CLERK'S COPY.

166

85796

U. S. S. C.

Vol. I

TRANSCRIPT OF RECORD

Supreme Court of the United States

OCTOBER TERM, 1937

No. 62

TEXTILE MACHINE WORKS, PETITIONER,

vs.

LOUIS HIRSCH TEXTILE MACHINES, INC.

ON WRIT OF CERTIORARI TO THE UNITED STATES CIRCUIT COURT OF APPEALS FOR THE SECOND CIRCUIT

PETITION FOR CERTIORARI FILED MAY 14, 1937.

CERTIORARI GRANTED JUNE 1, 1937.

SUPREME COURT OF THE UNITED STATES

OCTOBER TERM, 1937

No. 62

TEXTILE MACHINE WORKS, PETITIONER,

vs.

LOUIS HIRSCH TEXTILE MACHINES, INC.

ON WRIT OF CERTIORARI TO THE UNITED STATES CIRCUIT COURT OF APPEALS FOR THE SECOND CIRCUIT

VOL. I

INDEX.

	Original	Print
Record from D. C. U. S., Southern New York	1	1
Bill of complaint	1	1
Answer	7	5
Amendment to answer, dated September 18, 1934	14	9
Amendment to answer, dated December 6, 1934	16	16
Amendment to answer, dated March 23, 1935	18	11
Stipulation as to certain testimony	19	11
Narrative statement of evidence	20	12
Appearances	20	12
Opening statement for plaintiff	20	12
Stipulation as to certain facts, etc	21	13
Stipulation as to certain evidence	23	14
Testimony of Christian F. Meyer	25	16
Hugo Hemmerich	88	59
F. Elwood Struve	105	71
Paul Kroener	112	76
Christian F. Meyer (recalled)	117	79
Ferdinand Thun	167	117
George W. Goetsch	179	126

JUDD & DETWEILER (INC.), PRINTERS, WASHINGTON, D. C., AUGUST 24, 1937.

	Original	Print
Record from D. C. U. S., Southern New York—Continued.		
Narrative statement of evidence—Continued.		
Stipulation re testimony of Paul Kroener	187	132
Testimony of Max C. Miller	188	133
Louis Hirsch	317	222
Alfred Friedman	327	229
Carl E. Weinberg	329	230
Alfred E. Ischinger	339	237
Mary Hargan	347	242
Otto. Huber	351	246
Christian F. Meyer (recalled)	356	249
Otto Hamel	433	300
Ralph H. Greiss	439	304
Christian F. Meyer (recalled)	444	308
Alfred E. Ischinger (recalled)	470	326
J. Lester Lincoln	478	331
Ray F. Borda	481	333
Alfred M. Hahn	483	334
Alfred Friedman (recalled)	484	335
Stipulation and order approving narrative statement of evidence	494	342
Plaintiff's Exhibits:		
1—Schletter patent in suit, No. 1,713,628	495	343
2—Set of photographs attached to stipulation.	505	354
10—Drawing showing carrier motion	516	365
15—Large drawing in perspective of Schletter attachment	517	366
16—Large drawing of Figure 10 of patent showing how it is done	518	367
18—Large drawing showing insert in center of stocking	519	368
20—Large drawing showing work called "Shadow Clock" like Patent 1,531,349	520	369
24—Large drawing showing window clock design	521	370
25—Large drawing of selvage reinforcement	522	371
28—Large drawing of cradle foot	523	372
32—"Reading" record of 1930	524	373
33—Large perspective drawing showing commercial form of plaintiff's attachment	532	381
34—Large drawing of Defendant's attachment:	533	382
35—Large drawing of Hofmann attachment	534	383
36—List of attachments sold by Textile (Kroner testimony)	535	385
37—Grosser license	538	387
39—Schletter patent, No. 1,531,349	545	393
48—Drawing produced by Myers on rebuttal to show limitations of Oesterreich patent	552	401
49—Drawing produced by Myers on rebuttal to show limitations of Oesterreich patent	553	402

	Original	Print
Record from D. C. U. S., Southern New York—Continued.		
Narrative statement of evidence—Continued.		
Plaintiff's Exhibits—Continued:		
50—Drawing produced by Myers on rebuttal to show limitations of Oesterreich patent...	554	403
52—Design of spliced Pointex heel.....	555	404
53—List of sales of Bitzer attachment.....	557	405
54—Photographs of Plaintiff's experimental machine showing Schletter's attachment....	558	407
56—Cecka patent, No. 1,213,333.....	560	412
57—Sowter British patent, No. 18,461 of 1888..	571	420
Defendant's Exhibits:		
"B"—Advertisement of Textile of an attachment	577	426
"C"—Advertisement of Textile of an attachment published in Textile World.....	580	429
"D"—Page 186-1 from Parts Catalog.....	581	430
"E"—Bitzer patent, No. 1,938,207.....	582	431
"F"—Schletter patent, No. 1,752,296.....	592	441
"H"—Drawing No. 1 prior art spindles and carrier (Miller)	600	450
"I"—Four photographs of Seyfert & Donner Lamb type of machine.....	601	451
"L"—Marked copy of patent in suit showing changes	607	455
"M"—Drawings of Hirsch's structure.....	615	465
"N"—U. S. prior art patents.....	618	468
Cecka, No. 1,180,568	619	469
Cecka, No. 1,217,411.....	624	474a
Chipman, No. 1,163,970.....	627	475
Gee, No. 1,014,753.....	653	502
Kilbourn, No. 19,370.....	656	506
Landenberger, No. 1,134,749.....	665	516
Lieberknecht, No. 981,663.....	679	531
Muller, No. 1,564,438.....	689	542
Oesterreich, No. 1,644,688.....	694	548
Rowlett, No. 500,953.....	703	558
Sowter, No. 478,527.....	724	580
Schletter, No. 1,198,482.....	728	585
Zwicky, No. 1,608,285.....	737	595
"Q"—Mather British patent, No. 7476 of 1837..	743	603
"R"—Depass British patent, No. 10,405 of 1884	763	623
"S"—Roe British patent, No. 1991 of 1869.....	771	631
"T"—Willatt et al. British patent, No. 573 of 1871	784	644
"U"—Laue & Timaeus German patent, No. 21,332	794	654
Translation	796	657
"V"—Black British patent, No. 13,905 of 1887..	804	664
"W"—Woodward & Shaw British patent, No. 19,627 of 1891.....	811	671

	Original	Print
Record from D. C. U. S., Southern New York—Continued.		
Narrative statement of evidence—Continued.		
Defendant's Exhibits—Continued:		
"X"—Lamb & Noon British patent, No. 15,129 of 1889	815	675
"Y"—Claringburn British patent, No. 4,967 of 1890	824	684
"Z"—Colored prints of Lamb & Noon patent	833	693
"A-1"—Claringburn British patent, No. 7068 of 1891	835	695
"B-1"—Lieberknecht German patent, No. 117,153	839	699
Translation	841	701
"C-1"—Cotton British patent, No. 208,362 of 1923	845	704
"D-1"—Chamberlain article "Knitting Mathematics and Mechanisms"	849	708
"E-1"—Spindles of prior art—Sheet 1	853	712
"F-1"—Spindles and carriers—Sheet 2	854	713
"H-1"—Drawings of herringbone suture—Figs. 1 to 9	855	714
"J-1"—Drawing of herringbone split—C-1 and C-1A	864	723
"M-1"—4 needle lap drawing	865	724
"O-1"—2 needle lap drawing	866	725
"C-2"—Rosedale order—German photostat and translation	867	727
"D-2"—Rosedale invoice of March 12, 1928	868	729
"F-2"—Drawing introduced by Weinberg	869	730
"L-2"—Photographs of defendant's demonstration machine set up for trial	870	731
Opinion, Lindley, D. J.	877	737
Findings of fact and conclusions of law	902	754
Petition for rehearing	906	756
Answer to petition for rehearing	910	759
Order denying petition for rehearing	914	761
Interlocutory decree	915	762
Petition for appeal	917	763
Allowance of appeal	918	764
Assignment of errors	919	764
Citation (omitted in printing)	921	
Stipulation as to contents of record	922	766
Stipulation as to correctness of record	925	767
Clerk's certificate (omitted in printing)	926	
Proceedings in U. S. C. C. A., Second Circuit	927	769
Opinion, Hand, J.	927	769
Judgment	930	774
Petition for rehearing (omitted in printing)	932-941	
Orders denying petition for rehearing	942	775
Clerk's certificate	945	776
Order allowing certiorari	946	777
Stipulation and addition to record	947	777

	Original	Print
Record from D. C. U. S., Southern New York—Continued.		
Excerpts from Plaintiff's Exhibit 3—Record in Hoffman suit	949	778
Testimony of Elmer R. Roth	949	778
Paul Guenther	959	785
Frank Heyde	961	787
Frank Nobis	965	790
Max Gruner	966	791
Arthur W. Mutchler	970-a	795
Testimony of Percy Hockin	975	799
Adolph Hecker	976	800
Jacob Boch	978	801
Fred Drawert	994	814
Ferdinand Nusbaum	996	815
Defendant's Exhibits:		
"Q-1"—Photographs of attachment applied to knitting machine	1002	821
"V-1"—Photographs of attachment in use for full-fashioned knitting machine	1007	826
"Y-1"—Photographs of Nussbaum machines	1011	830
"T-1"—Perspective drawing of attachment	1020	839
"B-2"—Drawing of Nussbaum machine	1021	840
Clerk's certificate (omitted in printing)	1022	

[fol. 1]

IN UNITED STATES DISTRICT COURT, SOUTHERN DISTRICT OF NEW YORK

In Equity. No. 63-32

TEXTILE MACHINE WORKS, Plaintiff,

vs.

LOUIS HIRSCH TEXTILE MACHINES, INC., Defendant

BILL OF COMPLAINT

Textile Machine Works brings this Bill of Complaint against Louis Hirsch Textile Machines, Inc., and says:

1. The plaintiff, Textile Machine Works, is a corporation organized and existing under and by virtue of the laws of the State of Pennsylvania, with an established place of business at Wyomissing, County of Berks, in said State, and is a resident of said State. The defendant, Louis Hirsch Textile Machines, Inc., is a corporation organized and existing under and by virtue of the laws of the State of New York, with a principal place of business in the City of New York, in said State, and is a citizen of said State and an inhabitant of the Southern Judicial District thereof, at which place, and elsewhere in the United States, it has committed the acts of infringement hereinafter complained of.

2. This is a suit in equity, arising under the patent laws of the United States.

[fol. 2] 3. Heretofore, and prior to the 5th day of November, 1925, Richard E. Schletter, of Philadelphia, Pennsylvania, was the original, first and sole inventor of certain new and useful Improvements in Attachments for Flat-Knitting Machines, not known or used by others in this country before his invention thereof, and not patented or described in any printed publication in this or any foreign country before his invention thereof, or more than two years prior to his application for Letters Patent of the United States therefor, and not in public use, or on sale, in this country for more than two years before his application, and not abandoned by him, and not first patented or

caused to be patented by him, or his legal representatives, or assigns, in any foreign country upon an application filed more than twelve months prior to the filing of said application in this country.

4. On or about the 5th day of November, 1925, Richard E. Schletter made application in due form of law to the Commissioner of Patents of the United States, upon his said invention and duly made oath to the specification thereof. Thereafter, the said Richard E. Schletter did, by assignment dated November 3, 1925, and duly recorded in the United States Patent Office under date of November 5, 1925, assign and transfer to Schletter & Zander, Inc., a corporation of the State of Pennsylvania, its successors and assigns, all right, title and interest in said invention of Improvements in Attachments for Flat-Knitting Machines and the Letters Patent to issue therefor. Thereafter, the said Schletter & Zander, Inc., the Pennsylvania corporation, [fol. 3] did, by assignment dated April 9, 1929, and duly recorded in the United States Patent Office under date of April 26, 1929, assign and transfer to Schletter & Zander, Inc., a corporation of the State of Delaware, its successors and assigns, all right, title and interest in said invention, and the Letters Patent to issue therefor; whereupon such proceedings were had that on the 21st day of May, 1929, Letters Patent of the United States No. 1,713,628, were duly and regularly issued to the said Schletter & Zander, Inc., a Delaware corporation, as assignee by mesne assignment of the said Richard E. Schletter, as in and by said original Letters Patent No. 1,713,628, or a duly authenticated copy thereof, here in Court to be produced, will more fully and at large appear; whereby there was granted and secured to the said Schletter & Zander, Inc., the Delaware corporation, its successors and assigns, for the term of seventeen years from the 21st day of May, 1929, the exclusive right to make, use and sell said improvements within and throughout the United States.

5. Thereafter, to wit, on or about the 10th day of December, 1929, the said Schletter & Zander, Inc., a corporation of the State of Delaware, being then fully possessed of said Letters Patent No. 1,713,628, and of the exclusive rights granted thereby, did, by an assignment in writing, duly executed and delivered, and recorded in the United States Patent Office under date of December 20, 1929,

assign and transfer to the Plaintiff, Textile Machine Works, all right, title and interest in said Letters Patent No. 1,713,628, together with all exclusive rights thereto per- [fol. 4] taining, and said Schletter & Zander, Inc., whose corporate title has by due and regular proceedings been changed to Signature Hosiery Company, Inc., has also assigned and transferred to Plaintiff all rights of recovery for infringement of said Letters Patent occurring prior to the assignment thereof.

6. By virtue of the premises, Plaintiff now is, and continuously since the 10th day of December, 1929, has been possessed of the entire right, title and interest, legal and equitable, in and to said Letters Patent No. 1,713,628, in and to the exclusive rights thereby granted, within and throughout the entire United States and the territories thereof, and is also possessed of all rights of recovery for infringement of said Letters Patent from and after May 21, 1929, the date of issue thereof.

7. The Plaintiff has manufactured and sold, or caused to be manufactured and sold, large numbers of machines or devices embodying or employing the invention of said Letters Patent No. 1,713,628, and has expended, and now is expending large sums of money in said manufacture and sale; and the same are of great use and benefit to the public and of great value to the Plaintiff, and the public generally have acknowledged the utility and value thereof, and acquiesced in the validity of the said Letters Patent and of the exclusive rights of the Plaintiff therein.

8. The Defendant has been duly notified of said Letters [fol. 5] Patent and of the infringement thereof, hereinafter complained of, and has, as Plaintiff is informed and believes, continued, after such notice, said infringement.

9. On information and belief, Plaintiff avers that Defendant, well knowing the premises, and subsequently to the issuance of said Letters Patent No. 1,713,628, and prior to the commencement of this action, at New York City, and elsewhere within the United States, and without the license and against the will and consent of the Plaintiff, has made, or caused to be made, and sold, and offered for sale, and is now making and selling, or offering for sale, and threatens hereafter to continue to make and sell, machines embodying and employing the invention described in and

patented by said Letters Patent No. 1,713,628 in infringement of the claims thereof, and particularly in infringement of Claims 1, 3, 14 and 15 thereof, and in violation of the exclusive rights of the Plaintiff aforesaid.

10. Plaintiff is informed and believes, and therefore avers, that the said Defendant is prepared and ready to continue said infringement, and is continuing the same, and threatens hereafter to continue the same, and unless it is restrained from so doing, Plaintiff will suffer great and irreparable damage from the said unlawful acts, and that said Defendant has received, and still is receiving from said infringing acts great gains and profits, which in equity belong to the Plaintiff; and the amount of such gains and profits the Plaintiff does not know, and prays discovery thereof.

[fol. 6] Wherefore, Plaintiff prays:

(1) That an account be taken of the profits received by the Defendant and the damage to the Plaintiff in the premises.

(2) That the Defendant be ordered and decreed to pay over to the Plaintiff profits and gains received by the Defendant, and the damage suffered by the Plaintiff by reason of the infringement aforesaid.

(3) That the Defendant, its clerks, attorneys, agents, servants and workmen be enjoined and restrained, preliminarily until the hearing, and perpetually thereafter, from further infringement upon the said Letters Patent, and upon Plaintiff's exclusive rights in the premises.

(4) That the Plaintiff recover its costs to be taxed.

(5) Other relief.

(6) That a subpoena ad respondendum issue commanding the Defendant to appear and answer this Bill of Complaint.

Textile Machine Works, by Henry Janssen, President.

Attest: Ferdinand Thun, Secretary.

Howson & Howson, Solicitors for Plaintiff, 1 Cedar Street, New York City. Charles H. Howson, of Counsel for Plaintiff.

[fol. 7] *Duly sworn to by Henry Janssen. Jurat omitted in printing.*

IN UNITED STATES DISTRICT COURT, SOUTHERN DISTRICT OF NEW YORK

[Title omitted]

ANSWER

The defendant for its answer to the bill of complaint of the plaintiff, or as much thereof as it is advised is necessary to be answered, states:

[fol. 8] (1) The defendant admits the allegations of the first two paragraphs of the bill of complaint, except that it denies that it has committed any infringing acts in the Judicial District of the Southern District of New York or elsewhere.

(2) With respect to the allegations contained in paragraphs 3, 4, 5 and 6 of the bill of complaint concerning the issue and ownership of Letters Patent No. 1,713,628 the defendant admits that Letters Patent so numbered were issued on May 21, 1929, to Schletter & Zander, Inc., a Delaware corporation, as assignee by mesne assignment of Richard E. Schletter, but this defendant, on information and belief, denies that said Schletter was the inventor of the improvements, in attachments for Flat Knitting Machines described in said Letters Patent; denies that the same was not known or used by others before his alleged invention thereof; denies that the same was not patented or described in any printed publication in this or any foreign country before his alleged invention thereof or more than two years before the filing of his application for Letters Patent therefor; denies that the same was not in public use or on sale in the United States before his alleged invention thereof or more than two years before he filed his application for Letters Patent therefor; denies that the same had not been abandoned; denies that said Letters Patent were or are valid; and in connection therewith this defendant avers, upon information and belief, that said Schletter abandoned his said alleged invention and any and all his rights therein, and did not attempt

[fol. 9] to assert any claim thereto until after others had independently made large investments in connection with the manufacture and sale to the public in the United States of attachments embodying said alleged invention, and was at the time of his said application and the Letters Patent issued thereon barred by his abandonment, lack of diligence and inaction from asserting any claim therein or thereto. The defendant further states that it is without sufficient information to form a belief as to the allegations contained in paragraphs 5 and 6 of the bill of complaint and therefore denies the same.

(3) The defendant denies each and every allegation contained in paragraph 7 of the bill of complaint.

(4) The defendant admits that it received a notice from the plaintiff of an alleged infringement by it of Letters Patent No. 1,713,628 but it denies that it has infringed or is now infringing upon the same.

(5) The defendant denies each and every allegation contained in paragraphs 9 and 10 of the bill of complaint.

(6) The defendant is informed and believes and therefore avers, that said Letters Patent No. 1,713,628 was and is invalid and void because the alleged invention or discovery described and claimed therein, and all material and substantial parts thereof, had been, prior to the date of the alleged invention or discovery thereof by Richard E. Schletter, described and published, patented or described and con-
[fol. 10] tained in the following Letters Patent and/or other printed publications:

United States Patents

No. 980, April 9, 1861, J. K. & E. E. Kilbourn;
47,829, May 23, 1865, E. E. Kilbourn;
411,113, Sept. 17, 1889, G. Templeman;
408,561, Aug. 6, 1889, Wilcomb;
402,230, May 28, 1889, Scott & Williams;
878,724, Feb. 11, 1908, Guenther;
981,663, Jan. 17, 1911, Lieberknecht;
1,014,753, Jan. 16, 1912, Gee;
1,134,749, Apr. 6, 1915, Landenberger;
1,180,568, Apr. 25, 1916, Cecka;
1,198,482, Sept. 19, 1916, Schletter;

1,217,411, Feb. 27, 1917, Cecka;
1,564,438, Dec. 8, 1925, Muller;
1,547,501, July 28, 1925, Lack, et al.;
1,601,545, Sept. 28, 1926, Werfelman, et al.;
1,608,285, Nov. 23, 1926, Zwicky.

British Patents

No. 2,255, 1882, J. & H. Kiddier;
18,625, 1888, Templeman;
6,620, 1888, Templeman;
2,127, 1888, Aldridge;
18,461, 1888, Soroter;
15,129, 1889, Lamb, et al.;
4,967, 1890, Claringburns;
[illegible],627, 1891, Woodward;
7,068, 1891, Claringburns;
1,008, 1909, Greenhalgh;
208,362, 1923, Cotton;
997, 1859, Kilbourn & Kilbourn.

[fol. 11] German Patents

No. 6,273, July 19, 1878, Lamb & Lowe;
101,509, Mar. 15, 1898, Kunze;
138,709, Sept. 17, 1901, Hilscher;
153,673, Apr. 12, 1903, Richter;
331,506, Apr. 16, 1914, Schubert & Salzer;
330,731, Apr. 14, 1914, Schubert & Salzer;
139,073, Dec. 16, 1914, Max Ludwig;
(Gebrachsmuster) 242,936, Jan. 25, 1905, Ludwig.

French Patents

162,313, May 23, 1884, Lang & Chauvin;
411,580, June 20, 1910, Greenhalgh & Smith.

Publications

"Full Fashioned Knitting Machines," published by Textile Machine Works of Reading, Pa., in 1920.

(7) The defendant is informed and believes, and therefore avers, that said Letters Patent No. 1,713,628 was and is void and of no effect in law in that the alleged invention or improvement described therein was in public use in the United States before the alleged invention by the said Rich-

ard E. Schletter, for more than two years prior to the application for said patent, and defendant further alleges that said alleged invention was known to, or used by others in the United States before the alleged invention of said Schletter. The names of such users and those having such knowledge, and the places of such public users are as follows

[fol. 12] Julius Kayser & Company of New York City, N. Y.
Textile Machine Works of Reading, Pa.
Frank Heyde, c/o Julius Kayser & Co., Brooklyn, N. Y.
A. Leopold, c/o Julius Kayser & Co., Brooklyn, N. Y.
John Beecherdt, c/o Merit Hosiery Co., Ozone Park, Long Island, N. Y.
Onyx Hosiery Company of Dover, N. J.
D. Nussbaum & Co., 8300 Atlantic Ave., Ozone Park, Long Island, N. Y.
F. Nussbaum, 8300 Atlantic Ave., Ozone Park, Long Island, N. Y.
J. Boch, 8300 Atlantic Ave., Ozone Park, Long Island, N. Y.

(8) The defendant is informed and believes, and therefore avers that the said Letters Patent was and is invalid and void because the alleged invention purported to be patented thereby did not constitute patentable knowledge or invention within the meaning of the patent laws in view of the prior state of the art, and in view of what was common knowledge on the part of those skilled in the art, all prior to the time of the alleged invention of the said Letters Patent No. 1,713,628 by the applicant thereof, which prior art and prior knowledge defendant is ready to aver, maintain and prove.

(9) Further answering, this defendant, on information and belief, avers that more than two years prior to the application of said Schletter for said Letters Patent No. 1,713,628 the alleged invention therein described and claimed [fol. 13] was in public use in this country at the factory of the Brentmore Knitting Mills at Philadelphia, Pa.

(10) Further answering, the defendant avers, upon information and belief, that the plaintiff is not entitled to the relief prayed for, or to any relief, because of its laches and the laches of its predecessors in title.

(11) The defendant denies that plaintiff is entitled to any injunction or to profits or damages or to an accounting, or any other relief, and hence prays to be dismissed, with its reasonable costs and charges in this behalf most wrongfully sustained.

Louis Hirsch Textile Machines, Inc., by Louis Hirsch.

Attest: D. D'A. Berger, Secretary. Darby & Darby, Solicitors for Defendant.

Duly sworn to by Louis Hirsch. Jurat omitted in printing.

[fol. 14] IN UNITED STATES DISTRICT COURT, SOUTHERN DISTRICT OF NEW YORK

[Title omitted]

AMENDMENT TO ANSWER DATED SEPTEMBER 18, 1934

Add the following patents in paragraph 6 of the answer under the subheading "British Patents":

No. 1991, 1882, Roe;
7476, 1837, Mather;
3123, 1864, Cotton;
3068, 1871, Lamb.

Insert the following after paragraph 8 of the answer:

[fol. 15] 8A. Further answering, this defendant on information and belief, alleges that if the said patent discloses patentable invention (which is elsewhere herein denied) then and in that event the patent is wholly void and invalid because the said patentee is not the original and first inventor of the subject matter thereof, the same having been first invented by others than the patentee and who were using due diligence to reduce the said invention to practice as follows:

J. Muller, of and at Brooklyn, County of Kings, and State of New York.

Dietrick J. Werfelman and Anton Strelz, of and at Brooklyn, County of Kings, and State of New York.

Melchior Zwicky, of and at Wyomissing, Pennsylvania.

As evidence of prior invention by the above enumerated individuals defendant will rely on the patents issued to them as follows:

Muller patent No. 1,564,488, granted December 8, 1925, on application filed October 20, 1923.

Werfelman and Strelz Patent No. 1,601,545, granted September 28, 1926, on application filed January 16, 1925.

Zwicky patent No. 1,608,285, granted November 23, 1926, on application filed July 21, 1923.

Insert the following after paragraph 9 of the answer:

9A. Further answering, this defendant alleges that the Letters Patent in suit is void and invalid on its face as be- [fol. 16] ing devoid of patentable subject matter in that no operative structure is therein shown or described.

Dated, New York, N. Y., September 18, 1934.

(Signed) Darby & Darby, Attorneys for Defendant.

IN UNITED STATES DISTRICT COURT, SOUTHERN DISTRICT OF NEW YORK

[Title omitted]

AMENDMENT TO ANSWER DATED DECEMBER 6, 1934

Add the following patents in paragraph 6 of the answer under the subheading "United States Patents":

No. 19,370, 1858, J. K. & E. E. Kilbourne;
500,953, July 4, 1893, W. T. Rowlett;
1,163,970, Dec. 14, 1915, Evan Chipman.

Add to same paragraph under the subheading "British Patents":

No. 10,405, July 21, 1884, Ernest de Pass;
573, Mar. 3, 1871, Henry Willatt, et al.

[fol. 17] Add to the same paragraph under the subheading "German Patents";

No. 117,153, 1900, Theodore Leiberknecht;
21,332, Dec. 2, 1881, Lane & Timaeus.

Add to paragraph 7 of the answer the following names:

Torresdale Hosiery Co. of Kensington Avenue and Erie Avenue, Philadelphia, Pa.
Adolf Schubert of Kensington Avenue and Erie Avenue, Philadelphia, Pa.
Hans Vetterman of Kensington Avenue and Erie Avenue, Philadelphia, Pa.
Lewis Beckert of Foxchase Knitting Mills, 27 Girard Ave., Philadelphia, Pa.

(Signed) Darby & Darby, Attorneys for Defendant.

Dated, New York, N. Y., December 6, 1934.

[fol. 18] In United States District Court, Southern District of New York

[Title omitted]

Amendment to Answer Dated March 23, 1935

Add the following to Paragraph 6 of the answer under the subheading Publications:

"Knitting Mathematics and Mechanisms," by John Chamberlain, prepared for the Textile Trades Advisory Committee of the City of Leicester Municipal Technical and Art Schools. Published by J. W. Hemmings' Capey, Printers, Charles Street, 1923. Title page and pages 125, 126 and 127.

(Signed) Darby & Darby, Counsel for Defendant.

Dated, New York, N. Y., March 23, 1935.

[fol. 19] In United States District Court, Southern District of New York

[Title omitted]

Stipulation as to Certain Testimony

It is hereby stipulated by and between counsel for the respective parties in the above-entitled suit, that either party may offer in evidence in this suit the complete testi-

mony (including all exhibits) of Sidney Mayer; Floyd E. Groff; William J. Jackson; Walter A. Stewart; Elmer R. Roth; Paul Guenther; Frank Heyde; Max Gruener; Arthur W. Mutchler; Percy Hockin; Adolph Hecker; Jacob Bock; Fred Drawert; and Ferdinand Nussbaum who testified in behalf of the party offering such evidence in the case of Textile Machine Works versus Alfred Hofmann, Inc., In Equity No. 4219 in the United States District Court for the District of New Jersey.

Such testimony may be received with the same force and effect as though the witness so testified in this cause in behalf of the party offering the same.

Howson & Howson, Attorneys for Plaintiff. Darby & Darby, Attorneys for Defendant.

Dated, November 27, 1934.

[fol. 20] In United States District Court, Southern District of New York

In Equity. No. 63-32

Textile Machine Works, Plaintiff,

vs.

Louis Hirsch Textile Machines, Inc., Defendant

Narrative Statement of Evidence

Before Hon. Walter C. Lindley, District Judge

New York, October 7th, 1935, 10:30 a. m.

Appearances

Howson & Howson, Esqrs., Solicitors for Plaintiff; Dexter N. Shaw, Esq., and Charles H. Howson, Esq., of Counsel.

Darby & Darby, Esqrs., Solicitors for Defendant; Samuel E. Darby, Jr., Esq., and Walter A. Darby, Esq., of Counsel.

Opening Statement for Plaintiff

Mr. Howson: I will indicate on the patent, if it has not already been done, the claims involved which are Claims 1, 3, 14 and 15 in suit.

[fol. 21] Plaintiff's Prima Facie Proofs

Mr. Howson: We offer in evidence a printed Patent Office copy of the Schletter patent, No. 1,713,628, in suit, and ask that it be marked Exhibit 1.

(Marked Plaintiff's Exhibit 1.)

STIPULATION AS TO CERTAIN FACTS, ETC.

Mr. Howson: I have here a stipulation which I wish to make of record. It reads as follows:

"It is stipulated and agreed by and between the parties to the above-entitled cause, as follows:

"1. That incorporation of plaintiff and defendant, Louis Hirsch Textile Machines, Inc., as pleaded in the bill of complaint, may be taken as proved.

"2. That title of patent to Schletter, No. 1,713,628, granted May 21, 1929, being the patent in suit, is in the Textile Machine Works, together with all rights of recovery for infringement thereof since the date of the patent.

"3. That since the grant of the Schletter patent No. 1,713,628, and subsequent to the 30th day of June, 1930, and prior to the filing of the bill of complaint herein, defendant, Louis Hirsch Textile Machines, Inc., has without consent of the plaintiff sold within the United States full fashioned hosiery knitting machines, leggers and footers, provided with attachments, and attachments for such machines, said machines and attachments being the same in all substantial respects as those shown in the photographs attached hereto [fol. 22] and bearing the numbers 10018, 10019, 10020, 10021, 10022, 10040, 10041, 10042, 10043, 10044, 10045.

"4. That the defendant on or about the 30th day of June, 1930, received from W. G. Stewart, attorney for Textile Machine Works, the plaintiff herein, a notice reading as follows:

June thirtieth, 1930.

"Louis Hirsch Textile Machines Inc., 47 West 34th Street, New York City.

DEAR SIRS:

Replies received to our recent notices sent on behalf of The Textile Machine Works, to users of your 'Karl Lieber-

knecht or Kalis Full Fashioned Hosiery Machines'—alleging infringement particularly of their patent No. 1,713,628, indicate your acceptance of responsibility in the matter.

"Mr. Ferdinand Thun asks us to propose to Mr. Louis Hirsch a conference with him at the Textile Machine Works, with a view to generally discussing and determining action before his departure for Europe on July 15;—that is on or about Monday July 7, if this week is inconvenient because of July 4. Counsel will be welcome if desire.

"Will you please promptly advise us, or Mr. Thun direct, as to your attitude and convenience with regard to this suggestion.

"Respectfully, —— ——.

[fol. 23] "5. That printed or photographic copies of patents, including the patent in suit, and publications, may be offered in evidence and used with the same force and effect as certified copies, subject to correction, if error shall appear; and the dates of filing appearing on patents and dates and places of publication appearing upon publications so offered may be taken as prima facie correct, but subject to correction.

"6. That translations of foreign patents may be offered in evidence and such translations accepted subject to correction, if error shall appear.

(Signed) Howson & Howson, Attorneys for Plaintiff. (Signed) Darby & Darby, Attorneys for Defendant.

Dated: October 10, 1934."

I offer in evidence, with the request that it be marked as Exhibit 2, the set of photographs referred to in this stipulation which has just been read.

(Marked Plaintiff's Exhibit 2.)

Mr. Howson: There is another stipulation here which I also wish to make part of the record. It is not long and I will read it:

STIPULATION AS TO CERTAIN EVIDENCE

"By and between counsel for the respective parties, it is stipulated and agreed:

"(1) That the printed transcript of record (two volumes), prepared by the Clerk of the Court of Appeals for the Third Circuit in the suit of Alfred Hofmann, Inc., Defendant-Appellant, vs. Textile Machine Works, Plaintiff-Appellee, No. 5312, March Term, 1934, may, without certi-
[fol. 24] fication, be offered as a physical exhibit for the purpose of showing the issues and proceedings in the said suit in the Circuit Court of Appeals, and in the same case in the United States District Court for the District of New Jersey under the title Textile Machine Works vs. Alfred Hofmann, Inc., in Equity No. 4219.

"(2) That the statements of the testimony of Sidney Mayer, Floyd E. Groff, William J. Jackson, Walter A. Stewart, Elmer R. Roth, Paul Guenther, Frank Heyde, Max Gruener, Arthur W. Mutchler, Percy Hockin, Adolph Hecker, Jacob Bock, Fred Drawert and Ferdinand Nusbaum, or any of them, as contained in said printed transcript of record, may be offered and used in evidence in this suit in pursuance of the stipulation heretofore entered into between counsel, providing for the use in this suit of the testimony given by said witnesses in the former suit, with the same force and effect as if certified copy of said testimony, in the form of question and answer as given at the trial in the District Court, were produced and offered.

"(3) That reports of the opinions of the United States District Court for the District of New Jersey, and the United States Court of Appeals for the Third Circuit, as appearing respectively in 4 Fed. Suppl., 837; and 71 Fed. (2nd), 973, may be referred to and used in evidence in this case as competent evidence of said opinions.

"(Signed) Howson & Howson, Attorneys for Plaintiff. (Signed) Darby & Darby, Attorneys for Defendant.

March 23rd, 1935."

[fol. 25] We offer in evidence as Exhibit 3 the Hofmann record referred to in the stipulation which has just been read, Volumes 1 and 2.

(Marked Plaintiff's Exhibit 3.)

Mr. Howson: It is agreed as a fact that the defendant in the former suit against Hofmann filed an application for

writ of certiorari to the Supreme Court from the decision of the decree of the Circuit Court of Appeals of the Third Circuit, which application for writ of certiorari was duly presented and refused.

CHRISTIAN F. MEYER, called as a witness on behalf of the plaintiff, having been first duly sworn, testified as follows:

Direct examination.

By Mr. Howson:

The Witness: I am 54 years old and I live at Wyomissing, Pennsylvania, 1408 Garfield Avenue; my occupation is mechanical engineer.

I am in the employ of the Textile Machine Works, one of the parties to this case. I am chief engineer. I have been in the employ of the Textile Machine Works for the last 26 years. From 1909 until 1918, I was occupied with the design and construction of full-fashioned knitting machines of the type which are described here today. In 1918 I came in charge of the entire engineering department and also of the patent matters of the Textile Machine Works.

The business of Textile Machine Works is principally the manufacture of full-fashioned knitting machines. It is a [fol. 26] very substantial concern. It has about three thousand employes. It is located at Wyomissing, just outside of Reading.

As to my experience and familiarity with letters patent relating to knitting machinery and the like, I will say that in my capacity as chief of the engineering department I had to supervise the drawings, the specifications, of the patents which were taken out by the Textile Machine Works. I took these up with our patent attorneys and followed them up as they went along, and finally had to approve them before they went to the Patent Office. I did that until 1928, when a patent attorney, Mr. Ischinger, was employed to establish a separate patent department. But even then I was in daily contact with the patent matters because we created a Patent Committee which was in charge of all patent matters pertaining to the machinery built by the Textile.

As to my technical education, I will say that I graduated from the Technical High School in Hamburg, in Germany.

I have read the patent in suit, No. 1,713,628, and I think I understand it. The title of the patent is, "Attachment for flat knitting machines." I will state what is meant in general by the term "flat knitting machines." Generally speaking, a flat knitting machine is a machine which has needles arranged in a straight row.

As to what other types of knitting machines there are besides flat knitting machines, I will say, using a general expression again, that there are circular knitting machines which are the direct opposite to the flat machines, although even there that does not hold out exactly. There are some [fol. 27] circular machines which produce a flat fabric by not completing the circular motion, but oscillating, and there are also flat machines which produce a tubular fabric, so-called Lamb machines.

Generally speaking the flat machine is one that knits the blank as a flat blank as distinguished from one which knits as a tube.

In these specifications there is also reference to a straight knitting machine. A straight knitting machine is substantially the same as a flat machine. Either expression is used in the trade.

The specification of the patent in suit, line 1, page 1, stated:

"This invention generally stated has relation to flat knitting machines for making hosiery of full-fashioned type,"

and at line 24 of page 1, the patent states:

"It is an object of my invention to provide attachments for full-fashioned knitting machines."

I will explain what is meant by hosiery of full-fashioned type.

Hosiery of full-fashioned type is hosiery which is knitted in a flat blank and in which the narrowing or the shaping of the blank takes place by the actual transfer of loops from the outer edge of the fabric towards the center of it in forming and narrowing the fabric down to the desired shape. That holds also for the foot which is shaped in the same way and in that way gives an almost perfect form to fit the human foot.

[fol. 28] I produce an illustration of the blanks to which I have been referring.

This here is a blank knit which is narrowed down so that it will be lesser width than where it started out. Up here it is usually 13 to 14 inches wide and down here it is three or four inches less, and that is done by transferring the loops, or, as it is called in the trade, narrowing, which may be seen here—small points where the loops have been laid on top of the others. (Witness indicates and illustrates.)

This is a leg blank and this is a complete stocking formed in its flat condition. Afterwards it is seamed together by special machinery which I will explain later—the foot is added to the leg.

Mr. Howson: The specimens referred to by the witness are offered in evidence as Plaintiff's Exhibits 4 and 5.

(Marked Plaintiff's Exhibits 4 and 5.)

The Witness: Those fashion marks, that I called his Honor's attention to, are known as narrowing marks. The presence of those marks indicate a full-fashioned stocking as distinguished from a stocking of some other make. That is one of the distinguishing marks of a full-fashioned stocking. This fashioning is done on a full-fashioned machine by machinery by actual transfer of loops. On some other machines, straight machines, narrowing is accomplished by a different method. But the characteristic of that full-fashioned hosiery is that the narrowing is always done by actual transfer of loops.

Referring again to the patent, the patentee says at page 1, line 81:

[fol. 29] "Fig. 1 is a view in front elevation of a portion of one type of full-fashioned knitting machine known as the 'Cotton' machine";

I will state what is meant by the reference to the "Cotton" machine.

The Cotton machine is a machine of a straight type, generally known today as the full-fashioned hosiery machine. It derives its name from the inventor, William Cotton, who had it patented in England in 1864, and the characteristics of that machine are, as I explained before, that the loops of the fabrics which are made on the machine are transferred by actual motion of the loops to adjoining needles.

Another characteristic is that they have cooperating carrier rods and consist of a number of sections—all sections making the same stocking blank at the same time and each one of these sections having one of the carriers. These carriers are mounted on long steel rods usually eight in a machine and having a number of sections from 20 up to 28, and perhaps more. Now, in a machine of 20 sections with 8 carrier rods there are 160 carriers of course and the same proportion holds for machines of other lengths and number of carrier rods. Perhaps it is proper here to mention that the Cotton machine derives its power from one source. That is the so-called cam shaft on which all the actuating cams are mounted.

In the specification on page 2, after referring to the machine shown in the drawings, the patentee says:

[fol. 30] "Such machine may be of any well known full-fashioned knitting machine type and to such my novel attachment is connected."

I will state what different types of full-fashioned knitting machines there are.

There is only one type of full-fashioned knitting machine. I think that the inventor undoubtedly meant different manufacturers when he said different types, as for instance Schubert & Salzer, Hilscher, Lieberknecht and others in Germany, and Wildman in this country.

I can not state from an examination of the drawings of the patent which make of full-fashioned machine is there described. That is very difficult. The machines appear very much alike.

By the Court:

Q. You mean that they follow the Cotton patent—the characteristics of the Cotton machine?

A. The characteristics of the Cotton machine, only the different parts having different shapes. Those parts not being in the patent, it is impossible to say which particular machine that patent was shown on. But there is no mistake that it is a Cotton full-fashioned machine.

I will explain the general construction and operation of a full-fashioned hosiery machine such as is illustrated in this Schletter patent in suit. That is, I will explain so much thereof as has a bearing on the subject matter here in suit.

In doing that, I would like to refer to a publication which was issued by the Textile Machine Works in 1920 and which gives a good idea of the general construction and operation [fol. 31] of the machine.

Mr. Howson: I offer in evidence the booklet that the witness has just referred to, as a publication of Textile Machine Works, as Exhibit 6, and Mr. Darby agrees that we can stipulate that that book was published at least as early as 1920.

Mr. Darby: Published and distributed.

Mr. Howson: Published and distributed as early as 1920.

(Marked Plaintiff's Exhibit 6.)

The Witness: I shall again refer to the stocking as shown here. It shows here the leg; under the leg it has two short extensions marked AA on page 11. These short extensions AA are known as the heel tabs. After this leg blank is made in that form these heel tabs are turned around into a straight line, giving this bag which is shown there, and which forms the heel afterwards—the round part of the heel. Along this line the stocking is then put on a so-called transfer bar of which I have here an actual bar. This is the transfer bar. There is a straight line here and as shown here it is fastened on these needles; this transfer bar is placed in the footing machine; the footing machine begins at this line, thus completing the stocking. Stockings like that are made on a machine of which we had a photograph here. That is a typical section. This particular machine being of 24 sections and 45 gauge. By the gauge of a machine is meant the number of needles per inch, or in other words, the fineness of the fabric which the machine turns out. This ma- [fol. 32] chine being 45 gauge, does not mean, however, that it has 45 needles, but the number of needles in a gauge is determined by multiplying the gauge number by two-thirds which gives in this case thirty needles. That originated in England. Two needles were cast into lead blocks and the number of such lead blocks in three English inches determined the gauge numbers. That determination has been kept until today. It is perhaps interesting to mention here that the first power knitting machine was invented by Lee, an English clergyman, and that at the time he invented his machine it was quite customary for men and women to hand-knit. At that time a good handknitter could make about a hundred loops per minute. This first machine could make

200 and the second machine 400; a machine like this running at 65 revolutions per minute can make a little over 600,000 loops per minute. Formerly stockings were almost exclusively knitted from cotton and it is only within the last twenty years that the use of silk has been gradually on the increase, until today almost all full-fashioned stockings are made from silk. There are few exceptions to the rule. The silk is brought to the machine in the form of cones which are wound by special winding machines, and put in the rear as shown by the next picture.

Mr. Howson: I will state that the illustration referred to by the witness showing three blanks is the same as that found on page 11 of Plaintiff's Exhibit 6.

Mr. Howson: I offer in evidence the illustration of the [fol. 33] knitting machine itself referred to by the witness as Plaintiff's Exhibit 7.

(Marked Plaintiff's Exhibit 7.)

Q. In view of that, I will ask you, Mr. Witness, if you have occasion to refer to any of these drawings which are simply enlargements of views shown in your circular, you will state that, so that the record will show exactly what you are referring to.

By the Court:

Q. That is the same as on page 12, isn't it?

A. That is correct. That is an enlargement of the illustration on page 12. This drawing is an enlargement of the drawing on page 12 of the publication, Plaintiff's Exhibit 6. The silk cones are put on the rear of the machine in so-called humidifying boxes which are necessary to keep the flexibility of the silk; then they are led over a number of guards and tension devices into the so-called carriers which are marked H on this drawing. The completed fabric is taken off the needles by a draw-off roller P, which in turn is operated by weights R, which are connected to the take-off roller by a rope which exerts the necessary pull to take the fabric off the needles. That pull has to be altered according to certain conditions which will be referred to later.

These carriers H are shown on the next drawing, this drawing being an enlargement of Figs. 5, 6 and 7 in the publication, Plaintiff's Exhibit 6, on pages 14, 15 and 16 respectively.

This black line here shows the thread running from the devices which I have just described into the carrier H, and [fol. 34] being fed by the carrier over the entire width, or part of the width, as the occasion may require, of a section. The first operation in forming the loops which the machine produces is to lay the thread in front of the needle as shown by Fig. 5.

We have here a model made which will make it a little clearer than the drawing might. Now, these are the needles; the thread is laid right on the noses of these steel slides which are known as sinkers and the dividers. The sinkers—jack sinkers they are called—are moved one by one by a certain motion which passes along the rear of the machine in this way and each second slide advances, so that a loop is formed in alternate spaces between needles. In here (indicating) there is no loop formed for the time being; the thread, in order to do that, is robbed from the carrier and when this has taken place over the entire length of the machine, the so-called dividers advance simultaneously and form a loop for each needle; that is, there is a complete row of loops now. When the loops are in this formation, the needles are going down against the so-called presser edge, which I will explain a little better later and come down through the old loops and are drawn up like that, so that the new loop is drawn through the old one. I can explain that again after we have looked at the drawings perhaps.

This is the shape of the needle. It is very much enlarged.

The Court: What is the normal size of the needle in the machine?

The Witness: I have an actual needle here. This is the [fol. 35] actual size. In a machine of this type there are nearly ten thousand of these needles. This is the shape of the needle and the thread is led here and the needle comes down, the thread slips under here and after that has happened this part of the needle is pressed against the presser edge and closes, so that it is like a sewing needle, when it continues down the old fabric will go up the shank of the needle; it draws the loop through it and comes up again after the new row of loops is completed. The drawing Fig. 5 shows the thread led in front of the needles. Fig. 6 shows the sinkers A have advanced to form a loop between every alternate needle, one by one.

Then Fig. 7 shows how the dividers advance simultaneously to form a loop around every needle. In Fig. 8 right in the front, right near the A on the right hand side it shows the needle beards are pressed against the presser edge closing them, making them in appearance and action like a sewing needle. In Fig. 9 it shows how the loops which are now hanging in the beards of the needles all the way up, that is the new loops, while the old loops are closing the needles. The old loops have been entered by the beards and are closing them now and the new loops are hanging up here. Then the needles are going down and draw the new loops through the old ones in that form as shown in Fig. 10, thus completing a new row of loops.

Mr. Howson: I will just state for the record that Figs. [fol. 36] 5, 6, 7, 8, 9 and 10 referred to by the witness are the figures from Plaintiff's Exhibit 6, and I offer in evidence the model referred to by the witness during the course of his answer as Exhibit 8.

(Marked Plaintiff's Exhibit 8.)

Mr. Howson: I also offer the illustrative board which shows the actual size of the needles, and so on.

(Marked Plaintiff's Exhibit 9.)

The Witness: The mechanism to carry out all of these different motions and movements which I have just described is shown by this drawing which is an enlargement of the illustration No. 24 in the publication Exhibit 6.

This is quite a complicated array of levers, cams, and so on, which cause these different parts to make the motions which are required to do the work. I don't think it necessary to go into a very detailed description of this. I will just say that the green and red levers as well as cams which are marked here, in their combined action, control the motion of the needle bar, whereas the blue in the front as well as in the rear control the motion of what is called the catch bar, which in turn moves the sinkers and dividers forward and backward as may be necessary.

The main thing I want to call attention to in showing this drawing is the fact that all these movements are operated from the cam shaft, the cam shaft being a long shaft running through the entire length of the machine and mounted somewhat in the lower part of the machine and not only for this

[fol. 37] motion but for any other one which may be brought to your Honor's attention during this trial, the motion is derived which drives all parts of the machine, from there.

Now then we come to the carrier motion of which I have a drawing here. This drawing is not in the publication Plaintiff's Exhibit 6. We made it later in order to explain the carrier motion. The carrier motion is, as the name implies, there to give the reciprocating motion to the carriers, to lay the thread for the respective sections of the machine. Here is such an actual carrier where the thread comes from the top, through the various guide holes, through a little tube which is shown in the lower end and from there is distributed along the sections of the machine. These carriers are shown marked as H in these drawings, being these blue extensions which are coming from the carrier rods. As I said before, each section has a carrier for each carrier rod. In other words, where there are eight carrier rods we have eight carriers in each section lying back of each other so that several of them can lay the thread at the same time over that section. Reciprocating motion is given to these carriers by so-called friction boxes; these green parts which are indiciated as E in the drawing. I also have a friction box here. This box is mounted on a rod—loosely mounted so that it can easily be pushed backward and forward. It has two shoes on either side, on the top and bottom against this rod here, and on either side also a spring; then it has a small cam lever here. When you close that the springs are compressed, friction contact is established to the rod blocks and the friction box is locked against that [fol. 38] rod, not immovably so but only to the extent that the friction contact holds it; the friction box is provided with a lever which is shown here marked in the drawings as F.

The Court: N is evidently the rod.

The Witness: Yes, N is the rod. The lever is shown by the letter F. Now, this friction box and this rod N are located in such a position in regard to the carrier rods, which are indicated here in cross-section with the carrier rods lying side by side in slots C which are provided for that purpose, and this friction box is located right in this position in such a way that this lever F can be pushed over any one of the rods here; each one of them is provided with what we call a dog, these little things here, and this little extension here in front of the lever fits into these

cut-outs, so the lever can be connected with any of the carrier rods.

A reciprocating motion is given to this rod N extending always over the full length of the sections. It can not be limited in any way. When one of these friction boxes is connected to the carrier rods and the frictional contact is put on, then this friction box goes along with the rod and takes the carrier rod along, and of course, the carrier, however, does not make the full width of the travel. It is limited. It sometimes makes only a very short part of the travel and when that happens the end or center part of the carrier rod is held and the friction box simply slides [fol. 39] through against the frictional contact, so that this rod N can complete its movement while the carrier rod is held by some stop, either in the middle or at the end of the machine. That is another advantage, that when the friction box is drawn through there is a certain resistance, I mean a certain pressure against the carrier rod and against the stop. That is quite essential and quite important, because these carrier rods being 30 or 40 feet long have quite some weight and quite some velocity and unless there would be some provision like that or some other provision, it would rebound when the stroke is stopped and by suddenly cutting off the reciprocating motion. There are, of course, a number of these friction boxes provided, sometimes several for one carrier rod, sometimes not so many, but a sufficient number of friction boxes so as to enable the operator to operate one or more carrier rods in conjunction. It may be that possibly one of these carrier rods are stopped in a certain position and another in another position, but that can be done regardless of the position of the stops which limit the stroke of the carrier rod. This is the stop in yellow, marked G, known as the end stop which are the regular stops in the machine limiting the complete or full stroke of the carrier rod across the width of the fabric being made at that time. For a partial movement of carrier rod there are other stops—various other stops which will be described later when we come to them.

Mr. Howson: I offer in evidence the drawing which has just been referred to by the witness—photostat of the drawing, as Plaintiff's Exhibit 10.

(Marked Plaintiff's Exhibit 10.)

[fol. 40] The Witness: Now, the next thing to be explained is the so-called Coulier motion. That is the motion which gives the reciprocating motion to the rod N from which the friction box and carrier rods are operated.

I have here an enlarged drawing of Fig. 22 in the publication Plaintiff's Exhibit 6 and enlarged figures or cut of Fig. 21 in the publication (Plaintiff's Exhibit 6) showing the same thing.

Now this rod N to which I have referred in the carrier motion appears again in the enlargement Fig. 21 and is also marked N there. It is rigidly fastened into a bracket K which slides on a bar running the entire length of the machine. A long lever H is connected to this sliding bracket by means of a joint and is itself driven by means of a so-called pitman, this pitman being a horizontal connecting link, the other side of which hangs in another swinging arm G and its supporting bearing N.

This pitman F is provided with two cam rollers E between which a cam D rotates. The rotation of that cam D gives a reciprocating motion to this pitman which transmits it by means of lever H to the rod N, giving this rod the reciprocating motion which it must have to drive the carrier rods. This cam D is shown here. This is looking at the machine from the rear, drawing 21, while the enlargement of 22 shows the machine from the front. In the rear is the cam D which gives a reciprocating motion and the axle coming to the front of the machine is provided with a bevel gear C. That bevel gear C in turn is rotated [fol. 41] by a bevel gear pinion that is intermeshing at right angles and the pinion B is loosely mounted upon the cam shaft, which as I explained it, runs through the entire length of the machine in either direction. The ratio between the bevel gear pinion and the bevel gear C is 1 to 2, so that with a revolution of the cam shaft, this Coulier cam giving a reciprocating motion is making a half turn, which means one course in one direction. Now it becomes necessary for this entire assemblage here, carrier rods, friction rods and all parts having a reciprocating motion, to stop dead when the narrowing takes place, because the narrowing points when they come down to transfer the loops would interfere with the carriers; therefore this entire machine has to be stopped. For that purpose there is a clutch V which is rigidly fastened to the camshaft and which is nor-

mally engaged with this bevel gear pinon B. When the machine narrows, the entire camshaft shifts to the right. That is caused by another motion which we will come to later, thereby disengaging this clutch from this loosely-mounted pinion B. The clutch keeps on turning, this pinion being disengaged would make a partial turn and would come to standstill due to the friction of the machine. It must not produce a moving of the carriers because that can not be, therefore a brake is provided. When the camshaft shifts to the right it lifts the roller R, which by means of a cam P rotates with the camshaft. Lifting the arm, swings levers S and T which are made in the form of a bell crank lever so that the upper end of lever T swings to the left. In doing so, it pulls a brake band U which is laid around the periphery of this large bevel gear and brings that lever gear to an immediate stop. [fol. 42] After one revolution has been completed, the camshaft, by this other motion, shifts back to its original position, the brake releases, the pinion B is engaged again, and the Coulier motion takes up its normal function which ceased during the narrowing operation.

Now we come to the narrowing itself. This shows the function of the narrowing points which are transferring a loop from the outer edge of the fabric toward the center of the fabric. I have here also a very much enlarged narrowing point. The actual size is also on this card marked "narrowing point" right here.

The function of this narrowing point is very simple. It simply covers the beard of the needle so that the beard is embedded like this; then they go down together and enter this loop and this comes out and somewhat elevates the loop, the point carrying it over and deposits it again. When it is in that position again, the sinkers and dividers, which the these little slide pieces in the head, prevent it moving with the narrowing point, the narrowing point goes up again above the edge of the fabric leaving the loops transferred from the edge of it by two needles. The motion to do this, or rather the points, are illustrated here by Figs. 11, 12 and 13 of this enlarged drawing of the same figures in the publication Exhibits 6, 11, 12 and 13, on page 20. This shows very clearly how the needle beard is embodied in the grooves, the groove being the unshaded portion; it shows how it has lifted the loop off the needle and how it

is on its way toward the center of the fabric. Here it shows how it has deposited it on the second or next needle from [fol. 43] the edge and how the sinkers and dividers have advanced to prevent the going up of the loops with the narrowing points as they rise to normal position.

By the Court:

Q. Why, when that narrowing point goes up does the thread stick to it; why doesn't it slip off?

A. No, it doesn't.

Q. Why doesn't it?

A. On account of adhesion.

Q. Now friction?

A. No, that is all that holds it, adhesion.

The Court: All right.

The Witness (continuing): The parts which are necessary to accomplish this and give movement to the narrowing points are shown on this enlarged drawing of illustration No. 26 in the publication Exhibit 6. They consist of a number of hanging arms B as shown here and shaft E hanging in front or mounted in front of these hanging arms and called E on which the various narrowing fingers, as we call them, are mounted.

In order to show that to your Honor I will have to show you a small model which we made of a machine to illustrate this particular thing, not only this, but the attachment in suit.

I say that to these rods which run along the entire length of the machine, all of them on the swinging arms, are fastened to the so-called narrowing fingers and these are indicated there (indicating). This is an actual narrowing finger. On this model they are represented by these little [fol. 44] brass pieces. That means, just as your Honor sees it here, this corresponds to that down there; here are a number of these narrowing points because in transferring the loops, they don't actually take two loops at each time, but they take quite a number of them, usually 17 or 18 off the fabric, move up and two needles over to deposit them again. That has been done so these narrowing marks which your Honor observes don't come directly to the edge, because in former times when these stockings were sewed by hand these narrowing marks were quite a trouble for a

person sewing stockings, not to miss it with the needle, so the narrowing marks are now at a considerable distance from the edge. And that distance is equal to the number of these points.

The narrowing motion which gives the motion to these narrowing parts for the transfer of loops I want to show on this little model here. These are the hanging arms B in the drawing. This is the shaft E which runs all along the machine supported by these hanging arms. Then under shaft E are these little brass holders with the narrowing points in them and the machine, when it comes to the narrowing that is caused by the shifting of the camshaft to the right, as I mentioned before (illustrating with model), moves in this fashion and the shifting is done by the so-called chain motion which will call for explanation somewhat later.

Now you will observe the camshaft shifts to the right whereby all these rollers which are in here would be hanging free in the air unless there was some provision made to support them during the narrowing motion. Therefore all these cams are provided with extra cams on the side which [fol. 45] either support those parts of the machine that are not participating in the narrowing motion to keep them up, or change over from a round cam which is not working during the active knitting to the narrowing cam. That is a cam which performs the motions of this particular narrowing operation. Now your Honor will notice how these swinging arms come down (illustrating with model). Now, they are in the low position, which is the position when these narrowing points engage with the needles, then they lift the loops off and come up again. Now at that time a motion, which I will also explain, moves these points towards each other. This one on the upper rod and one on the lower rod, and then they deposit them again and come up again and they are free, and the camshaft shifts back again. So that shows it is very essential that any one of those cams must have a so-called narrowing cam there to transfer it from a state of immobility to a state of motion as in these cams which move back down (indicating), or those other rollers which work during the regular working of the machine where it is just the opposite. They are moved off their regular cam onto a cam which keeps them, not moving, but all of them must have a narrowing cam.

Mr. Howson: I would like to have the model to which the witness has been referring marked for identification Plaintiff's Exhibit 11.

(Marked Plaintiff's Exhibit 11 for identification.)

Now on this drawing we have that illustrated very clearly. [fol. 46] The motion to these swinging arms is given by these vertical arms C and the cam lever A to which they are connected here (indicating on drawing). Here is the cam roller. While the machine is working in regular knitting this cam roller runs on the round part of this cam which I would call the normal knitting cam.

Now if the camshaft shifts over to the right then this roller comes on this active cam and when the cam revolves then of course the roller is permitted to go down allowing these swinging arms to perform their function.

Now the up and down movement is clearly explained that way. The motion which brings the narrowing points into contact, and out of contact with the needles, is merely obtained by the arc which this swinging arm describes and which is so arranged that the location of the fulcrum gives the proper movement for the narrowing point. Sometimes it is necessary that these entire points are swung out of the way for better observation or some other reason. That is done by a hand lever which is placed in the front of the machine here and is marked F on this drawing. By a connecting rod K it is connected to two arms G and H. When it is necessary to lift the narrowing motion out of the way this hand lever is elevated thereby swinging these arms from the left to the right and bringing a roller which is fastened to the extreme end of lever H under a wedge extension of the cam, lever A thereby lifting the cam lever up and with it the entire narrowing motion.

We come now to the motion which causes the camshaft to shift to the left or right as it becomes necessary due to the narrowing motion. This device is known in the art as [fol. 47] the chain motion because it is controlled by a pattern chain which is shown here in the figure. Both the figure as well as the drawing are enlarged views of illustrations Nos. 30, 31 and 29 in the publication, Exhibit G.

This motion is located at the front of the machine and consists of a chain ratchet wheel into which a pawl marked S is operating, turning it in a step by step movement so

as to advance the chain link by link. On this chain are certain buttons which are marked R and which pass under a lever H which is located here (indicating on drawing). It is shown here on the drawing. As a button comes under an extension on this lever it lifts that lever up. It is normally down, and when the button comes under it it lifts it up thereby bringing another lever M into action to swing to the left. In doing so the lower end of this lever which has an extension swings away from a support of a swinging lever J, this lever (indicating) and that lever J is always pulled toward the center of the camshaft by a spring, but is held from going in that direction (indicating) by a flat extension, and this flat extension is arrested by this lever which I just described. Now when that lever swings to the left this lever J is released and falls inward thereby bringing this roller C into the path of a side-faced cam.

Now this lever J (indicating) is rigid. It can not move, but the camshaft (indicating) is sliding and loose in its bearings and therefore when piece D comes into the path of the roller the camshaft will be shifted to the right.

At the completion of one revolution there is a little cam piece E on the side of this cam and that swings around [fol. 48] and it presses this lever out again and the arresting lever falls into the holder again because the button in the meantime has gone from underneath the lever and now the opposite movement takes place, because the camshaft on this side has another side-faced cam which shifts the camshaft back again. In other words, this motion, whenever a narrowing button raises this part this lever J is free to fall. After one revolution, it is shifted back again to the left and held by the arresting lever until another button comes to repeat the same performance. Sometimes it is necessary to stop the chain motion altogether. That is when the narrowing is completed. In that case there is another row of buttons on the chain which comes under a little extension which is not marked here, but an extension which is protruding from the pawl. As that button comes under the pawl, the pawl is lifted out of its ratchet and merely moves without acting on the ratchet. When the knitter wants to set this motion into operation again, he has a foot pedal which is here (indicating) and which is also provided with a pawl V. He simply puts his foot on here and that brings this down and that brings this lever

in this direction and the pawl engages one of these teeth pulling the ratchet from underneath this button here, allowing the pawl to get into action again to continue the motion.

I think that explains the chain motion which shifts the cam for the narrowing operations.

We come then to the narrowing motion which is controlling the lateral movement of the carrier rods as well as the narrowing rods. These two exhibits (referring to [fol. 49] additional drawings) are enlarged copies of the cut shown by Fig. 27 on page 40 and by Fig. 28 on page 42 of the publication Exhibit 6.

These narrowing heads are located on each end of the machine. One of them is shown here in the little model Exhibit 11. A corresponding one is on the other end of the machine. This attachment consists of a base plate upon which are mounted two spindles L and K. L is the spindle which controls the movement of the carrier rod, while K is the spindle which controls the corresponding movement of the narrowing rods. Spindle L is provided with a ratchet H. Spindle K is provided with two ratchet wheels, G and I, the teeth of which are cut in the opposite directions. I must also call attention to the fact that the ratchet wheel for the carrier rods has only half as many teeth as the ratchet wheel for the narrowing rods. I will explain later why that is.

Both of them are provided with an arresting disc which is marked Y for each spindle. This disc has little cutouts, V-shaped cutouts around its periphery into which are fitted little plungers which are shown here and which are operated by a hand lever marked Z. By means of that hand lever that plunger can be lifted out of contact with these little V-shaped cutouts in the disc Y. These devices are there merely for safety. That is when these ratchets are in their correct position the wedge-shaped edge of this plunger, will enter the V-shaped cutout, and hold them there in correct position and also against accidental turning. It will take some power to overcome the resistance of that, and it is not so easily possible to turn the spindle by accident.

[fol. 50] To move these ratchet wheels H and G two pawls are provided which are marked F and E. F is here (indicating) but E is not visible on the photograph. These

pawls always work together. In fact they are connected by a steel rod, down here (indicating), so that it would be impossible to work one of them independent of the other. They must always work together.

These two pawls are fastened to a forklike lever C down here so that the up and down movement of this lever C will operate these two pawls turning both of these spindles in one direction and taking one tooth here and two teeth here. The lower end of this lever C is fastened to a cam, lever B which is provided with a roller A. Now this roller A is running normally on a round cam and when the camshaft shifts it goes onto a narrowing cam, an active cam, in a manner similar to the cam arrangement for the narrowing motion. When that happens this fork goes down and up again, and moves both spindles for the distance of one or two teeth in case of the narrowing spindles. That means that for the narrowing spindles these two nuts will move toward each other and for the carrier spindle this nut, in both of them, for the distance of two needles. These teeth are arranged in such a way that a movement of one of them corresponds to an exact movement of the carrier rods and narrowing rods to the extent of two needles, because the narrowing always takes place over a distance of two needles on account of certain peculiarities of the sinkers and dividers which really have nothing to do with this matter.

Sometimes it occurs that in the heel of the stocking, for [fol. 51] instance, the narrowing, although it is two needles, has to be moved back one needle in order to get a line of narrowing marks which is somewhat different from the ordinary line.

If I can show this to your Honor: (illustrating with Exhibit 5). Normally these narrowing marks would run parallel to the outer edge. That is there would be taken a certain number off here, but always moving it, and this would be parallel to the outer edge. But it is not so here. Your Honor will see the distance here is larger than when it is down here (indicating on exhibit). That is done in order to get the proper shape, and is done in such a way that the narrowing points take these loops and move them in two needles, and then the narrowing points move back again one needle, that means the next time they would take

one loop less and in that way the distance here would always get smaller.

Mr. Howson: Please note that the witness has been referring the Court to Exhibit 5.

The Witness (continuing): That is done by a special little regulating device which is at the extreme left hand of this drawing, Fig. 28 of the publication, Exhibit 6, which is provided with a little bar here on which are so-called regulating pieces marked 8. A lever No. 5 is provided with an extension which can run on top of these regulating pieces or on top of this bar 7. That means it can make a motion in that direction (illustrating). It is caused to do so by a spring 3 which is always tending to move a rod 1 to the [fol. 52] right, but is prevented from doing so by a collar 4 which holds the lever 5. A support, pawl D, is provided on lever C in such a way that when the collar 4 is turned over to the right, as it will do by the swinging of lever 5 it releases another collar 2 and permits the pawl D to swing inward. If that is done, the end of pawl D will engage the teeth of ratchet G on its downward movement but will only take one of these teeth instead of two, the movement being so adjusted.

In other words, when this lever goes up this pawl here will move forward in a clockwise direction two teeth, while on the way down this pawl D will turn in the opposite direction for one tooth.

It is of course understood that that thing is the only thing that it can do. It can go forward two and one back for this very purpose which I just explained to your Honor. Nothing else is intended and nothing else can be done with it and it must move while the narrowing motion takes place. It can not be moved at any other time.

This movement of the two needles is also taking place in the carrier rod because when the width of the stocking is reduced by four needles the carrier rod must follow that reduction in order to get a clean selvage which a full-fashioned stocking must have and which can not be produced in any other way, or not as perfectly produced in any other way as by the method which I have just explained.

[fol. 53] Perhaps I can show on this little model, Exhibit 11, how that is done, if your Honor will kindly come down here.

These spindles turn this way and in that way the stroke of the carrier rod is reduced. The carrier rod goes over this section like this (illustrating) and the end of its strikes this end, these little end stops. When that is moved in, naturally the stroke of this carrier rod is reduced by two needles and since we have one on each side, the total reduction is four needles, and that is why this here makes exactly the same movement, also for two needles, so that the narrowing and the carrying motion go, so to speak, hand in hand; I may say absolutely the same length as the stroke of the carrier.

This entire motion which we know as the narrowing head is, of course, a unit which is a standard part of the machine and which absolutely belongs together. You can not separate it or do anything else with it but use it for this very purpose which I have explained. Also this backward motion, which is not shown on here, but which is shown in that drawing can only take place in the one way which I have described; that is, two-one; two-one, and for the purpose—we have not shown that here but that is the way it goes; two needles forward and one back, by bringing these little points one needle out and taking so many loops less, so that the line of narrowing instead of running parallel to the fabric will run at an angle to it.

By Mr. Howson:

Q. Have you finished with the narrowing, Mr. Meyer?

A. Yes, I have finished with the narrowing.

[fol. 54] Q. When the narrowing is completed and you are through with the narrowing attachment by that time what do you do with it? How is it returned to its original position?

A. Oh, it is racked back by hand. There are cranks provided here, K and L, and the operator must rack it back to its original position by hand.

Now, then, here is an illustration which shows very clearly how the narrowing is done. This is a very enlarged loop formation of a stocking and it shows you two loops are taken up and moved over and then at that width the stocking runs a few courses again and the narrowing is repeated and so on until the width of the stocking is reduced from this width to that one (exhibiting board to the Court).

The Court: I see it.

Mr. Howson: I will offer this board that the witness has just referred to in evidence to be marked Plaintiff's Exhibit 12.

(Marked Plaintiff's Exhibit 12.)

The Witness: Now we have heard quite a bit about split knitting by which is understood the piece of fabric is interknitted of two strips of fabric of a different material or different color—anyway not the same thing. And in connecting two or three pieces of a different material in that way there are two possibilities of doing so; one is what we call the open-split or "crazy-split" or "crow-foot split,"—there are quite a number of different names for it, and another is what is known as the closed split. Now, the closed [fol. 55] split is nothing else but that the two sections of this particular material overrun each other at the joint. That is, let us say it would be black and white. The black material would run two needles into the white section and the white material would run two needles into the black section, so to speak, overlap each other and then being interknitted together. I have here a board with a loop formation which shows that. Here you see is the number of needles, in this particular case four needles. You see four needles of the white material come in here and four needles of the yellow material coming the other way and lying exactly on top of each other—all of them.

Mr. Darby: Is that what they call a "four needle lap"?

The Witness: That is correct; a four needle split.

Mr. Howson: I will offer the board just referred to by the witness in evidence as Plaintiff's Exhibit 13.

(Marked Plaintiff's Exhibit 13.)

The Witness (continuing): When the material is a little heavy and these four loops lie on top of each other, it gives rather a heavy joint or seam there and therefore sometimes an open split is made in which the loops are interknitted somewhat differently; that is, they overlap to a certain extent and then they are held in that position and when the needles are in lowest position they shift to different needles —I am speaking now of this particular arrangement—a form of floating loop on the front side of the needles. The [fol. 56] effect is practically the same, but the seam is not quite as heavy as a closed split.

Here is the same arrangement in an open split (exhibiting another board). Here are these floating loops. They are not laying on top of each other but two of them are always connected by a longer loop, so to speak, a floating loop thereby reducing this extreme thickness and having a somewhat less visible connection.

Mr. Darby: Is that what they call a "herringbone split"?

The Witness: Some call it a herringbone split.

Mr. Howson: We offer the last board referred to by the witness as Plaintiff's Exhibit 14.

(Marked Exhibit 14.)

The Witness: Formerly the open split was used quite frequently but today it is practically out of use. There are various reasons for that. One of them is, it is rather difficult to get this floating loop correct especially on a high speed machine. In manufacturing this particular split many more seconds would come. That means the stocking is not perfect and the production will have to be slowed down in order to get this particular form of split. To make such an open split, however, there is a special attachment which is known in the industry for many, many years as the "split-sole attachment." The name came from the fact that this split was used in the foot, that means the instep of the stocking, say, was made of silk and the sole, which would be the side portions, would be made of cotton, and since [fol. 57] that split the sole into sections, this attachment was used to do that work and was known as the "split sole" attachment, and is still so called today.

In this split sole attachment we have here a bracket with a lever E, this lever being fulcrumed on that bracket in such a way that the lever E which is located directly over the upper line of the carrier rods can swing up and down as this outer point of the lever is moved by this rod B. That is when that pulls down this lever will come up and when it goes up this lever will swing down. This rod B is connected to a cam lever C which is operated by a cam M as shown by this drawing. The lever E up here has a little cutout which is marked a-b on this fragmentary portion of lever A shown on the upper left of this drawing.

Now the abutment on the carrier rod which is located in such a way that it strikes against this lever A, this lever

A being located somewhere in the machine—it is immaterial where,—it strikes against that and is held there—this upper part here below that strong black line where A is marked is cut out—now the carrier abutments strike above that line against the full width of the lever A. Then when the needles are in lowest position this cam pulls the rod B down, lifts the lever and permits the abutment to slide into this cutout for the width of two needles thereby making this floating loop which I have just shown in that fabric. The cutout is shown on this little model (Plaintiff's Exhibit 11 for identification) here and I believe I can show it there. Your Honor will see this is moved against the lever there like [fol. 58] that (illustrating) and held there until the needles are in the lowest position and then this lever is moving up like that and this is sliding into that cutout moving two needles ahead. It is moving against here or the other side here (indicating) and it is held there until the needles are in their lowest position and then this lever moves up and it is sliding in and laying this floating loop.

To make it clear on the record and avoid confusion, the stops on the model that I have referred to are the stops of the attachments of the patent in suit and not the split-sole stops of the patent I am describing at the present time. I just use that as an illustration.

Mr. Darby: There is no question about their being the same, is there?

Mr. Howson: Oh, no, and I did not want him to say that they were the same as the split sole stop as are on that model.

The Witness: Sometimes it is desirable to use the same stops also for the closed split. Now in the closed split it would not be necessary to have this oscillating motion or lifting motion of the lever. In fact it should not be there. For that purpose the lever C is provided with two levers H and F on its extreme outer end, and when it is desired to have this lever at rest in order to use it for a closed split or for any other purpose, this long lever H is listed and this arc portion is laid over the shaft provided for that purpose. In that way the roller is lifted away from the cam [fol. 59] and taken out of the action of this cam. In other words, this thing will simply be at rest and can be used in that position for other purposes.

Sometimes it is also necessary to lift this lever M entirely out of the way of the abutment. For instance, when that particular rod which is now limited by this stop there is supposed to be used for the entire width of the stroke. Then the shorter lever here, F, is lifting this lever higher yet, and in other words it is lifting the lever E so high that it comes out of the way of the abutment. In that way this split sole attachment can be used for any one of those functions and has been so long as—well, as long as I know it, for about 26 years— always. It is arranged on all machines.

Mr. Howson: Please note on the record that the drawing to which the witness has been referring in his description of the split sole attachment is Fig. 35 of publication Exhibit 6.

The Witness: Now turning to the patent in suit on page 1 of the specification, line 24 I find the following:

"It is an object of my invention to provide an attachment for full-fashioned knitting machines whereby yarn guides can be accurately controlled to lay a yarn over a distance less than the full length of a course being knitted, as for reinforcing or for so-called split seam work wherein sections of fabric are connected by suture seams."

[fol. 60] The split seam work there referred to, as I understand it, is the same split seam work that I have just been describing to the Court.

I will now state what is meant by reinforcing.

Reinforcing in a general sense is the addition of a thread to the body of the fabric in order to reinforce or strengthen it. There are two kinds of reinforcing. Both are reinforcing but one is called splicing and the other is called plating. That is, in the art splicing is understood to be a reinforcing with the additional thread regardless of the relative position of those two threads. It is simply added to the fabric and it may be of the same color so as to put additional strength in that portion f the fabric; whereas in plating the bottom of the fabric, that is the fabric itself, is made by one carrier and the carrier which puts the additional thread in the portion to be reinforced is in such a juxtaposition to the other carrier that it lays the thread exactly on top of the original thread. In other words, it plates it on top somewhat like the plating of a metal surface by another metal.

In the patent, line 27, on page 2 there is a reference to reinforcing for zig-zag lines inclined to the wales and courses of the web. I will make it a matter of record as to what is a wale and what is a course. The courses of a stocking are the lines of loops which are running horizontally when the stocking is worn. That is, they run in a horizontal position from the selvage of the stocking to the other selvage, and the wales are the lines of interconnecting loops running at right angles to that, vertically. I will now explain the construction and operation of the attachment shown and described in [fol. 61] the patent in suit having particular reference to the combination of parts referred to in the claims in suit.

Mr. Darby: Might I record at this time my objection to the use of this perspective view, because it does not purport to be a copy of any drawing of the patent in suit, and we attack it on the ground that there has been added thereto something for which there is no justification either in the specifications or drawings. With that understanding I have no objection to the witness using it.

The Court: Very well.

The Witness: The Schletter attachment as is expressed in his specification was designed to control the stroke of certain carrier rods which are not running over the entire width of the fabric in cooperation with the other carrier rods which are so doing at the same time. The attachment consists of a base upon which are mounted bearings marked 12 in the patent drawing and in which bearings is located a spindle, reversely-threaded spindle 11, which is marked in purple in the perspective drawing here, and in the patent drawing itself—the enlarged copies of the patent drawing.

Mr. Howson: This perspective drawing referred to by the witness we will ask that it be marked Plaintiff's Exhibit 15 for identification.

(Marked Plaintiff's Exhibit 15 for identification.)

[fol. 62] The Witness (continuing): Two units which are colored red in all three of these exhibits and marked 9, are mounted upon this reversely-threaded spindle in such a way that the turning of the spindle in clockwise direction will move them into one direction towards each other, while turned in an opposite direction will move them away from each other.

Mr. Darby: Might I object just a moment, Mr. Meyer?

The Witness: Certainly.

Mr. Darby: To likewise record in the record at this time that this perspective drawing that the witness is referring to was not in the record in the New Jersey case. It was used in counsel for plaintiff's briefs in the Jersey case. I am afraid my previous statement might have caused some confusion. I therefore make this statement that it was created after the trial in the other case and it was not used in the other trial at all. That is correct, isn't it?

Mr. Howson: Yes.

The Witness: The outward extension of this spindle 11 is provided with two ratchets such as 21 and 22, the teeth of which are cut in an opposite direction.

It is also provided with one of those arresting discs which I have explained in connection with the narrowing machine, and it is here for exactly the same purpose, that is to prevent accidental turning and to get in the correct position.

Two pawls, 25 and 26, are arranged in such a way that one [fol. 63] of them turns the spindle 11 clockwise and the other one counter clockwise. These pawls are connected to two cam levers 29 and 29-A. These numbers on Exhibit 15 for identification correspond to the numbers on the enlarged copies of the patent in suit.

Levers 29 and 29-A carry two rollers 30 and 31 respectively. These rollers move, shifted on their stubs in a longitudinal direction, by shifting levers 40 and 41 which engage the hub of these rollers in such a way that they may shift them if they themselves are moving in either direction. These rollers are normally working on round cams the same as all the other motions of the machine and they bring these two levers and pawls into action when they are shifted on an active cam which is marked 35-A. That is done by a shifting rod 42 which is mounted in front of the machine. This shifting rod is normally pulling at any time towards the left by means of a spring which is provided for that purpose and is marked 43. That spring always pulls that shifting rod in that direction. The shifting rod cannot go in that direction because it is prevented from doing it by an arresting lever 59 which is shown here, and which is between one of the supporting bearings of rod 42 and the collar fastened on that. In trying to go in this direction, the rod comes with

its collar against this arresting lever and is prevented from doing so. The upper end of this arresting lever is fastened to a lever 56 which is mounted on a front bearing of the machine in such a way that an extension of the lower side of this lever 56 is directly over chain 50 to which is given a step by step movement by any well known pawling ar- [fol. 64] rangement which is not shown. On that chain 50 are buttons 55. As soon as one of these buttons comes under the extension of the lower side of lever 56, it lifts this lever 56 and with it the arresting block 59, thereby permitting this collar to follow the pull or spring 43 and go to the left, and with it of course the entire shifting rod. When that shifting rod goes to the left, it takes with it these two rollers —these rollers 31 and 30 are shifted from their inactive cam 35 to the active cam 35-A. When that takes place these two levers 29 and 29-A are given an oscillating movement, which in turn operates the pawls 25 and 26 for the motion of these ratchets. After one revolution is completed, the shifting rod 42 is pressed to the right again by a bell crank lever, which is intended to shift rod 44 at the extreme right side of Exhibit 15 for identification.

By the Court:

Q. Is that the right side?

A. Right here, the right side of the exhibit.

Q. Oh, I see what you mean.

A. (Continuing.) This bell crank lever is given an oscillating motion by a cam 45, and a cam lever having a roller working on this cam 45. The oscillating motion given to that lever gives a swinging motion to the vertical end of bell crank lever 44. This swinging motion forces rod 43 back to the right and since the button has been removed from the extension of lever 56, this arresting lever can fall in again and hold the shifting rod in its original inactive position. By "inactive position" I mean it leaves the rollers back to the inactive cam, and the pawling motion ceases. So [fol. 65] it is quite obvious that the arrangements of these buttons 55 in that chain constitute what Mr. Howson in his opening called a timing movement. That is, any time when one of those buttons lifts this arresting lever a pawling motion would take place. In order to select the way it is to operate, that is either to the right or to the left, another chain is provided in the rear of the machine. This chain is

called 70 and the buttons on that chain 72. There is also a pawl 71 which gives a pawling motion to this ratchet and its chain. These buttons pass underneath the extension of a lever 73 and lift that lever around its fulcrum whenever a button comes under it. The outer end of that lever 73 is provided with wires 74 and 75 in such a way that while a button is underneath, one of the pawls is lifted out and the other one is permitted to fall in, and when the button passes from underneath the lever, the reverse takes place, that is, the pawl which was in, is drawn out. Or what was out is permitted to fall in. It is therefore also clear that these buttons marked 70 are what are called the selecting mechanism, that is, they determine the direction in which the spindle 11 is to be turned at the time, determined by timing mechanism in this chain here. Now the nuts 9 which are mounted on spindle 11, have special stops which are called 7, and which in all respects correspond to the stops described. They have a cut-out and can be operated by cam levers 15 and connect the rods 16. There is only one difference here, that the outer end of these levers marked 18 is provided with a rod which runs about the width of a section and which is marked 17 in Figs. 1 and 2 of the enlarged patent draw- [fol. 66] ings, that makes it possible with this operation of swinging the special stop lever up and down to make this split and which can be kept up while they are moving inward or outward, that is the outer holes are both wide enough that they slide on rod 17 so that they will operate, no matter in what relative position they are. In that way Schletter is able to make almost any design which may come along in the knitting industry.

Another thing which he had to provide for is the fact that this attachment and the narrowing motion may not work together because if it does, it will cause a smashing of the machine. It would be impossible to work them at the same time. That is, while the narrowing machine works, this attachment will not work. Since the human element is involved there, that a mistake may be made, he had to provide a safety device to prevent that. This safety device is shown in Figs. 11 and 12 of the patent drawing Sheet 2. This device is made in connection with what I described as the chain motion. Here this lever marked 99 is the lever which falls in, your Honor remembers, between the two shifting cams which causes the shifting cam to shift, which

moves this motion to the left—towards the cam shaft. When that swings to the left, the other end of it naturally swings to the right and to this other end he has attached a rod 94 which will push in that direction and come into the path of an extended lever 96. This lever is mounted on this shifting rod 42. That means this one here (indicating). Now when the arm 99 falls inwards down here, this other little arm which is marked 94 comes out and arrests this shifting rod so that even though a mistake should have been made [fol. 67] and this is lifted, it cannot be shifted while the narrowing machine is operating.

When I say that the attachment is not to be permitted to work while the narrowing machine was operative, that does not mean that the design cannot be placed in the part of the stockings which is being narrowed. I have explained that between the narrowings there is a certain space of plain knitting which varies, of course, according to the design, which might simply be so arranged that the working of this attachment takes place throughout in these plain courses, not where the narrowing takes place.

I will briefly state what part of the attachment is shown on this aluminum model, Exhibit 11 for identification.

This model shows on the reversely-threaded spindle two nuts with their special oscillating stops No. 7. It shows the cam means through which this oscillating stop obtains its motion according to the provisions of the letters patent; it shows the two ratchets—the right and left hand ratchets and it shows the connection to their cam levers, it shows the cam rollers which are shifted in order to put them into connection; it shows the cam shift and reverse; it shows the rod 42 to which they are mounted. It also shows here the arresting lever which prevents shifting of that rod and the chain motion which brings them into operation to put the pawling motion in and out of operation. It also shows the lever which is being the connecting link to the pawl 71 in the rear of the machine, and operates this ratchet which takes care of these two pawls by means of these chains—they are, of course, substituted here by little pins, and which exchange these pawls whenever it is desired.

[fol. 68] If you will wait, I can demonstrate that very clearly. Now there is one of these pawls coming here. If your Honor will watch, you will see how they shift to the active cam. This will be lifted by this motion and permits

that rod to shift. In its shifting, it brings these rollers from the inactive cam to the active cam, thereby operating the pawling motion there. Now this particular pawl is operating. That has just changed now. That pawl was operating and that has been done by this lever back here. There are buttons which are represented by this round part up here. Now this pawl operates and turns the spindle in the opposite direction. Now the next time we will change again, I think. No, not that time. Now they changed. Did you see, they changed from the right to the left again.

Referring to the drawing which has been marked Exhibit 15 for identification, I will state that in my opinion that drawing fairly illustrates the construction as shown and described in the patent in suit.

I will now refer to some of the different types of work that can be done on this attachment and will explain the manner in which the attachment operates in doing these different kinds of work. First, I will refer to the illustration in Fig. 10 of the patent in suit.

The stocking as illustrated in Fig. 10 of the patent drawings and shown somewhat enlarged on this exhibit——

Mr. Howson: I will offer the drawing to which the witness has just referred as Plaintiff's Exhibit 16.

(Marked Plaintiff's Exhibit 16.)

[fol. 69] The Witness (continuing): In this Exhibit 16, showing the same stocking of which I have an actual sample here.

Mr. Howson: I will offer that sample as Plaintiff's Exhibit 17.

Mr. Darby: That is not the same, is it?

Mr. Howson: Why don't you cross-examine him about it. It is supposed to be the same.

Mr. Darby: You are not advancing this as the same as this; it is not the same.

The Witness: When I said it was the same, I meant as far as the purpose of this attachment is concerned. The lower end of it, instead of ending here, runs straight down to the sole or instep, but the part with which we are really concerned, is the same. That is the zigzag line here. The carrier rods which are needed to do this are very clearly shown by the diagram right on top of the stocking blank.

In this diagram the red represents the stop 7, and the green in the center which is running from the inside to the outside of these stops is making the inside design, just as these stops come here and go together, it makes them in accordance with the provision of the stops. The red stops which are marked 2, the carrying rods being marked 1, 2 and 3, work between the left yellow stop, while the right abutment also marked green on carrier No. 3 is exactly the same thing, between the right hand stop and the right outside stop of Schletter. In other words, this motion is made by [fol. 70] this stop as well as that (indicating). If this stop goes two needles, this will go two needles shorter and this two needles longer. In other words, they will keep in contact with each other to keep the line of overlapping here in exactly the right position.

Q. Now, Mr. Meyer, I want to get what Mr. Darby said straightened out in the record at this point. As I understand it, the drawing, Exhibit 16, is what is intended to illustrate just exactly how a stocking substantially identical with that shown in Fig. 10 would be made?

A. That is correct.

Q. In this stocking which I think has been offered in evidence, state briefly how this stocking compares in design and in the way in which it would be made to that which is illustrated in Plaintiff's Exhibit 16.

A. This stocking is exactly the same as the design in the patent drawing, with the one exception that instead of closing the design here shortly before the instep, it shows from this point on.

Q. In other words, the design in the drawing would stop about here (indicating) in the stocking.

A. It simply would leave here (indicating), but in this one it goes straight down.

Mr. Howson: I offer in evidence the stocking which has just been referred to by the witness and ask that it be marked Plaintiff's Exhibit 17.

(Marked Plaintiff's Exhibit 17.)

Q. Can you produce, Mr. Meyer, another example or illustration of insert work which can be made by use of the at- [fol. 71] tachment?

A. Yes, I have another drawing here.

Mr. Howson: I will offer in evidence the drawing that the witness is about to refer to, as Plaintiff's Exhibit 18.

(Marked Plaintiff's Exhibit 18.)

The Witness: This drawing, Exhibit 18, also shows an insert into the center of the stocking. By an insert we mean that this is of a different material and is not put on top of this body of the stocking, but is inserted into it. It is made of a different material from the stocking itself and it is connected to it by an overlapping line which can either be a closed or open slit as explained before.

I have here a part of a stocking blank which shows such an insert of a different material, which has, however, not exactly the same shape as that, but that is immaterial. The material is not the same as the stocking itself. The operation of the carrier rods is practically exactly the same as in the Schletter stocking here being the same thing, only being shown that also a small design can be made in this way.

Here is the extra carrier rod No. 4 shown—the body of the stocking up to this point here where the carrier rod No. 1 takes the center of the design, the left, and carrier No. 3 the right side of the stocking as in the Schletter's stocking. It is also perhaps to be noticed that this design is made exactly where the narrowing of the stocking takes place; that is where Schletter's safety device comes into operation to prevent the narrowing and the shifting meeting at exactly the same course. They must not come together.

[fol. 72] Q. This piece of fabric which you have used in your last answer, is that illustrative of the type of insert work that you are referring to?

A. This is of the same type although not of the same shape as shown here.

Mr. Howson: We offer in evidence for the purpose of illustration the insert work testified to by the witness and ask that it be marked 19.

(Marked Plaintiff's Exhibit 19.)

The Witness: The specification at page 2, line 20, specifies that the

"• • • mechanism is capable of co-acting with respect to the web-forming needles to provide clocks or other orna-

mental reinforcements which may be ornamental or useful or both."

It goes on to say that:

"• • • other than that shown in Fig. 10, is disclosed in letters patent granted me (Schletter) under date of March 31, 1935, and numbered 1,531,349, wherein the clocks are made by a splicing yarn instead of by split-seam work."

I will explain what that splicing work is.

Mr. Howson: This drawing that the witness is about to refer to I ask be marked Plaintiff's Exhibit 20.

(Marked Plaintiff's Exhibit 20.)

[fol. 73] The Witness: This stocking, or this drawing, rather, Exhibit 20, shows an example of work known as shadow clock. The name comes from the fact that a thread —an additional thread is laid on the body of this fabric of the stocking. This time it is not a connection but this thread is simply laid on top of it and when worn on the human leg it has the effect of a shadow and hence its name "shadow clocks." We have a stocking here which shows that very plainly.

The Court: I know what you mean.

The Witness (continuing): Now to make this as shown here by Exhibit No. 20, the carrier rod No. 5 in this case is running across the full width of the stocking until we come to a point of these clocks. At that point carrier rods 3 and 4 are put into action, one of them making the right and one making the left clock, the motion being, of course, exactly the same for both. That continues until you come to the heel reinforcement which is marked here. That heel reinforcement is made by carrier rods 1 and 2 working between the stops which have then come to a complete standstill. That is, the design is all straight, so this reinforcement, that is, the reinforcement of this heel, in that way these designs can be made by the employment of five carrier rods at the same time. In this case the auxiliary stops of the attachment control between them carriers 3 and 4 and co-operate with the end stops in covering 1 and 2.

By Mr. Howson:

Q. You showed the Court a specimen stocking to illustrate [fol. 74] that shadow work of Schletter's earlier patent. I offer that in evidence.

A. I would like to refer you to that, Mr. Howson, that this one comes directly out of the reinforced heel, that being the object of Schletter's patent. There are other reinforcements which do not do that, which are entirely free from the heel reinforcement.

Mr. Howson: I offer that specimen in evidence as Plaintiff's Exhibit No. 21.

(Marked Plaintiff's Exhibit 21.)

Q. I would like you to get another example of clock work such as can be produced by the attachment of the patent in suit, Mr. Meyer.

A. Here is a sample of clockwork like that which is independent of the heel reinforcement, right on the body of the stocking itself. The carrier motion is practically the same as the one described.

Mr. Howson: We offer this stocking last produced by the witness as Plaintiff's Exhibit No. 22.

(Marked Plaintiff's Exhibit 22.)

Q. That is as to illustrated shadow clocks. Is there any other type of clockwork that can be made by the use of the attachment of the patent in suit?

A. Oh, yes, there are various types. One of them is known as the so-called window clocks.

Q. Give us a specimen of that and explain what type of work it is and how the attachment is utilized in forming it?

A. A window clock is exactly the opposite of a shadow clock. That is to say, in a window clock the body of the stocking is reinforced, made of two threads, while the clock itself is only made of one thread, thus becoming less [fol. 75] transparent than the body of the stocking, to appear like a window.

The window clocks are made as illustrated by this exhibit, but the carrier No. 4 is making the body of the stocking down to where the window clocks begin. At that point an additional thread is knitted into the stocking by carrier

rod No. 3, which is making the part between the open clocks from here to here and in the center while carrier No. 2 is making the reinforced part from the left outer selvage to the left outer edge of the window clock; the carrier No. 1 is from the right outer selvage to the left outer selvage of the window clock design.

Mr. Howson: We offer the stocking as Plaintiff's Exhibit No. 23.

(Marked Plaintiff's Exhibit 23.)

And the drawing as Plaintiff's Exhibit No. 24.

(Marked Plaintiff's Exhibit 24.)

Q. In referring to the reinforcement work done by the attachment in the patent, at line 25, page 2, there is reference to clocks and other ornamental reinforcements, can you illustrate any form of ornamental reinforcement other than that you have already described?

A. Yes, there is what is called selvage reinforcements which are, of course, run from the selvage of the stocking instead of the center of the fabric. The selvage reinforcements are of course, forming the heel when the stocking is sewed together afterwards and their ornamental effect is in the upper extension of the heel or reinforcement, and they are made in the same way as the others, carrier [fol. 76] rod No. 3 making the body of the stocking all the way through to here, and carrier rod No. 2 laying the additional thread for the reinforced selvage—fancy reinforced selvage on top of the body, on the left side of the stocking, while carrier No. 1 is doing the same thing on the right side between the under studs and the left studs shown in Schletter's patent.

Here is a sample of one of the reinforced selvage stockings.

Mr. Howson: We offer the stocking and the drawing last referred to by the witness, and ask that they be marked respectively Plaintiff's Exhibits 25 and 26.

(Marked, the drawing Plaintiff's Exhibit 25 and the stocking Plaintiff's Exhibit 26.)

Q. Mr. Meyer, I hand you another stocking. You might state briefly what type of stocking that is.

A. That is also a fancy reinforcement—selvage reinforcement of the same nature as the one just described, only where this one is laid on top of the body of the stocking, this one is shown here to have the reinforced selvage attachment made of different material and is joined to the body of the stocking by the overlapping of the needles.

Mr. Howson: We offer this as Plaintiff's Exhibit No. 27.

(Marked Plaintiff's Exhibit 27.)

Q. Now Mr. Meyer, the stockings to which you have thus far been referring are stockings which involve design work made on the legger. Is the attachment also applicable to work on the footer?

[fol. 77] A. It is. I can produce a specimen of work which is performed by use of the attachment to the footer. This stocking here is provided with a foot reinforcement which is known as the "cradle foot." The cradle foot is a reinforcement in which the end reinforcement follows the outline of the shoe, and which is extremely popular just now. In fact, it is almost exclusively sold and there is hardly any other stocking today. This cradle foot makes it necessary that the enforcement comes in one direction here and goes backward and reverses its direction again to come out again.

It is perhaps better shown here on this exhibit which shows clearly how the reinforcement here is wider, gets narrower, here gets straight and here becomes wider again. In other words, the carrier rod stops itself, going in one direction, going straight and coming to the opposite direction to obtain this curve, which this stocking very clearly shows.

The different carriers are controlled by the stops in doing that in the same way as before. The carrier rod No. 3 goes the full width of the foot, changing its stroke only to define the narrowing, or at least created by narrowing, while carrier rod No. 1 makes the left reinforcement and carrier rod No. 2 makes a right reinforcement to create the shape of the cradle foot as it is shown here.

Mr. Howson: We offer the drawing as Plaintiff's Exhibit No. 28 and the stocking as Plaintiff's Exhibit No. 29.

(Marked Plaintiff's Exhibit 28 and 29 respectively.)

[fol. 78] Q. I hand you another stocking and stocking blank. Will you state what, if anything, that illustrates

in connection with the work on the attachment on the footer?

A. That is also a cradle foot reinforcement but made in the form of what you call split foot. That is the center part or instep part, is made of silk in this particular case, while the sole is made of cotton and it is connected in there under a long suture, seamed here along the line of the cradle foot, showing that curve which is characteristic of the cradle foot, but it is a different material also. The carrier rods work, of course, exactly the same way, except they make the section of cotton overlap here along the line.

Mr. Howson: We offer the specimen last referred to by the witness as Plaintiff's Exhibit 30.

(Marked Plaintiff's Exhibit 30.)

Q. And do you recognize this stocking as also a form of the cradle foot with special fancy design?

A. That is a cradle foot with an additional fancy design along the otherwise straight line.

Mr. Howson: I offer this as Plaintiff's Exhibit 31.

(Marked Plaintiff's Exhibit 31.)

Q. Now, Mr. Meyer, state whether or not the plaintiff, Textile Machine Works, has put this Schletter attachment into actual use?

A. Oh, yes. I produce an illustration of the attachment as manufactured and sold by the plaintiff. This is a copy of the Reading Record, a paper which is is- [fol. 79] sued by the Textile Machine Works monthly, and on pages 2 and 3 of that record there are illustrations of the attachment in the form in which it has been put out by the Textile Machine Works. I will explain the construction and operation of the attachment as put out by the plaintiff. (Witness produces drawing.)

Mr. Howson: I offer in evidence the copy of the "Reading Record" of 1930 as identified by the witness as Plaintiff's Exhibit 32.

(Marked Plaintiff's Exhibit 32.)

The Witness: This drawing shows the commercial form in which the Textile Machine Works brought this attachment into the market. It consists also of the reversely-

threaded spindle 11—on which two nuts 9 are mounted in such a way that a clockwise or counter-clockwise turning of spindle 11 would move them away from each other or towards each other. These nuts are also provided with extensions 8 containing special stops numbered 7, these stops being arranged in the form of individual slides for each carrier rod for the sake of convenience the effect being exactly the same as a sliding stop would be because they are rigidly mounted with the exception that they can be slid up and down in the extensions 8.

The outer end of spindle 11 is also provided with two ratchet wheels 21 and 22, the teeth of which are cut one here and one here (indicating) in opposite directions. There is also the arresting disc which is shown in Schletter's patent and the corresponding plunger and hand [fol. 80] lever by which this arresting disc can be released. Then there are two pawls, 25 and 26, one of them working in the right hand ratchet wheel and the other working in the left hand ratchet wheel and these pawls receive their pawling motion by a connecting rod from a lever which is marked 29-29a, the markings of these parts being the same as in this Schletter patent but only where in the Schletter patent are two levers this has been, for commercial reasons, simplified into one, but it is exactly the same thing. It is the same lever with a roller on it which can be brought into or out of operation whenever it is desired to give a pawling motion to the two pawls 25 or 26. That is done by a chain which is provided with a number of buttons, 72. These buttons work against the outer end or lower end of a vertical lever, the upper end of which is resting under the cam lever 29-29a and the roller 30-31. That means that ordinarily this cam lever, this supporting lever or retaining lever will prevent this roller from working on its cam because the cam is round. When one of the buttons comes in contact it will swing the lever out of the way and permit a pawling motion to the two pawls to turn the spindle in either the right or left direction.

The selection of those pawls, that is, whether they have to operate one way or the other, is made by the selecting mechanism which consists of a lever 74-75, a connecting rod 73, and another lever extending to the front of the machine. Normally when the retaining lever is swung out of the way

it just touches this selecting lever and the right hand pawl remains in operation. It will be noticed that here the [fol. 81] buttons, some are lower and some are higher and when a higher button comes under this the lever is swung over an additional amount, pulling this lever over and thereby by this connection of levers exchanging the pawls from one to the other.

Now there is only one chain and one row of buttons being used in this attachment. The only difference is that those buttons are lower and these buttons are higher (indicating) being the exact equivalent of two rows of buttons, or for that matter two chains; merely to make the attachment commercially cheaper, of course, that has been adopted.

This is not the very first form of the attachment as Plaintiff put it out. As first put out it had that sliding stop just as shown in the patent in suit. Since then these slides have been added to the stop so as to make it more convenient to select the carrier rods. Apart from that the only difference between the plaintiff's attachment as made commercially and that as shown in the patent in suit is that instead of the two independent or different chains to operate the time and selecting mechanisms separately, they operate them still independently but by a single chain with two sets of buttons because it is cheaper.

I have examined the photograph of the defendant's attachment as illustrated in Plaintiff's Exhibit 2, as well as the machine from which they were taken.

Mr. Howson: I offer in evidence the perspective drawing used by the witness in describing the commercial form of [fol. 82] plaintiff's attachment as Plaintiff's Exhibit 33.

(Marked Plaintiff's Exhibit 33.)

I will describe the construction and operation of the defendant's attachment as illustrated in the stipulated pictures, Plaintiff's Exhibit 2. The defendant's attachment as illustrated here by this drawing, Exhibit No. ——

Mr. Howson: I have not offered it yet. We will offer it as Exhibit 34.

(Marked Exhibit 34.)

A. (Continuing.) —as Exhibit 34 we have again reversely-threaded spindle 11 to describe it properly the same as for all the former attachments described; we have also

the nuts 9 with their extension 8 and their stop 7. Defendant's attachment uses the same arrangement as the plaintiff in the commercial form of its attachment, only instead of having these slides permanently located, to be moved up and down away from the carrier rods or in the path of their carrier rod abutments, they take these stops 7 out and have provided a number of holes which are distributed over the width of the carrier rod and wherever they want to stop a carrier rod they put this stop into that hole, being in effect the same as the slides there. The outer end of the spindle is also connected with two ratchets giving the right and left direction and it also has the arresting disc with the corresponding plunger to enter the V-shaped disc of the periphery. The pawling motion is controlled from a chain in the front of the machine with a row of buttons. This particular row of buttons is the one which is [fol. 83] marked 55. Nos. 50-70 are the chain. The buttons 55 come under one of these levers and push the rod 42 corresponding to the shaft rod in the Schletter patent with a shifting lever here pushing the roller 30-31 over from an inactive position to an active position, thereby oscillating the cam lever 29-29a, which is connected to the vertical connection by a rod 27-28 giving the pawling motion to the lever to which those two pawls are fastened.

Now to select which one of those two pawls is to operate there is a second row of buttons. These buttons are marked 72 on the chain and they are lifting the bell-crank lever similar to the one for the operating of the pawling mechanism or timing mechanism and pushing to the right and shifting rod 74. At some place along this shifting rod a wedge-like piece of metal is fastened.

The Court: Let me ask a question: I understood counsel for defense to say, when he was asked as to his defenses what he had to say about infringement, to say that the two devices, the plaintiff's device and the defendant's device were similar but that neither one of them was similar to the patent in suit. My understanding of that statement is it would mean that he did not question the similarity in construction of those two devices. You are merely contending that neither the plaintiff nor the defendant followed the teachings of this specific patent. It might shorten your examination on this defendant's device.

[fol. 84] Mr. Howson: I think the witness is almost through. Of course, it is important that our record make it clear what the actual defendant's construction is.

The Court: You have that drawing.

The Witness (continuing): This ratchet which is shown and marked as 75 here in the drawing pushes a connecting rod which is going to the rear of the machine and moves a bell-crank lever 78. This bell-crank lever is connected to the pawls again by a rod 79 and in this way the pawl which is to operate is selected.

By Mr. Howson:

Q. And in this case as I understand it, the difference between the defendant's device and that of the patent in suit is the operation simply has to do with the placing on a single chain the two sets of buttons to operate independently time and selecting mechanisms, whereas in the patent in suit there is one in front and one in back?

A. That is correct.

Q. Now, what type of machine is it that is used by the defendant—knitting machine?

A. That is the Lieberknecht machine. That means that it is a machine manufactured by Karl Lieberknecht in Germany and imported here by the defendant to the Hirsch Knitting Machine Company. It is the Cotton type of machine—the ordinary Cotton type of full-fashioned knitting machine.

Q. In the mode of operation in the way of performing the work made by the attachment, will you state what, if any, [fol. 85] difference there is between the device of the plaintiff's patent in suit as you have explained it and the defendant's attachment as you have explained it?

A. There is no difference; they are substantially alike. The same kind of work performed in the same way.

I was a witness in the Hofmann suit, and I am familiar with the defendant's attachment in that suit. I am shown a drawing of that attachment as contained on page 65 of Volume II of the record in the previous suit. I will say that defendant's device in this case and that device are substantially the sa[illegible]

Mr. Darby: I did not know that we are here before the Court defending a charge of infringement by the Hofmann Machine. I do not see that that is relevant or material.

The Court: No, I suppose counsel's idea is that if an opinion is to mean anything to me I should know what is in the record before that Court.

Mr. Darby: Yes. And the record is before your Honor for that very purpose. I do not know how far he wants to go into the evidence. I have not any objection if your Honor thinks it will be helpful.

Mr. Howson: I am afraid that I will have to go a little further as to the importance of this. I agree it is not res adjudicata, but the force and effect of an opinion in another court, in so far as it involves the same state of facts has certain importance on principles of comity and for reasons [fol. 86] which, of course, your Honor understands.

The Court: Of course it all goes back in the end to what I think about it myself. I have to stand on my own feet when the time comes. But of course you are going to argue and you will insist that one district court and one court of appeals have held this patent to be valid and to be infringed by a certain device which device is the equivalent of the device now complained of.

Mr. Howson: Exactly.

The Court: Therefore you want me to know what was before that Court and you have a right to do that. I don't think counsel have any serious objection?

Mr. Darby: Not at all. I thought he would accomplish that by putting the record in.

The Court: I supposed so, but I suppose he wants this witness to point out what, if any, differences there are between them.

The Witness: It is exactly the same. We have the reversely-threaded spindle, the nuts with the carrying rod stops; we have the two ratchets with the teeth cut in the opposite direction; the arresting disc; we have the pawling mechanism which is shown by this rod here pushing over—this motion here giving the motion to the pawls and operated by a line of buttons on the chain and we have the selecting mechanism operating by a second line of chains and the operating and second shifting rod which selects by a combination of levers the pawl which is to operate.

[fol. 87] I have caused a set of photographs of the defendant's device included in Exhibit 2 to be marked with identifying numbers corresponding to the numbers which are

used on Plaintiff's Exhibit 33 for the convenience of the Court if it wishes to make the comparison.

Mr. Howson: I offer this set of photographs in evidence as Plaintiff's Exhibit 35.

Mr. Darby: Can we not consent to a substitution of these for the others?

Mr. Howson: All right. That will make me very happy.

The Court: Substituted for those mentioned in the stipulation?

Mr. Howson: Yes.

I offer in evidence the drawing to which the witness referred as illustrative of the defendant's attachment in the Hofmann case as Plaintiff's Exhibit 35.

(Marked Plaintiff's Exhibit 35.)

The Witness: I will state to what extent the plaintiff has made use of the attachment as I have described the attachment, in commercial form. The plaintiff has sold a great many of these attachments aside from the attachments which were put on the machines. That means independently from the machines. As far as the machines are concerned plaintiff is still selling machines with the attachment. As to how long that has been, I will say that that is many years ago. I could not state. It depends exactly when we had that standard on machines.

Referring to Plaintiff's Exhibit 3 it appears that the stop used in the commercial form of attachment as shown [fol. 88] in this drawing are not the undercut stops or split-sole stops of the type I have described. It is a fact that in the commercial form attachment we have used the sliding stop and not the undercut stop. So far as the making of split seams is concerned, we make the split seams on the commercial form of attachment in the form of a closed split with the solid stops which is one of the forms of split-seam which can be made by the precise form of the plaintiff's attachment as described in his patent.

Mr. Howson: Now, if the Court please, in the absence of the omission of something which I wanted to put in, and neglected to do, that ends the direct examination of the witness.

Trial Resumed

Mr. Howson: If the Court please, I would like to interrupt the deposition of Mr. Meyer for the purpose of putting on one or two fact witnesses. Mr. Darby has kindly consented to that.

The Court: Very well.

Hugo Hemmerich, called as a witness on behalf of the plaintiff, being first duly sworn, testified as follows:

Direct examination.

By Mr. Howson:

The Witness: I am 47 years old; I live at 1248 Penn Avenue, Wyomissing, Pennsylvania. I am superintendent of [fol. 89] the Berkshire Knitting Mills, Reading, Pennsylvania. The Berkshire Knitting Mills are manufacturers of full-fashioned silk stockings for ladies. I have been connected with that company for over 26 years.

As to what, if any, connection there is between the Berkshire Knitting Mills and the Textile Machine Works in Reading, I will say that they are separate organizations; managed entirely separate, but the owners, Messrs. Thun and Henry Janssen are the main stockholders in the Berkshire Knitting Mills and owners of the Textile. But the business is operated entirely separate. I have no connection whatever with the Textile Machine Works.

As to what make of knitting machines are used by Berkshire, I will say that we are using full-fashioned hosiery machines manufactured by the Textile Machine Works. At present we have 1180 machines. As to what the daily capacity of those machines is, I will say that we are manufacturing normally about 12,000 dozen per day. As far as I know it is the largest mill in existence for ladies' full-fashioned silk hosiery. The product of the Berkshire Knitting Mills is high-grade silk hosiery only.

I am familiar with the reinforced selvage or shadow clock attachment as put out by the Textile Machine Works. We use it in our mill. I am shown Plaintiff's Exhibit 32 and asked to look at page 3 of the exhibit and state whether or not I recognize that as the attachment. I will say that I do. That is the reinforced selvage. In this picture I

note that the attachment is provided with a series of slides. Our attachments are provided with slides. When we first [fol. 90] procured such attachments from Textile they had straight blocks—the first attachments we received.

As to how many of those attachments we have in operation, I will say that—the reinforced selvage attachments, as such, we have 1023 and the remaining 157 machines have not got it. We procured the first of such attachments about 1927. We equipped our machines gradually with the attachments, and, of course the new machines always had them on. I am asked to state for what purpose we have used the attachments. I will state that we have made pointex heel, double pointex heel and various kinds of fancy goods and selvage reinforcements, French heels, cradle-foot and split-seam work at an angle of the wales and courses of the stocking. As to whether the machines with these attachments have been largely used, I will say that we are using them all the time. We have found the attachments highly satisfactory for those purposes.

Q. Mr. Hemmerich, you have had experience with full-fashioned knitting machinery for at least 26 years you have testified and had experience in the largest full-fashioned hosiery mill. I wish you would state what your attitude towards that attachment is; that is, how you regard it. Is it one of value to the full-fashioned machine or of importance or how would you consider it?

A. Well, I would consider it all-important. I think no manufacturer would want to buy a knitting machine, full-fashioned knitting machine, without that attachment.

Q. Since you have had the attachment has it changed in any way the manner in which you have manufactured your [fol. 91] stockings or the designs or things of that kind?

A. Well, I would like to mention above all the development of the cradle-foot, which, since the development of the attachment, has become in universal demand.

As to whether or not I regard an attachment having the capacity for doing these various designed works for which I have used it is or is not of importance to the full-fashioned knitting machinery, I will say that it is all-important.

Mr. Howson: You may examine.

Cross-examination.

By Mr. Darby:

The Witness: I am familiar with the attachment that we acquired from the Textile Machine Works. I am familiar with the reversely-threaded spindle. We acquired these reversely-threaded spindle attachments from the Textile Machine Works, at the end of 1927. At that time we got the first ones. We were making the so-called pointed heels before that time. We made them on an attachment that we also bought from the Textile Machine Works. That was not an attachment with a reversely-threaded spindle. The first reversely-threaded spindle that we had as an attachment to the machine is the attachment we acquired and I testified about acquiring from the Textile Machine Works beginning at the end of 1927. In these attachments that we acquired from the Textile Machine Works, they were solid stops to my recollection in the first ones. They were not undercut. They were tilting stops. They could be thrown out of operation entirely, and the spindle was pattern-chain controlled. At that time we had one chain.

[fol. 92] Q. And that one chain controlled not only the amount of rotation of the spindle but it also controlled in which direction the spindle would rotate, is that right?

A. Are you referring to the reversely-threaded spindle now or to the straight one?

Q. The reversely-threaded spindle of the attachment.

A. Well, the ones that we are using, they have different kinds of buttons on the chain and on account of the height of the button the controller lever action which throws out a pin controls the ratchet for forward or backward motion.

Q. And in that respect the machines that you are using now are the same as the first ones that you got from Textile Machine Works?

A. Well, they were changed from time to time. But we are still using one chain for going backward or forward on the spindle. To my recollection we have always used that one chain since the first attachment we got from the Textile.

As to whether we ever made shadow clocks with that attachment for the commercial market, I will say that we only made samples, but we never made them commercially. We never made any split clocks commercially with that

attachment either. The reason was that we simply did not want to go into that type of business. Our practice had been to make mostly plain merchandise.

Q. You refer to at the present time, I presume. You are making the pointed heel stockings?

A. We are making the so-called French heels, the so-called curved heels that curves into the sole.

As to whether we use automatic operation of the spindle in the stockings we are manufacturing now in both direc-
[fol. 93] tions; that is, automatic in both directions for the leg part of the stocking, I will say that for the leg part of the stocking we only use one direction. That is, for the leg part of the stocking we just automatically move the spindle in one direction. When the stocking is completed, we get the stops back by racking it out by hand. So far as our commercial stockings today are concerned, in so far as the leg portion is concerned, we only need automatic rotation of the spindle in one direction for the leg part, but the machines are equipped with the reversely-threaded spindle. If we want to and we made stockings like that some years ago. That was shortly after we first got the attachment. That was the double pointed heel type of stocking; a so-called Diablo heel. That is a heel effect that starts with the wide part, you know, the regular width of the splicing and then comes in on an angle towards the selvage and then comes out again. This "Diablo" is a game that is played in Japan and still is played in Japan. I refer to this type, Plaintiff's Exhibit 27. That is what we call "Diablo." That style of stocking is no longer popular. We do not make it any more. We do not even make a so-called pointed heel today any more. Today it is practically all French heels; narrow at the top and curving in toward the sole and with the full cradle-foot.

In making the cradle-foot on the footer we use two racks automatically for power. So far as the leg of the stocking is concerned we only use one way racking by power. We used one way racking by power, in making the pointed heels before we acquired the attachment from the Textile Ma-
[fol. 94] chine Works. That was not a drum attachment. That was also an attachment of similar construction. That was not the reversely-threaded spindle. The reversely-threaded spindle subsequently came out, afterwards. It was only racked in one direction. It was a spindle.

Q. It had reverse threads on it, didn't it?

A. Yes. I mean the spindle was reversely threaded with two stops on, yes.

Q. That is what I want to get at. So that the equipment which you used which was likewise the attachment in producing pointed heels before you got the attachment which we are here referring to as the Schletter attachment consisted of a shaft of metal with threads reversed as to each other on the opposite ends, is that right?

A. Yes. But we used it automatically reversing.

Mr. Howson: If the Court please, I did not examine this witness about anything on the direct that Mr. Darby is now trying to inquire into. I did not call this witness for any such purpose, and he did not testify with reference to it.

Mr. Darby: If the Court please, the witness has testified that this is one of the most important things in connection with the machine. I certainly am entitled to find out what he was equipped with before he got this most important thing and see what the difference is between them. The witness obviously knows what he is talking about.

The Court: I think the cross-examination has proceeded as far as legitimate inquiry will allow you in that respect. [fol. 95] It was upon that theory that I permitted you to cross-examine him as far as you have. I will limit it to where it is now.

Mr. Darby: If the Court please, I don't want to be unduly insistent, but all that I want to get from the witness is the statement, at least sufficient to correct the erroneous impression that he made previously in the part of the examination that you permitted so as to make it clear that we were both talking about the same thing. Your Honor will recall the witness said a few minutes ago that they did not use reversely-threaded spindles. Now the purpose of the present inquiry is to have him correct that, or at least permit me to correct it because he misunderstands.

Mr. Howson: He has now said it had a reversely-threaded spindle.

The Witness: I was referring, of course, to the automatic reversible motion which we are using today in the cradle foot construction which we did not have in the beginning.

Mr. Darby: To crystallize it completely I wanted to put one question more.

The Court: Put your question and we will see what it is.

Q. You have, as I understand it then, as an attachment a spindle such as is illustrated by the reference numeral 11 in the Plaintiff's Exhibit 15 for identification on which was mounted threaded stops and mechanism for rotating in one direction automatically from the machine but hand [fol. 96] mechanism for rotating it in the opposite direction?

Mr. Howson: I object to that if the Court please because it is assuming to enter the prior art, and if we are going to do that in our case I will have to open fully as to the prior art, and that is not the——

The Court: I think he may answer this question.

Mr. Darby: Do you understand the question?

The Witness: Will you please repeat it once more.

Q. (Question read.)

A. That is what we started with, yes.

Mr. Darby: That is as far as I am going to carry the inquiry under your Honor's ruling.

The Witness: I am asked with reference to the cradle foot, whether this cradle foot is a split operation or whether it is a splicing operation. I will say that we have both. The spliced foot we started to make in 1929. I am speaking of the full-fashioned crade foot. The split in full-fashioned cradle foot, we began about the same time. We made both the split and the spliced. We are making both today.

With reference to the suture seam in our cradle sole, we use the so-called closed split. That is an overlap of two needles in the straight, and four needles in the curved portion. In the straight portion of the cradle sole we have two [fol. 97] needle laps and in the curved portion we have four needles.

We have used the herringbone type of suture, that is, the so-called open split, before we made any cradle feet. I would say we used it from 1923 to 1929 or 1930. The construction at that time was demanded by two very large customers. We did not use any attachment made, or which we got from the Textile Machine Works, in making that. I mean not this particular attachment in question.

I am asked to state by referring to the split cradle sole type of stocking that I have been testifying about why we used the two needle lap in the straight operation and the four needle in the curved operation, I will say, that we used the two needle in the straight operation because it makes a

very nice point and the four needle in the curved portion. We have been more or less compelled to do so until very recently because if we would not use the four needle overlap there would be two laps missing; by continuing the two loop overlap, there would be a loop missing there at the point where the stops shift, at least at one side. There would not have been the proper knitting where the shift takes place. As to whether it would be a commercial product or not I would say that it would be what I would term an imperfect product. Yesterday testimony was given by Mr. Meyer concerning a rocker motion. I understand what is meant by that term. These attachments that are supplied to us by the Textile Machine Works are supplied with a rocker motion. A rocker motion is necessary without any doubt. You could [fol. 98] not possibly use this attachment for any useful purpose without them. You could not make a fabric without it.

We have always used the two needle lap in the straight portion of the cradle sole. We never used anything else. We continued with two needle lap for the straight part and we made the four needle for the curved part.

I testified we began making cradle soles about 1929. A two needle lap is what we call a closed split seam. It is not a herringbone. At least I call a herringbone a so-called open split—a floating loop.

Q. In your present commercial stocking how much do you narrow the slipper sole from the heel, how many needles do you go over?

A. I don't understand your question exactly. What do you mean by that, how many stops you introduce to make the final sole with?

Q. Yes.

A. It varies with the construction. We have various constructions. We have four stops, five, six, seven, up to ten.

Q. And as low as?

A. As the demand is. Sometimes we make a wider sole for practical wear; for a dancing slipper it is desirable to make the sole very narrow.

Q. What is the narrowest you have used—two-needle? Or have you gone down that low?

A. Two-needle for the surface?

Q. Yes.

A. We don't go that far for commercial construction.

Q. Did you go as high as ten?

A. You understand, I am talking from the instep down to the sole portion.

Q. Can you give me the lowest. You have given me the upper limit, now I would like to get the lowest limit.

[fol. 99] A. I would say four stops; in other words, eight needles on either side.

Mr. Darby: That is all.

Redirect examination.

By Mr. Howson:

The Witness: Mr. Darby asked me about an attachment which I referred to as a one-way attachment without reversing motion that was used for making Pointex heels. I will state what a Pointex heel is.

A Pointex heel is a heel reinforcement that runs in a triangular line away from the selvage edge toward the instep. It makes a pointed design at the heel like a pyramid. That requires a motion of the reversely-threaded spindle in one direction only. We did not use that attachment for any other purpose outside of that. At the time we first procured from the Textile Machine Works the attachment involved in this case, that is the attachment with the automatic reverse, the Textile Machine Works at the same time was still selling this one-way attachment for making a Pointex heel. The attachment with the reverse-threaded spindle was sold for a higher price than the price of the regular one.

As to what caused us to purchase the reversely-threaded spindle attachment at a higher price, instead of continuing to purchase the one-way attachment for making Pointex heels. I will say that the reversely-threaded attachment or the new attachment is decidedly better for greater designing possibilities. In other words, the prior attachment was sold for a single purpose of making a pointed heel, and the [fol. 100] new attachment was adopted to make a variety of designs.

I was asked about tiltable stops and I was asked whether the attachment sold to us by the Textile Machine Works with the reverse motion had tiltable stops, and I replied in the affirmative.

Q. Will you state what you referred to or did those stops have a rocking motion in operation or a tilted motion?

A. That was to put them in or out of operation.

I was asked about making open split seam work; in making work of that kind, there is required a rocking stop. In doing work of that kind, we used the split sole attachment referred to or shown in Fig. 35 of Plaintiff's Exhibit 6. That is the kind of attachment we used for open split.

As to what extent we manufactured for sale and sold hosiery with that open split work as made by use of the rocking part, I will say that I can, of course, only roughly estimate it, but I would say we made close to two million dozen pair. That was a perfectly commercial salable article—at least at that time.

I stated that in addition to making the open split work, we also at a later period started to make closed split work. We did work of that kind on this same attachment.

As to what we did to the attachment in the making of the closed split, I will say that we did not use the rocking motion with the stops. We just simply stopped the machine by the use of a lever as given in the attachment to make the stationary stops. That was a well known practice in the art in [fol. 101] connection with the manufacture of stockings. We were accustomed to do that.

Mr. Howson: I think that is all.

Recross-examination.

By Mr. Darby:

Q. Mr. Hemmerich, I think you told me on my first cross examination that there was sold to you as part of the attachment a rocker movement, is that right?

A. I could not tell you that exactly whether it was from the very beginning. We are buying today the machines and the rocker motion goes with the attachment.

Q. In your first cross examination——

A. When we bought the attachments—I think I recall we bought the rocker motion separately. As to whether these rocker motions are rather expensive, I will say that I don't know the exact price.

Q. Were any attachments made to the old spindles that you had in your machine? That is, was any equipment supplied by the Textile Machine Works which consisted only of the necessary mechanism for rotating the reversely-threaded machine you had on the machine as an attachment in both directions instead of one?

A. When we changed over, yes. I included all of those as attachments acquired from the Textile Machine Works; whereas all that they supplied us with was the pawl and ratchet mechanism for rotating the spindle in the opposite direction.

Q. You also said in your re-direct examination that in operation of the stops that you have on this attachment, it did not tilt in operation, is that correct?

A. I meant operation as such.

Q. Yes.

A. The stops in the spindle, you mean?

[fol. 102] Q. The stops controlled by the spindle, do they tilt while the machine is in operation or don't they?

A. Not in most of the machines, no. It is just stationary. You set them for a specific purpose.

Q. And they remain there?

A. Until the design is made or until you want to use a certain carrier or whatever you want to do.

Q. The only movement that is imparted to them is drawing them out of the operation, is that right?

A. For our purpose, yes.

I referred to a particular type of stocking we made, and I mentioned the volume being in the nature of two million dozen pair. That was the open split stocking. It was made with a suture seam. It was not a zig-zag design. It was what is called commercially an open split seam, but a perfectly straight seam. It did not by design incline to the wale.

Mr. Darby: That is all.

Redirect examination.

By Mr. Howson:

Q. Will you state whether or not there is any reason why an open split seam inclined to the wale would not be just as operative as a straight open split?

A. Well, I would not say there is any objection; it would be just as desirable commercially as a straight one.

Mr. Howson: That is all.

Recross-examination.

By Mr. Darby:

Q. I will ask just one question. Can you produce a commercial stocking with a two-needle split with the suture [fol. 103] inclined to the wales?

A. You mean the closed split?

Q. No, an open split.

A. An open split. Well, we haven't tried that yet, but we could produce a two-needle split all right, with the attachment which we have at the present time. We have demonstrated that. We have made a style, a foot style, where the curved part, the cradle part of the stocking, is combined of two needles or two loops.

Q. I recall to your mind the testimony that you gave me as to why you used the four-needle split in the curved portion of the cradle sole.

A. Why we use it, because at the time when we began making the curved portion or the so-called cradle-foot construction as a Cotton sole construction at that time we were not able to make the two needles overlap; our attachment did not allow us to make that, and we made a four-needle overlap.

Q. To make the matter perfectly clear, and to be sure that you and I are talking about the same thing, you understand me to mean by a two-needle open split, a suture, herringbone suture, that is your understanding?

A. When I talk about the curved part of the stocking, I am not talking about the open split at all.

Q. You are not talking about the open split?

A. Not about the open split. We never made an open split seam in the curved part of the stocking.

Q. I think you explained to me the reason why you did not is because the stocking would not be commercially practicable if you did that?

A. I did not say that.

Q. You did not?

A. Not to my knowledge. I misunderstood your question then.

[fol. 104] Q. Didn't you say that?

A. Because if we have never made it, I could not say whether it would be commercially salable or not.

Q. Didn't you state that there would be loose threads in that case?

A. When I spoke about the two-needle overlap or the two loop overlap in the curved part, I referred to the closed split seam which we operated all the time.

Q. Do you recall testifying in cross examination a few minutes ago that the reason why you did not use the two-needle open split was because you could not produce a practical stocking that way?

A. I was referring to the closed split.

Q. You were referring to the closed split?

A. Yes, because we did not experiment with the open split at all.

Q. Then, you don't know why you adopted the closed split instead of the open split?

A. We adopted the closed split long before we even thought about cradle-foot construction. We adopted the closed split because we considered it a stronger connection. There was criticism on the open split in the straight foot construction at the time on account of the irregularities with which the seam was made and for that reason we started using the closed split construction; what was introduced at that time in competition with the open split seam and we proved conclusively over a period of years that it was generally acepted in preference to the open split.

We use the two-needle closed split. We don't use the two-needle open slit any more. We did use it only in the straight construction and in the construction which was naturally also straight when we introduced it in 1929 or 1928 as the so-called Cobler (?).

[fol. 105] It is my testimony that I see no reason why the two-needle open split should not be used at an angle to the wales. I mean by that it can be sold just as well as the other one, to the same extent——

Q. My question is you see no particular difficulty in the manufacture of two-needle open split?

A. I would not answer that question, because I am not able to answer the question on account of not having any experience with it.

Redirect examination.

By Mr. Howson:

Q. Mr. Hemmerich, one more question: Assume that you were going to make an open split seam on an angle to the wales, it would be necessary to have a four-needle

overlap instead of a two-needle overlap; will you state whether or not there is commercially any objection to a four-needle split?

A. None whatsoever.

Mr. Howson: That is all.

F. Elwood Struve, called as a witness on behalf of the plaintiff, being duly sworn, testified as follows:

Direct examination.

By Mr. Howson:

The Witness: I am 45 years of age; I live at 6204 Fairhill Street, Philadelphia, general manager of Apex Hosiery Company. The business of the Apex Hosiery Company is the manufacture and sale of full-fashioned hosiery. I have [fol. 106] been connected with that company for eighteen years. I am general manager there. I have had about 33 years of experience with full-fashioned hosiery machinery. The product of the Apex Hosiery Company is a high-class product, exclusively. We have about 400 machines; 20 sections of each. That means as to the daily production of hosiery, about 4500 dozen pairs per day. That is a mill of large size relatively as compared to hosiery mills in general. I have positively no connection of any kind with the plaintiff in this case, the Textile Machine Works nor does the Apex Company have any connection with it.

We use full-fashioned knitting machines manufactured by the Textile Machine Works.

I am familiar with an attachment put out by the Textile Machine Works as a reinforced selvage or shadow clock attachment with reverse motion.

I understand the illustration on page 3 of Plaintiff's Exhibit 32, as an illustration of that attachment. I can state about when we first purchased such an attachment. It was August, 1927. We have purchased others since, right along. Every machine in our mill has that attachment on.

As to the type of work we have used them for, I will say that we make pointex heels,—double pointex, various kinds of fancy heels and shadow reinforcements, French heels and shadow clocks, cradle-feet and so on. We have found the attachment very satisfactory for this work. The at-

tachment is all-important as an addition to the regular full fashioned knitting machines, because it is very simple, [fol. 107] accurate, easy to set, easy to operate, and it has great possibilities as far as design and reinforcements are concerned. The capacity for making these various designs is very much of importance in connection with the manufacture of full-fashioned hosiery.

Mr. Howson: That is all.

Cross-examination.

By Mr. Darby:

The Witness: We first acquired the attachments with reverse motion from Textile Machine Works in 1927. That was equipped with a single chain. It was equipped with solid stops.

Q. Was it equipped with rocking movement?
A. You mean the first attachment?
Q. Yes.
A. Before 1927?
Q. No, after 1927?
A. That was equipped with stops.
Q. They were not rocker stops?
A. No.
Q. They were provided with means for the stops to be removed entirely?
A. Yes, sir.
Q. Were the attachments that you acquired complete in themselves or did they use some equipment already in the machines?
A. Well, it is practically the same equipment, only it has improvements.
Q. You had in your machine at the time reversely-threaded spindles, did you not?
A. Yes, we had the spindle on account of the two blocks.
Q. It was likewise equipped,—your spindle was likewise equipped with pawl and ratchet for turning it in one direction?

Mr. Howson: I object, if your Honor please; he is again [fol. 108] going into the prior devices. I did not call this witness to testify to anything at all with reference to the prior art, and it is not germane to the direct examination.

Mr. Darby: This has nothing to do with the prior art. I am trying to find out what this witness was supplied with.

The Court: Objection sustained.

Mr. Darby: May I note an exception?

The Court: Yes.

Q. In those instances where what you have described as an attachment that you acquired that you had used and that was already on the machine, will you please state just what was acquired from the Textile Machine Company?

A. Do you mean different from what we already had?

Q. Yes.

A. Well, we had a reverse motion.

Q. That was acquired?

A. That was acquired. That consisted of a chain operated directly from another chain and different parts that I can not describe.

Q. That is the levers and cams?

A. Yes, that is right.

Q. And the pawl and ratchet?

A. That is right.

Q. And that was attached—that pawl and ratchet—was attached to the spindle that you already had on the machine?

A. What you may call a pawl, an additional ratchet which would operate in the opposite direction.

That is what I described as an attachment which we acquired from the Textile Machine Works. We also acquired a rocker movement. That was included as part of the attachment.

[fol. 109] We made pointex heels before we acquired the attachment from the Textile Knitting Works.

Q. But the attachment, as you first acquired it from the Textile Knitting Works, did you use that attachment for making split fabrics?

A. We made split fabrics, yes.

Q. What type of sutures did you employ?

A. Just what do you mean by that?

Q. Was it two-needle open herringbone, or was it two-needle closed suture, or was it four-needle?

A. We made both. We made the herringbone and the closed split.

Q. Herringbone and the closed split?

A. Yes.

Q. Both two-needles and four-needles?

A. No, just two-needles only. Where we made a herringbone, it was a straight suture; it did not incline to the wales.

Q. Was there any reason why you did not or could not use the herringbone type of suture at an inclination to the wales?

A. Well, we were required to do that because we had abandoned that split way before this attachment came out.

Q. So that you had no occasion to incline the suture of the herringbone split to the wales?

A. Never. We use now the closed split seam and cradle foot.

We do use split work on the legger occasionally. We use it for instance on the black heel; colored heels.

Q. And you do that in split work rather than splicing?

A. Well, there is a combining there between different colors of the heel and the instep which is a natural color.

I know the difference between a splice and a split.

[fol. 110] Q. My question is, in making the black heel, is that a reinforced splicing or is it a straight split operation?

A. That is a straight closed split seam. It is a two-needle lap.

We have made shadow clocks. Spliced shadow clocks. There is a reason why we never made split shadow clocks. We did not have the attachment at the time we wanted to make them. We have never made split shadow clocks since we had that attachment because it is not desired. It is not in demand at the present time.

The Court: You mean no commercial demand?

The Witness: No commercial demand.

As to whether there is no manufacturing reason why it would be undesirable I would not say at this time. I believe it can be made if we have to.

I testified we did make four-needle lap design closed splits. We are now making them with a two-needle lap. On the curved portion we make them four needles. There is a reason why we changed from the four to two. It is essential there to make the four needle on account of the shifting; shifting on making the curves. You have to use the four needles to make a close binding there.

There is no objection at all to a four needle lap. I believe that a two needle lap is more desirable than a four needle lap.

Q. Why?

A. I never had that question brought to me.

Q. You must have had some reason for believing so? I merely want to get your reason.

[fol. 111] A. Well, there is no reason at all only that it is a finer reinforcement there; a finer seam there.

Q. In other words, it is not quite as bulky as a four needle lap?

A. That is not as wide.

Q. Not as unsightly?

A. Well, the split seam is not so sightly either.

Q. I was wondering whether it is not being so wide that you think it preferable?

A. Well, the split seam was always manufactured that way with the two needle overlap. That is the reason it has been made that way. In other words, it gives you sufficient binding; the two needles gives you sufficient binding and there is no reason to make it four needles.

Q. You have said that it is not as bulky and that it is not as wide.

A. I did not say that. You said that.

Q. You do not agree with me?

A. No, I do not.

Q. It would be impractical or improper to say that the two needle overlap——

A. In fact we are making them now with four needles.

Q. Let me ask my question, please. It would be improper to say that the two needle lap is preferable to the four needle lap because it makes a less bulky suture?

A. That is what you say; not me.

Q. You do not agree with that statement?

A. No.

Mr. Darby: That is all.

Redirect examination.

By Mr. Howson:

Q. Mr. Struve, when Mr. Darby was speaking to you [fol. 112] about the attachments that you procured from the Textile Machine Works, and I am referring now to the attachment with the reverse motion, and you have testified that you first started to get those some time in 1927, I want to know when those attachments were furnished to you by

the Textile Machine Works, were they furnished as complete attachments or simply parts?

A. They were furnished as complete units.

Mr. Howson: That is all.

(Witness excused.)

PAUL KROENER, called as a witness on behalf of the plaintiff, being first duly sworn, testified as follows:

Direct examination.

By Mr. Shaw:

The Witness: I am 32 years old; I am living at 1527 Garfield Avenue, Wyomissing, but I am employed as the sales representative of the Textile Machine Works. I have been employed by Textile Machine Works about fifteen years. Before I became sales representative I had been employed as a draftsman and was finally foreman of the department of knitting machine information. I have been in the division of knitting machine information approximately ten years,—since August, 1925. That is a division of the engineering department.

[fol. 113] Q. What were your duties in that division of the engineering department with regard to the products of the company? In other words, were you in any way familiar with the products of the company that were shipped out from time to time?

A. Yes, sir. I received the orders and scheduled the products for machines and attachments, and so forth; routed them through the shop and checked them off when they were shipped. I had charge of books showing the receipt of orders and the shipment of machines from time to time. I had charge of our order books; open and closed orders. By "closed order books" I mean completed orders; orders that have been shipped.

I am familiar with the attachment made by the Textile Machine Works called at times the reverse motion attachment. I am shown page 3 of Plaintiff's Exhibit 32, and asked what that shows. I will say that that is a reversible reinforced selvage attachment. The majority of the reverse motion attachments which I sold were like that shown in that photograph.

I have prepared a compilation showing month by month shipments of the reverse motion attachments from the time of the first sale until I left the knitting machine information division.

The time that I changed from one division to another was the first of this year. I produce the compilation to which I have referred.

Mr. Shaw: Witness produces compilation which I ask to have marked, and offer in evidence as Plaintiff's Exhibit 36.

(Marked Plaintiff's Exhibit 36.)

The Witness: The date of the first shipment of the attachment that I have identified was in August, 1927. The total [fol. 114] number of sales of this attachment to January 1st, 1935, was 6,790. The sales of the attachment were made both independently of the machine and with machines.

As to what the practice was with regard to the use of the attachments on the machines I will say that practically every machine was equipped with that attachment.

The records show with regard to the length of time when the machines were sold with the attachment as follows:

I believe the last machine sold without the attachment was in about the middle of the year 1930 or 1931, and that machine incidentally was shipped out of the country; it was an export machine. As to what had been the practice of the company before that time, I will say that the majority of the machines before that time were also equipped with the attachment.

Q. Can you state the number of attachments that were sold between August, 1927, the date of the first sale, and April 17, 1928, independently of the machine itself?

A. I believe it amounts to about 410. Between the same dates I believe 184 were sold with machines.

Considering the early months after the attachment was put on the market, the geographical distribution of the shipments were as follows:

At first I believe the attachment went in and around Reading, Philadelphia and the vicinity and they gradually spread. I notice that September they were also in and around Philadelphia, whereas in October they started to spread to North Jersey, and in November we shipped the first attachment to the South. They went to North Caro-

lina. Incidentally we shipped the first attachments to [fol. 115] Canada that month. In December we shipped the first attachments out into the West. We also have continuous shipments to Philadelphia and Reading and also some to the South and North Jersey. That continues into January, February, March, April and May.

Mr. Shaw: You may cross examine.

Cross-examination.

By Mr. Darby:

Q. Do your records show what each sale consisted of?

A. As a unit, or you mean——

Q. What the equipment consisted of?

A. The equipment consists of an attachment.

Q. Does that include the rocker movement, or do you know?

A. I would not know the price of it and the price would inform me whether it would have a rocker motion or not.

Q. Could you tell which of the sales listed on this exhibit were the instances where you merely supplied the reverse movement actuating the members such as the additional pawl and the gear wheel?

A. Well, this list includes all the entire attachment; not only reverse motion. That is the entire attachment. That gives you a complete total of the number of attachments that are in use, irrespective of whether you supplied them as a unit or whether you supplied them as missing parts.

Q. To make sure that I correctly understand your exhibit, am I correct in understanding that the first attachment was sold on August 22nd?

A. I do not believe I mentioned any date. August in 1927.

Q. You did not mention any date here, but in the trial [fol. 116] in New Jersey you gave the date as August 22nd, 1927.

A. If I gave that date, that must have been correct.

Q. I see that you have sold a grand total of 1919 attachments before the patent in suit issued on May 21, 1929. Can you tell from your records how many attachments were sold during the month of May, prior to May 21st?

A. If I am not mistaken, I furnished you with that information on the last trial. Am I right or not?

Q. You promised to, but through the hurry in the completion of the trial I did not find it in the last record. I would like to have that.

A. We could get that information for you, I am certain.

Mr. Darby: I will try not to forget it this time.

Redirect examination.

By Mr. Shaw:

Q. Mr. Kroener, this compilation that you have prepared, do those figures represent units or attachments or parts that may be converted through mechanism into this attachment?

A. This is an entire attachment.

Q. And mere parts would not be included. That shows, in other words, the number of completed attachments shipped out as completed attachments by the company?

A. That is right.

[fol. 117] CHRISTIAN F. MEYER, resumed the stand.

Mr. Darby: If the Court please, in the cross examination of this witness I am going to first address myself to the first point that I mentioned; insufficiency of disclosure.

Cross-examination.

By Mr. Darby:

The Witness: I am familiar with the patent in suit. As to whether I am familiar with the abandoned application of which it purports to be a substitute, I will say that I have seen the abandoned application. I cannot say that I studied it very intensely. I have not read over the specifications of the abandoned application. I have examined the drawings of the abandoned application just superficially.

Q. I am concerned initially with the same subject that we covered in the New Jersey suit concerning the mechanism for actuating the reversely-threaded spindle for the patent in suit, and I direct your attention to Fig. 1 of the drawing of the patent in suit, and likewise to Fig. 1 of the abandoned application of which the patent in suit appears to be a substitute, and ask you if the drawings are the same?

Mr. Howson: I object, if your Honor please, to the reference to the abandoned application. The witness was not examined about the abandoned application. It is not in evidence and not in the case so far and the examination [fol. 118] that refers to it is not germane to the direct examination.

Mr. Darby: There is a lot in what Mr. Howson says if he is going to insist on that. If he insists on that objection I won't press it. I thought we could save time. I might say, of course, that the patent in suit on its face refers to the abandoned application and so while I recognize the possible force of Mr. Howson's objection, I don't think it is entirely controlling, but I will abide by your Honor's ruling.

The Court: Objection sustained.

Q. Will you please point out in the specification of this patent in suit the description of the mechanism for imparting movement to the pattern chain 70?

A. As much of the description as there is in the specification of that particular arrangement is on page 3, beginning at line 112:

"To cause selective engagement of the pawls 25 and 26 before referred to, and thereby determine the direction of rotation of screw-shaft 11, I preferably employ as shown, a second pattern chain 70, to which step-by-step movement is imparted by the operation of cam 35a on a lever carrying the pawl 71 (Fig. 1) to impart movement to the ratchet wheel carrying the pattern chain aforesaid having studs 72 operating a spring-pressed lever."

Q. But that, I believe you agree with me, is the only description in the specification of that mechanism, is that right?

A. That is true.

[fol. 119] Q. Will you please refer to what mechanism is shown in the drawings for accomplishing that purpose. Refer first to Fig. 2, which is a plan view of the machine, is it not?

A. That is true.

Q. No mechanism whatever is shown, is there?

A. None.

Q. Figs. 3, 4 and 5 show no mechanism for that purpose, do they?

A. Figs. 4 and 5 have nothing to do with that whatsoever, but Fig. 3 shows part of the mechanism.

Q. Which is what?

A. It shows the shift rod here.

Q. The shift rod?

A. The shifter.

Q. The shifter rod 40?

A. That is right.

Q. And that shifter rod 40——

A. Appears in Fig. 2 (indicating); 40 and 41.

Q. 40 and 41 in Fig. 2?

A. Yes.

Q. But that shifter rod is not connected between the main shaft 5 and the chain 70 in any respect, is it?

A. Not in that view, no.

Q. Nor is the machine in Fig. 2?

A. Nor in Fig. 2, correct.

Q. The shifter rod merely shifts the position of a roller relative to a cam?

A. It appears to do so in that view, yes.

Q. There is nothing shown in Figs. 6, 7, 8, 9 or 10 relative to——

A. They are not related to that subject.

Q. Not related to that subject?

A. That is right.

Q. Now, we come to Fig. 1. There is shown in Fig. 1, unnumbered, unidentified and undescribed mechanism to the right of the roller or cam which is marked 35, is that right?

A. Is what right?

[fol. 120] Q. That there is shown to the right of cam 35 a number of levers, posts which are unidentified by reference numerals?

A. Partly.

Q. In what respect is my statement not right?

A. Because here is a numeral 71 (indicating on drawing).

Q. All right. Now, will you please describe to me from this drawing alone just how that works?

A. Yes.

Q. And the reason why I am asking you to do it from the drawing alone is because in your direct examination you described that operation from the drawing, Exhibit 15?

A. Would you perhaps prefer to have the enlarged patent drawing?

Q. Yes, surely.

A. You can follow that better.

(Drawing produced.)

A. (Continuing.) Now, in Fig. 1 the shifter 41 which is shown as the right hand shifter of the two shifters fastened to rod 42, there is a little angle which I might call a bracket and which is fastened to this shifting member. The top of that bracket, the vertical part of that angular bracket carries the fulcrum of a lever, the short end of which is extending over to the cam 35a, that is the active cam of the attachment, of the shifting device there, while the other end, the longer end is extending to the center of a connecting rod which goes in vertical direction—the shorter connecting rod there.

Q. This one (indicating)?

A. That one, yes. And on the top of this connecting rod is the—the top of that connecting rod is fastened to the [fol. 121] lever which carries the pawl 71, that being the pawl which gives a rotating motion to the chain 70 with its buttons 72.

When the shift rod 42 shifts, the small extending end on the left hand side of the horizontal lever comes under the active cam, is depressed by that active cam and naturally the other end goes up and, with it, takes the vertical rod and moves the pawl forward. In that way the motion is supplied to the chain ratchet.

Q. Then, as I understand you, you have a long rod here, unnumbered, fulcrumed about a pivot point very near its end?

A. Correct.

Q. Is that right?

A. That is right, yes.

Q. And what is this device out here under this rod that you refer to as standing vertical?

A. That is merely a support for the end of that lever; the same as many supports of that kind are provided in such constructions.

Q. And the device works, according to your description, by this rod 42 moving to the left?

A. Right.

Q. Carrying with it those two arms, 40 and 41, which brings the end of this long unnumbered rod under a cam surface, 35a?

A. Correct.

Q. Which rocks it about this very short pivot point?

A. Yes.

Q. And which, incidentally, has thrown this rod off its support, is that right?

A. As soon as it begins to depress it, it moves it off its support.

Q. But it is drawn to the left, too, isn't it?

A. Somewhat, yes, that is right.

Q. And in consequence this rod, the vertical rod you have referred to, is supposed to move to the left and forward [fol. 122] at the same time, is that right?

A. Well, not exactly at the same time, no.

Q. Well, it has to move to the left when the rods 40 and 41 move?

A. It has almost completed its movement to the left before it is elevated.

Q. It must move to the left and forward, must it not?

A. A very short period, yes.

Q. And then you say this pawl rotates the gear wheel on the chain 70?

A. That is what I say, yes.

Q. That description is not contained in these specifications, is it?

A. Not as fully as I made it, no.

Q. It is not contained at all.

A. Part of it. That is to say that motion is imparted from the cam shaft to the pawl.

Q. And you testified as a witness in the New Jersey suit, did you not?

A. I did.

Q. And you heard the testimony of the plaintiff's expert, Mr. Dahn, in that case?

A. I did.

Q. And your explanation here given differs from the explanation he gave there?

Mr. Howson: I object, if the Court please. It is a comparison with another witness——

The Court: Yes. Objection sustained.

Mr. Darby: I submit, may I not be entitled to show that this theory of operation is different from the theory of operation that was advanced in the New Jersey suit?

The Court: You can ask him whether it differs from any-
[fol. 123] thing he said before but I would think whether it is different from something somebody else said makes no difference. What your expert said——

Mr. Darby: No. His expert; the plaintiff's expert.

The Court: It makes no difference what some other witness may have said. If he made any statement in conflict with what he says now, you have a right to show it.

Mr. Darby: No, it was not his statement but he is making a statement which is contrary to the position that was taken by the plaintiff in the prior suit.

Mr. Howson: No; no, I beg your pardon.

Mr. Darby: By the plaintiff's expert in the trial of the suit.

The Court: That is not the way to show it.

By Mr. Darby:

Q. We will go a step further, Mr. Meyer. I think that you have testified that it is absolutely necessary in a device of this kind for the shaft 5 to move to the right during narrowing operation?

A. Yes, I testified to that.

Q. And the patent points out the necessity for that in this, beginning at line 63, page 4:

"The purpose of preventing operation of the screw-actuating means at this time arises out of the fact that if such means should happen to operate during narrowing the sinkers would cut off the yarns at the fabric and so cause [fol. 124] press-offs and seconds."

A. I testified especially to that, yes.

Q. Do you agree with that statement?

A. Yes, indeed.

Q. Will you refer to Fig. 1 again. First, let me ask you this: if shaft 5 was moved to the right as shown, the roller on cam 45 would fall off the cam?

A. As shown it would, yes.

Q. Likewise the roller on the cam 51 would fall off of the cam?

A. Correct.

Q. Likewise the roller on cam 14 would fall off, would it not?

A. Also correct.

Q. Likewise the roller on the right hand cam 14 would fall off?

A. Yes.

Q. With the result that when the rod 5 was shifted back to the left or was intended to be shifted back to the left, it would be impossible to move that to the left as shown, isn't that correct?

A. That is correct.

Q. So that as shown the device is absolutely impractical and inoperative—as shown, is that right?

A. As shown here, yes. That is right.

Q. I will now go a step further. If the shaft 5 is shifted to the right for the purpose of preventing the actuation of the reversely-threaded spindle during narrowing, the cam surface 34a would come under the roller which rests on it, wouldn't it?

A. It would.

Q. What would happen?

A. The device would work.

Q. That is, the spindle itself would rotate, wouldn't it?

A. Correct.

Q. With the result that as shown it would accomplish [fol. 125] the very thing which, from a practical viewpoint, you must avoid?

A. With the reservation as shown I agree with you.

Q. Likewise if your theory of operation of chain 70 is correct, if the cam shaft 5 were shifted to the right it would bring the cam 35a over the end of this short portion of the rod—the long rod that rests on the support, and cause actuation of the chain 70, is that correct?

A. Partly, yes. Not unless a button would happen to be there at the moment.

Q. It would cause actuation of the chain 70?

A. Yes. Pardon me, that is correct.

Q. It would cause actuation of the chain 70?

A. That is right.

Q. So that as shown, if I constructed a machine just as shown in that drawing, could I produce a workable, practical device?

A. If you would construct a machine just as shown in the drawing you could not make anything at all. You could not even knit.

Q. The patent shows and describes the undercut type stop, does it not?

A. It does, yes.

Q. That is the only type of stop which is shown?

A. Right.

Q. And the undercut type of stop is undercut so that when the carrier rod hits the full part, the stop racks upwardly a little bit and permits the carrier to travel into the undercut portion?

A. Correct.

Q. For the purpose of making a floating loop?

A. Correct.

Q. That is the herringbone type of suture?

A. Yes.

Q. That is an open suture?

A. Yes.

[fol. 126] Q. Does this patent show or describe any means for lifting that stop; either of those undercut stops?

A. Not in the drawing.

Q. In the specification?

A. It refers to it in the specification.

Q. Show me where, please?

A. Now, here I would start at page 2, line 92:

"The special rod-stops 7, 7 (see Fig. 1) employed in my novel attachment, act in a manner similar to the action of the well known 'Split-foot' stops heretofore employed in making split seam work, which stops however merely oscillated and did not travel lengthwise of the machine. In Figs. 3 and 4 of the drawings the stops are shown as having undercut portions at 10 which are desirable for split-seam work. My invention, however, is not limited to the use of these specific stops for this specific purpose but they may be used for all purposes for which stops are used."

Q. My question, Mr. Meyer, was, is there anything in the specification that describes how these stops can be lifted out of action?

A. No, not how. It only gives an indication that they are intended to be so lifted out.

Q. And what you have read is the basis on which you read your belief that there is an indication that it is intended they be lifted out?

A. Not the only basis.

Q. Well, give me all of it. What other bases have you in the specifications?

A. The reference to the old well known split sole attachment.

[fol. 127] Q. You read that.

A. Which, as I described here yesterday, is provided with well known means in the art for over thirty years to lift such stop out of contact with the cam and use either as a rocking stop or stationary stop.

Q. What I am trying to get from you, Mr. Meyer, is a basis in this specification other than what you have read.

A. This very quotation right here. Mr. Schletter refers very plainly to it. He says, "similar to the action of the well known split-foot stops."

Q. That is your basis for your belief that he intended to use removable stops, is that correct?

A. I did not say removable. He intended to use stops which could either be oscillated or stationary because that is old in the art and was always used with the split sole attachment as long as it was made; almost as soon as the machine was made.

Q. Have you given me every part of the specification on which you rely?

A. I believe so.

Q. You will agree with me, will you not, that it would be impossible to produce the stocking shown in Fig. 10 unless it was possible to lift out the stops, the rocking stops, out of operation?

A. No, I do not agree with you.

Q. You do not?

A. No.

Q. How are you going possibly to make a course below the design unless you remove the stops?

A. By using another carrier rod.

Q. By using another carrier rod? What do you do with the stops and the carrier rods controlled by them?

A. Well, we have no abutments on that carrier rod. It just passes underneath the stops.

[fol. 128] Q. Then, how would you take the carriers that knitted portion B out of action?

A. By removing the friction box.

Q. And just cut off the thread? You would have to cut off the yarn?

A. Will you kindly repeat that again. Perhaps I did not understand you right.

Q. As I understand it, you have got carriers working between stops which are moving back and forth in accordance with the design B or Fig. 10, is that correct?

A. That is correct.

Q. When you come down to the end of the design, the lower part of the stocking, they cease to function?

A. That is true.

Q. Is that right?

A. That is right.

Q. And consequently you have your carrier running the entire width of the blank?

A. That is the new carrier, the carrier which begins to knit at that point. That is true.

Q. In other words, you use another carrier at that point?

A. Yes.

Q. Rather than continue to use either the carrier knitting A or the carrier knitting C?

A. Oh, I must do so.

Q. And you would—how would you get out of action the stops which have controlled the rod and left the edge of the design?

A. There are two ways. One of them would be to put them out of action by disconnecting from their friction box, and another one would be by lifting the split-sole stops out of the way and removing them. The thread I would have to cut in either case.

Q. And the second way is the way it is done in practice, isn't it?

A. Yes, that is right.

[fol. 129] Q. Namely, lift the stops out of the way?

A. Namely, lift the stops, yes.

Q. In the patent as shown there are two separate pattern control motions shown?

A. Yes.

Q. One is the pattern chain 55 and the other is the pattern chain 70?

A. Correct.

Q. There are no other pattern chains shown in the patent, are there?

A. Right.

Q. What mechanism is provided in the patent for tilting the stops?

A. There is no mechanism shown in the patent.

Q. What mechanism is provided on the commercial machine of the plaintiffs for tilting the stops?

A. Two hooks which are on the outer end of the cam levers and are used to put those cam levers out of contact with their respective cams, in that way eliminating the oscillating motion of the special stop 7. I imagine the court knows just what I am referring to.

Q. Does not the patent show means for rocking the stops so as to permit the splice—the delayed movement—into the undercut operation?

A. That is true.

Q. Referring to means for rocking the stops, of the undercut type, what is the means that are provided in the patent for that?

A. Perhaps I did not quite understand that. Means for rocking the stops?

Q. Means for rocking the stops so as to permit——

A. Why, there are connecting rods here and here (indicating on drawing) which are connected to certain cam levers.

Q. You mean connecting rods 16 and 16?

A. They are connecting rods 16 and 16 which are connected to cam levers.

[fol. 130] The Court: Which drawing are you looking at?

The Witness: Fig. 1, your Honor. (Continuing.) Which are connected to cam levers or rollers 15—15. These rollers are working on cams 14—14, and these cams give to those rollers an oscillating motion which, in turn, is transmitted by those two connecting rods 16—16 to a horizontal rod 17. Is that sufficient?

Q. No, go ahead.

A. This horizontal rod which, of course, participates in that oscillating motion is so arranged with openings in the special oscillating levers 7—7 which are passing loosely over these rods, so that while they are oscillating with the rod at the same time can be moved to the right or to the left with the advancing of the motion.

Q. Do both of the stops rock at the same time?

A. Naturally, yes.

Q. And they rock at the end of each course, do they not?

A. Yes.

Q. So they rock together and at the end of each course and I assume that that is accomplished by shifting your cam on which the levers 16—16 operate, is that right?

A. Certainly.

Q. That movement is not controlled by the pattern chain at all, is it?

A. That movement is not controlled by the pattern chain, no.

Q. So that it would be quite erroneous for me to say that this rocking movement of these stops is effected by pattern control means?

A. That is not effected by pattern control means, unless you consider the turning of the cam such pattern control means. In a certain sense they are.

[fol. 131] Q. It certainly would not be pattern chain control means?

A. Certainly not.

The Court: Well, they owe all their movement to the cams that control 16?

The Witness: That is right, your Honor.

Q. I want to get some information now generally apart from this patent. A straight, flat knitting machine is used for manufacturing other material than stockings, of course?

A. Surely, yes.

Q. They manufacture underwear, for example?

A. Yes.

Q. And in machines of this character it is customary to narrow just like you would narrow in producing stockings?

A. In some of them, yes.

Q. And it is likewise customary to widen as well as narrow, isn't it?

Mr. Howson: Mr. Darby, are you going into the art, or——

Mr. Darby: No.

Mr. Howson: You are going beyond the direct examination.

Mr. Darby: I am not going into the art at all. We will put it this way: on its face it is going into the art but for no vicious purpose, but if you have objection to it——

Mr. Howson: Well, as long as you are not going to be vicious——

Mr. Darby: All right.

Mr. Howson: If you get vicious, I will handle it.

Q. With that subject again deferred, I will take you back to the patent: in the manufacture of a fabric in which the [fol. 132] stops are tilted with undercut portions, they are tilted simultaneously at the end of each course of the type of suture as made?

A. An open split. A crow-foot split or herringbone split, whichever you prefer.

Q. They would not make any other type of suture, would they?

A. Oh, yes.

Q. With them rocking simultaneously?

A. Not with them rocking that way, no.

Q. The type of undercut stop employed by Schletter in his patent and illustrated by him is the same type as is illustrated in the Textile's book, "Full-Fashioned Knitting Machine" which is in evidence as Exhibit 6, as illustrated on page 54, is that correct?

A. That is correct to a certain extent. It depends, Mr. Darby, what you mean when you say "that type." As far as the rocking motion is concerned and the undercut, it is the same.

Q. That is what I meant, and I am willing to confine it to that. The undercut portion of that stop with the added traveling of the carrier is absolutely necessary to produce the herringbone split, isn't it?

A. It is.

Q. I would like to have you examine this figure and then I will ask you if that is what you mean by a herringbone split (exhibiting to witness)?

A. It looks like it, yes. It is a very imperfect drawing, but I think it is.

Mr. Darby: May I have this marked for identification.

(Marked Defendant's Exhibit A for identification.)

Q. And when the patent refers on page 3 at line 28 to the laying of the floats of the split seam, that refers to a [fol. 133] herringbone split suture?

A. It does.

Q. Now, when you float a thread such as you do in producing the herringbone split, as I understand, you can have the sinker noses all of the same length?

A. You can, yes, but you would not get a very perfect fabric.

Q. In order to be able to do it practically, you have the sinker noses of different lengths, isn't that so?

A. Not necessarily.

Q. Have you ever seen a machine equipped with sinker noses of the same length and produce a commercial product of herringbone?

A. I really could not answer that; not to my recollection, but I never looked for that.

Q. You have seen machines producing herringbone seam, haven't you?

A. Many years ago, yes.

Q. And they used sinkers of different lengths?

A. I must repeat, I don't know.

Q. You don't know that?

A. No, sir.

Q. Then you do not know of your own experience, that in order to produce a herringbone suture,—an open suture, that it is necessary to have alternate short and long nose sinkers?

A. I beg your pardon, Mr. Darby, I did not say that. I only said that I did not recollect having seen any in a machine.

Q. I hope you will bear with me. You must realize I am not as expert as you are.

A. I do realize that.

Q. I assure you I am not attempting to mislead you, of all people. Then your personal experience with producing [fol. 134] herringbone sutures has been so long ago, am I correct——

A. I think you are correct.

Q. (Continuing.) —that it would be futile for me to follow that line of inquiry now?

A. That is for my own practical experience,—my own view of it in a machine; but as far as the theory of it is concerned, that I can answer.

Q. Then theoretically is it preferable?

A. It is preferable but not absolutely necessary.

Q. Why is it preferable? That is what I was getting at; will you please explain the reason why?

A. Yes, sir, on account of the floating loop, it is not necessary but it is preferable that a sinker which is at the very position where that loop is formed, is somewhat shorter in order to draw less thread for that particular loop.

Q. In other words, it has a bearing on the question of tension on the thread?

A. Yes.

Q. And unless you adjust for the tension on the thread, you are apt to get too much tension at one loop and not enough on the next, is that correct?

A. You might and you might not; it depends on the individual case.

Q. But that is what they are afraid of?

A. That is the underlying theory, yes.

Q. Now then, if that underlying theory is correct, and if you want to make allowance for the difference in tension on the thread in making a herringbone suture, if you were going to use a diagonal herringbone suture, the alternative long and short nose sinkers would have to extend throughout the entire area in which you are altering the course of the suture, is that right?

A. Certainly. That is quite a common occurrence.

[fol. 135] Q. So that as a result, if you are going to make designs anywhere between the selvage edges of a stocking, you would have to have alternate long and short nose sinkers throughout the entire bed, is that right?

A. Yes, that is true.

Q. Now, would the use of alternate long and short nose sinkers be practical in producing sheer full-fashioned silk stockings?

A. Certainly. Why not?

Q. That are being produced today commercially?

A. Certainly.

Q. You are quite sure of that?

A. Yes.

Q. Positive?

A. Yes.

Q. Do you ever sell any machines, that is the plaintiff? Did you ever sell any machines with alternate long and short nose sinkers?

A. Yes, we did.

Q. When, how long ago?

A. That I cannot recall now.

Q. Since 1927?

A. Yes, since 1927.

Q. Producing stockings?

A. It produced stockings, absolutely.

Q. Do you recall to whom it was sold?

A. Oh, I beg your pardon. I must have misunderstood your question. Did you ask whether I ever sold them that way?

Q. Yes.

A. No, we did not.

Q. How long has it been since you have ever sold any?

A. Never, to my recollection.

Q. You never sold machines with alternate long and short nosed sinkers?

A. No. I misunderstood you, Mr. Darby.

Q. Are you familiar with the catalogue of your company?

A. Yes.

Q. I show you here a catalogue of the Reading Machine, [fol. 136] January, 1929,—the Reading Machine is generally referred to as the Textile, is that right?

A. That is right.

Q. That is Plaintiff's machine?

A. Yes.

Q. I call your attention to page 175 of the January, 1929, catalogue and ask you if it does not show on it both long and short nose sinkers?

A. Yes, it does.

Q. That is part of the equipment that you folks manufacture and sell?

A. Certainly.

Q. And you sell long and short nose sinkers for use in flat knitting machines?

A. If it is so desired.

Q. Do you ever equip them with the short nose, if you sell them?

A. No, those are made on special order.

Q. What are they used for, do you know?

A. Oh, for various purposes. Some use them on selvage —of course, that depends on the use these various manufacturers want to make of them. I cannot tell.

Q. They use them on a straight herringbone seam, don't they?

A. Yes, some of them do. All of them, practically, I guess.

Q. We will refer once more to the patent, Fig. 1: I call your attention to the roller 34.

A. Yes.

Q. Is that right?

A. Yes; you mean the cam.
Q. Cam 34; it has a cam surface 34a, is that right?
A. An active cam surface.
Q. An active cam surface 34a?
A. Right.
Q. And that cam is intended to act on the roller mounted on the shaft 32?
A. Yes.
Q. To lift up the arm 73, is that right?
[fol. 137] A. No, that is not right. It is to lift up another arm which moves the pawls.
Q. That is right.

By the Court:

Q. What is the number of that arm, sir?
A. 29 and the other——
Q. The other is not marked?
A. No, it is not.

By Mr. Darby:

Q. Now, there are two such arms, referring to Fig. 2, 29 and 29a, is that right?
A. That is right.
Q. That is referring to Fig. 2, 29 and 29a and the cam 34 and 34a which operates on one arm is duplicated for operating on the other arm, is that right?
A. Yes.
Q. It is shown best perhaps in Fig. 1. So that the cam surface 35a is similar to the cam surface 34a and is provided for the same purpose, namely the lifting of rockers of the shaft 32, actuating the arm 29 and 29a, is that right?
A. Yes.
Q. Now, I wish to refer to your commercial attachment. You have been familiar with the attachments put out by your company, as chief engineer since its first one, I presume, is that right?
A. That is right.
Q. Is the attachment illustrated in Plaintiff's Exhibit 33 like your present commercial attachment?
A. In principle, yes.
Q. What does this particular drawing illustrate,—the [fol. 138] first type of attachment you put out in 1927 or the type that you are putting out today?

A. The very first few attachments that we put out differed somewhat from those, in minor construction; but on the whole, this is the attachment that we have been putting out.

Q. That is what I want to establish. I want to establish in what respect,—it may not be important to you, but it might be important to me,—in what respect this drawing differs from the drawing of the machine which you put out in 1927?

A. In the respect that the slides 7 which are shown in this attachment were not present in the first attachment. Instead of that there was a solid rigid slide similar to the one shown in the Schletter patent.

Q. There is a rigid slide with an undercut portion?

A. No undercut portion.

Q. So the first attachment you put out in 1927 had stops without undercut portions?

A. That is correct.

Q. Were those stops tiltable?

A. Yes.

Q. Did they rock with each stroke of the machine?

A. No, of course not.

Q. They did not rock at all?

A. No, there was no necessity for that.

Q. Did they use the mechanism for actuating the gears, the ratchets, and the wheels of the reversely-threaded spindle which is illustrated in the Schletter patent?

A. I must again say I do not remember that.

Q. Did they use that just as it is shown there?

A. No.

Q. Did the attachment in 1927 use the lock, safety lock [fol. 139] device, that is employed in the Schletter patent?

A. I know what you mean. Yes,—we will understand each other——

Q. I am referring to this separate locking mechanism that you described in considerable detail, in Figs. 1, 11 and 12.

A. Not in the same construction, no.

Q. When did you change from the style of the stops that you first used in 1927, to the style shown in Plaintiff's Exhibit 33?

A. Oh, I should say about ten to twelve months after. I am not quite sure of the date.

Q. Was it before or after the defendant came on the market with its product?

A. It certainly was before that.

Q. You are sure of that?

A. I think so. I am not sure of it; I would have to look it up. I cannot remember.

Q. The stops employed in Plaintiff's commercial machine are very much like the stops employed in the defendant's machine, are they not?

A. They are very much so, yes.

Q. And if you did adopt it as you believe within eight or ten months after you first came out on the market, that was before May 1, 1929, is that right?

A. Perhaps I will have to modify that answer a little bit, Mr. Darby.

Q. All right.

A. When you say when "we did adopt it," I take it to be understood when it became standard; when we sent it out universally. This might have been that long or it may not have been that long. I am not sure of that, but we certainly put out these stops in isolated cases almost immediately after the attachment was brought on the market.

[fol. 140] Q. Then if I understand you now, your eight or ten months pertains to the time when you made it standard?

A. Pertains to the time when we made it standard.

Q. And in the commercial machines that you sent out from the very beginning, you only used one pattern chain for controlling the direction of rotation as well as the actual rotation, is that right?

A. We did, that is right.

Q. Instead of the two pattern chains as shown in the Schletter patent?

A. That is right.

Q. I think you testified that you do not use the roller shift in your commercial attachments; that you do not use the roller shifts for locking devices for controlling rod 42?

A. That is correct, yes.

Q. As shown and described in the patent. And of course, you don't use the same mechanism of cam arrangement relative to the camshaft 5 as illustrated in the patent?

A. The cam arrangements are very similar. The shifting mechanism is different. The mechanical details are different.

Q. And your attachments were provided with rocker motions?

A. Yes.

Q. And no rocker motions are shown or described in the Schletter patent?

A. Well, by "described" you mean——

Q. I mean not described as such.

A. That is right.

Q. How long have you been familiar with the defendant's attachment?

A. I think almost since it came out.

Q. The defendant's attachment came out about 1927 or 1928?

A. Oh, no; in 1928,

Q. The defendant's attachment with respect to the de-
[fol. 141] tails that I have reviewed with you differs from what is shown, as shown in the Schletter patent in the same respect that the Textile Machine attachments do, is that correct?

A. I agree with you on that.

Q. Do you recognize these attachments as attachments which are being manufactured by your company at the present time and offered for sale?

A. Yes.

Q. These attachments are pictured on the advertising leaflet produced by your company?

A. Correct.

Mr. Darby: May I have it marked for identification?

(Marked Defendant's Exhibit B for identification.)

Q. Do you recognize this attachment as shown on page 11 of the Knit Goods Weekly of August 5, 1935, as an attachment produced by your company?

A. Yes, sir, I do.

Q. You also recognize that as an advertisement by your company of that attachment?

A. By the fact that it bears the name of the company; I have nothing to do with advertising matter.

Q. You also recognize the attachment shown?

A. Yes.

Mr. Darby: I ask to have that marked for identification.

(Marked Defendant's Exhibit C for identification.)

[fol. 142] Mr. Darby: Now, Mr. Howson, I intend to go so far in the prior art in the cross examination of the witness' statement as pertains to the direct examination concerning the patent on that machine.

Q. I think you testified that the flat knitting machine was first created in England by Mr. Cotton.

A. Pardon me; the Cotton machine.

Q. The Cotton machine?

A. Not the flat machine.

Q. I think historically speaking you will agree with me that the machine until prior to the war was mostly developed, largely in Germany?

A. That is true, yes, sir.

Q. Will you agree with me that it was not until after the outbreak of the war that your company made sales of substantial numbers of the machines?

A. No, I do not agree with you on that.

Q. You made substantial sales prior to the operation of the war?

A. Those sales that we made before the war were very substantial to us.

Q. But they were more substantial in number since the outbreak of the world war?

A. Naturally, sure.

Q. In referring to this Defendant's Exhibit 6, of the equipment shown in there, that was of equipment available on the market before the Schletter patent was made available to the market by your company, was it not?

A. It was published in 1920.

Q. And it illustrates, in good part, equipment which you had been selling since 1914?

A. Partly; I suppose you are right; I could not say that unless I looked it up.

[fol. 143] Q. For example, the narrowing mechanism illustrated on page 42, was mechanism that had been supplied with machines sold by you since the time of the war, beginning of the war, 1914?

A. That is right.

Q. That narrowing mechanism consisted of a reversely-threaded spindle which you could rotate in either direction as you desired?

A. Within certain limitations, yes.

Q. And what are those limitations?

A. I have given a very full description of that yesterday.

Q. In the mechanism shown here, the one ratchet has twice the number of teeth as the other ratchet?

A. That is correct.

Q. One of the limitations you refer to is that it rotates two needles and comes back one?

A. And that is all.

Q. And that is all?

A. That is the limitation.

Q. If you want to rotate two needles and come back two needles, would you, as a mechanic know how to do it?

A. No.

Q. You would not?

A. No.

Q. By merely increasing—putting the same size ratchet on the spindle as you have on the other spindle, wouldn't that do it?

A. No.

Q. Why not?

A. Because the movement of that particular pawl is adjusted in such a way that it is only sufficient to move it to the length of the smaller teeth.

Q. Do you know as a mechanic, if you wanted to you could move two needles forward and two needles backward?

A. I would not say that offhand.

Q. You would not know how to move one alone?

A. One alone, certainly.

[fol. 144] Q. Would you, as a mechanic, know how to move alternately one in one direction and one in the other?

A. I would not, because I would have to depend exactly on the same motion. They are operated from one and the same shifting gear.

Q. You would not know — to cause the spindle K to move either in one direction or the other direction at will independently of the other, from the mechanism shown here for moving in one direction two needles and one back one needle?

Mr. Howson: If your Honor please, I object to the question. I do not see where it is leading. Certainly I did not ask the witness to make any changes in these devices. This was simply referred to him in his explanation of the machine. The whole thing is hypothetical and it is not germane to the direct examination.

Mr. Darby: The witness himself emphasizes the fact, if the Court please, that this was limited to this one thing and no more. Now, I want to find the limitations, if any,

that the witness had in mind when he made the statement as emphatic as he did.

The Court: The objection will be sustained.

Mr. Darby: I note an exception.

[fol. 145] Christian F. Meyer, resumed the stand.

Cross-examination Continued.

By Mr. Darby:

Q. Mr. Meyer, will you refer to page 2 of the specifications of the patent in suit, which says, beginning at line 83:

"My invention, among other things, relates to special stops for these rods 6,6,6,6, affecting the yarn-feed movements thereof, and for simplicity of showing I have indicated in the drawings only the rods themselves, it being understood that they carry thread guides and abutments such as shown in Figs. 11 and 12 and perform their usual functions as heretofore."

Now, Figs. 11 and 12 do not show any thread guides or abutments, do they?

A. No, it does not.

Q. Figs. 11 and 12 relate to something entirely different from that as described, right? They relate to this automatic locking mechanism, isn't that so?

A. That is correct.

Q. And have nothing to do with the threads or abutments. Also note at page 2, line 120:

"Stops such as herein illustrated are used for making spliced or plated figures on a plain fabric and for split seam work, the split seam stops being undercut as in Fig. 4 and the others not undercut as in Fig. 16."

[fol. 146] There is no Fig. 16 in the drawings, is there?

A. No, there is not.

Q. As a matter of fact, there is no stop shown not provided with undercuts in the drawings, are there?

A. No, there are not.

Q. This patent was acquired by your company in or about November, 1929, subsequent to the issuance of the patent in suit, wasn't it?

A. That is right.

Q. I will refer to the drawing of the Hofmann attachment, the Hofmann attachment being the one that was before the New Jersey court?

A. Yes.

Q. I will refer to it if necessary, but I don't believe it will be necessary for this question. You are familiar with it, are you not?

A. I am familiar with it, yes.

Q. The Hofmann attachment could make only a four-needle lap, isn't that correct?

A. Yes.

Q. And no mechanism is shown in the Hofmann attachment or provided in the Hofmann attachment that will enable it to make a two-needle lap split, is there?

A. You mean on a curved line?

Q. Yes.

A. No, there is not.

Q. The defendant's attachment here before the Court makes a two-needle lap split on a curved line, doesn't it?

A. It does not.

Q. It does not?

A. No.

Q. How about on a straight line; Hofmann can make a two-needle lap split on a straight line?

A. Anyone can do it.

Q. The defendant likewise can make a two-needle lap split on a straight line?

A. Yes.

Q. You have previously testified on cross examination [fol. 147] that the type of suture made by the structure shown in the patent in suit, is a herringbone suture, that is correct, isn't it?

A. Amongst others, yes.

Q. Didn't you testify, as shown in the drawings, it only makes a herringbone split, isn't that a fact?

A. No, I did not testify to that fact.

Q. Can the structure shown in the patent in suit make anything but a herringbone split?

A. Certainly it can make another, a closed split, a shadow clock work, any reinforcing work—anything you want.

Q. Without the change of the mechanism as shown in the patent?

A. Without change in the mechanism in the patent.

Q. Then, it is your testimony that the structure shown in the patent in suit without alteration can make a type of split other than the herringbone split?

A. Absolutely.

Q. The defendant's machine cannot make a herringbone split, can it?

A. No.

Q. The herringbone split with the floats is the type of split which is described by the patentee in the specification as being made by his structure, is that correct?

A. I say again, amongst others, yes.

Q. Referring once more to the structure of the patent, where does the chain 70 if actuated in the manner that you have described, move with reference to the time of movement of the reversely-threaded spindle 11?

A. You mean when does the chain move? It moves at the same time when the spindle is giving the turn.

Q. In other words, the selective chain control 70 moves at the same time that the reversely-threaded spindle 11 [fol. 148] moves to vary the distance between the nuts?

A. Yes, the chain, yes.

Q In the catalogue of your company which you identified yesterday at page 186-31, appears the following statement:

"In the manufacture of full-fashioned stockings having a pointed heel reinforcement or reinforcement in which the edges make an angle with the wales of the fabric, it is absolutely essential that means be provided on the machine to furnish a variable rocking motion to the regulation shaft as the reinforcement is widened or narrowed. If this is not done, the fabric will be drawn or puckered wherever the reinforcing thread is added. Where no rocking is done the loops are not large enough to accommodate an extra thread and thus resulting in an unsatisfactory fabric."

Is that a correct statement?

A. Yes, that is correct.

Mr. Darby: May I have marked for identification page 186-31 of the Plaintiff's Parts Catalogue of 1930.

(Marked Defendant's Exhibit D for identification.)

Q. Does the patent in suit show any rocking movement or mechanism for it?

A. Not that type of rocking movement in that paragraph that you have just read. That is not shown.

Q. Is it mentioned in the specification?

[fol. 149] A. It is not mentioned either. It has nothing to do with it.

Q. Are clocks made by a split suture, that is shadow clocks made by a split suture as distinguished from spliced sutures commercially practicable?

A. Why not? They are.

Q. You say they are?

A. Yes.

Q. Have you ever known of clocks made by split suture rather than spliced suture being marketed?

A. Not to any extent, no.

Q. Have you known of them being ever marketed by anyone?

A. Marketed? No.

Q. They are not marketed?

A. No.

Q. Do you know why not?

A. Very likely because they are very high priced. It is a slow process.

Q. Can the patent in suit in the structure illustrated in the drawing make a split design unsymmetrical?

A. No.

Q. In other words, as shown in the arrangement in the patent in suit, the steps of movement is always the same?

A. Always together, yes.

Q. That is, the movement of the stops and the spindle is always the same?

A. Yes.

Q. You stated in your direct examination that four-needle wide lap sutures are objectionable; will you state why?

A. I am quite surprised at that.

Q. I think it is on page 45. I will correct my statement. You stated at page 45 of the testimony:

"When the material is a little heavy and these four loops [fol. 150] lie on top of each other, it gives rather a heavy joint or seam there and therefore sometimes an open split is made in which the loops are inter-knitted somewhat differently."

A. That is right.

Q. Do you consider a heavy four-needle overlap to be objectionable in the modern sheer stockings?

A. There is no heavy seam in the modern stocking, because heavy yarn is not used any more.

Q. You do not consider a four-needle lap suture objectionable in the modern sheer stocking?

A. No, not at all.

Q. Do you consider a herringbone type of suture—a plain herringbone type of suture on a bias to the wales commercially practical?

A. Yes.

Q. Do you know of its having been used commercially?

A. I do not.

Q. When a straight herringbone is made at a bias to the wales to form a design, drop stitching holes are produced, are they not, at the point where the suture is at a bias to the wale?

A. No.

Q. The plaintiff company never sold an attachment which made a herringbone type of suture on a bias to the wales, did it?

A. They did not.

Q. Why not? Is there any reason for it?

A. Yes.

Q. What was the reason?

A. Because the herringbone split had been out of existence before we brought the attachment out. It was not made any more anywhere.

[fol. 151] Q. Is there any good reason why the herringbone split had gone out of existence?

A. Yes.

Q. Why?

A. It slowed down the machines; you have to run the machine slow to get a good looking herringbone.

Q. Why is it necessary to run the machine slow?

A. Because the overlap of the needles, that is, the movement of the carrier to go over has to be very accurate in its movement to produce the additional forward movement of the carrier, and it has to be slowed down because if produced too fast, they produce drop stitches.

Q. Prior to the time you turned out the attachment had you ever seen herringbone split at an angle to the wales?

A. Never.

Q. Is there any practical reason in addition to the reason you have stated against herringbone splits at all, why they are not done, to your knowledge?

A. To my knowledge there wasn't any attachment that would have enabled the manufacturer to make it.

Q. The type of suture that is being used in the commercial market today, is a closed two-needle lap, is that right?

A. Not necessarily.

Q. What other types are being used today?

A. Four needle or two needle or both, a combination.

Q. A four needle in the cradle sole?

A. Yes.

Q. The defendant's structure can make a two needle lap split on a bias to the wales, can it?

A. No, it can not.

Q. It can not?

A. No.

Q. Will you explain why the defendant's structure can not make a two-needle lap split?

A. Along the line?

[fol. 152] Q. Along the line according to the bias to the wales.

A. For the reason that this is a reversely-threaded spindle and both sides are moving at the same time—must move at the same time. For that reason, when you move the one inwards, you also move the other one inwards. Then when you get to the other side you have lost these two needles that you are going to overlap, you understand, and then on that side you are not getting a binding and there will be a little pinhole there that will alternate according to the direction in which you shift.

Q. Now, will you please refer to the photographs of the defendant's structure—the actual structure which is in evidence as Plaintiff's Exhibit 2, and state whether your last answer would be correct with respect to structures shown there, or in the alternative, state whether or not the actual physical machine of the defendant will make a two-needle lap on a curved portion of a bias to the wale?

A. No, I don't think so.

Q. You have studied these photographs?

A. I saw the machine and the photograph as far as this attachment is concerned, yes.

Q. Were you familiar with the patent affairs of your company in 1931?

A. Yes.

Q. Were you familiar with the patent that was applied for in 1931 and obtained in 1933 in the name of Gottlieb Bitzer for carrier rod control for split seam fabric?

A. Yes, I am.

Q. Is this the patent?

Mr. Howson: I object, if the Court please. It has nothing to do with the issues in this case.

[fol. 153] Mr. Darby: The witness has testified he was familiar with the patent affairs of the company and he was in charge of them, and I merely want to have this witness identify this patent. I will have a copy marked for identification.

The Court: It is identified under your stipulation, is it not? The stipulation is that copies may be received with the same force and effect as certified copies. It proves itself, does it not?

Mr. Darby: I was doing it out of an abundance of caution. I did not understand the stipulation goes so far as to stipulate that it is owned by the plaintiff company.

Mr. Howson: Is that what you want to ask this witness?

Mr. Darby: Yes.

Mr. Howson: I have no objection to that.

Mr. Darby: That is the patent. Now I am going one step further.

The Witness: That is the patent.

Mr. Darby: May I have it marked for identification, please?

(Marked Defendant's Exhibit E for identification.)

Q. I will go a step further and ask the witness if that patent does not show and describe mechanism for an attachment to enable procuring two needle lap?

A. Yes, it does.

Q. Two needle lap sutures at an angle to the wales of the stocking?

A. Correct.

[fol. 154] Q. And is it not a fact, Mr. Meyer, that beginning in 1931 or thereabouts that the structure of the Bitzer patent was included in all the attachments that you sold?

A. That is not a fact; no.

Q. What part of that statement is incorrect?

A. Some of them were sold with that attachment but a very small percentage.

Q. When did you start to sell the attachment with the Bitzer mechanism?

A. That I would have to look up. I could not recollect from memory.

Q. It was subsequent to 1929?

A. Yes, sir.

Q. And today are not all of the attachments that you sell provided with the Bitzer mechanism to obtain two needle lap?

A. Certainly not.

Q. All of the attachments that you sell are provided with some mechanism for obtaining a two needle lap and suture?

A. They are not.

Q. Then, as I understand it, some attachments that you sell are not provided with means to make a two needle lap?

A. The greater part of it.

Q. They are provided with means to make a four needle lap?

A. Correct.

Q. But they are not provided with means to make a herringbone suture at an angle to the wales?

A. No, sir.

Q. I call your attention to the aluminum model, Plaintiff's Exhibit 11 for identification, and ask you whether insofar as the reversely-threaded spindle and the nuts thereon and the stops carried by the nuts are concerned, that structure is identical with the structure shown in the drawings [fol. 155] of the Schletter patent?

A. Substantially so, yes.

Q. You also said yesterday that the structure as shown in the patent could make the design illustrated in Fig. 10 of the patent?

A. I did say that, yes.

Q. Will you illustrate on this model how that design could be made without taking the stops off of the machine?

A. You must be a little more specific in that question, Mr. Darby.

Q. Can you illustrate on this model how the design of Fig. 10 can be made below the pointed end of the design (indicating on Fig. 10)?

A. Yes, I can. You take it for granted that the design can be made by the application of these stops?

Q. Down to that point, yes.

A. Yes. When you come to that point do you want me to show you how that can be done without taking this out of operation?

Q. Yes.

A. When we come to that point I take these carrier rods which had been working down to the point where the design ends out of operation by disconnecting them from their friction box. Then I take this carrier here (indicating) and you will notice that carrier runs over the full width of the section without any alteration——

Q. Do you have to stop the machine to do that?

A. Yes, naturally.

Q. You stop the machine?

A. Yes.

Q. And take off the friction box which controls the movement of the carrier which is stopped by the two stops, is that right?

A. That is right.

Q. And it is only the friction box on the carrier which [fol. 156] travels between the two stops?

A. It is not the friction box. It is the carrier rod.

Q. It is the friction box on that carrier rod that is the only one you take off?

A. No. I have to take off the ones that are operating; the carrier rods that are marking the design naturally. I say naturally disconnect these carriers which have been in operation to that point from their friction boxes and I do connect this rod (indicating)——

Q. How many carriers do you have to take the friction boxes off?

A. Three carriers.

Q. And you stop the machine for that purpose?

A. Yes.

Q. And what happens to the thread carriers on the rod—on the carrier rods—from which you have taken off the friction boxes?

A. We have to let them stand idle.

Q. Stand idle?

A. Yes.

Q. So that they are standing idle between the selvage edges of the stocking being knit for the rest of the operation of producing Fig. 10?

A. That is true, yes.

Q. And you have got another thread carrier that swings back and forth over that idle carrier throughout the rest of the operation?

A. Yes.

Q. Is that practical in a commercial machine?

A. That is not the usual way to do it, if you ask me that.

Q. Is it practical in a commercial machine?

A. It is not very practical, but it is possible.

Q. You, as a skilled engineer, would not permit that operation in your factory?

A. If I were compelled to make it in that way, certainly.

Q. When you leave this idle thread carrier between the [fol. 157] selvage edges, do you cut the thread?

A. Yes, you have to cut the thread.

Q. I call your attention to Plaintiff's Exhibit 17. Can you state what kind of a suture is in the diagonal part of the design?

A. The diagonal part of the design is a closed split suture.

Q. Would it be correct to describe that as a herringbone two needle lap?

A. Not this, no.

Q. That is entirely a closed suture?

A. A four needle closed split suture.

Q. Will you refer to the foot portion? What kind of a suture is that?

A. That is a two needle open split suture, in the straight portion of the foot.

Q. Two needle open split. That is what I have been referring to as a herringbone split?

A. Well, that is the same thing.

Q. Will you examine that suture again carefully, Mr. Meyer, in the leg portion, both inside and outside, to verify that that is a closed four needle lap rather than an open two needle with a float, a two needle lap?

A. On the diagonal?

Q. Yes. Do you see the float threads in there?

A. My statement is still the same.

Q. There are no floated threads on the herringbone in this suture?

A. No.

Mr. Darby: That is all.

Redirect examination.

By Mr. Howson:

Q. Mr. Meyer, you have described one way in which the device as shown in the model, Plaintiff's Exhibit 11 for identification, would be used in making the fabric of Fig. 10 of [fol. 158] the patent. State what, if any other ordinary way of using the attachment would be for making the same pattern?

A. The usual way which would be employed very likely in a knitting mill would be to take the stops 7 and remove them from the path of the abutments of the carrier rods, and then take these carrier rods and lay them out, as the expression is, that is, take them out of the way and use the additional rod for making the end of the stocking.

When I speak of lifting the stops so that they would be out of action, that is the ordinary procedure in a knitting mill and always has been.

Q. Mr. Darby referred you to page 186 of plaintiff's parts catalogue, Defendant's Exhibit for identification D. I call your attention to the statement to which Mr. Darby directed your attention and ask you to explain what, if anything, that has to do with the attachment that we are interested in here in this case?

A. That is the rocking motion mentioned, is it? (After examining catalogue.) Yes. It has nothing to do whatsoever with this attachment. It is entirely separate from it and it is entirely a different motion which can be employed with many other things the machines do.

Q. And the particular attachment an excerpt of the description of which Mr. Darby read to you, is not the attachment as manufactured and sold under the patent in suit?

A. Not at all, no.

Q. Mr. Darby called your attention to a statement in the specifications to the effect that abutments would be used on the carrier rods and a reference to Figs. 11 and 12 which you agreed was an error?

A. I beg your pardon?

[fol. 159] Q. (Question read.)

A. I did not agree it was an error, I think. I think I said that was true, that no abutments were used.

Q. No abutments shown in those particular figures.

A. Yes.

Q. That is what I meant. Now what I want to ask you is whether the absence from the patent of any showing of abutments on the carrier rods has any significance whatsoever in the understanding of the patent by anyone familiar with full-fashioned knitting machinery.

A. No, is has not. Those abutments that are spoken of are little bits of steel which are fastened to the carrier rods and which are coming against the respective stops that are to stop the carrier rods.

They are illustrated in the model, Plaintiff's Exhibit 11 for identification. They are these little steel pieces there (indicating on model) and when the carrier rod moves they come against the stop.

Q. What I want to know is whether such abutments on carrier rods—abutments to strike against stops—are or are not an ordinary part of the equipment of full-fashioned knitting machinery?

A. Oh, yes, certainly. That has been so always. In fact, the machine would not run without the abutments.

Q. I want to refer to your testimony of yesterday in which you said that if you would construct a machine just as shown in the drawing, you could not make anything at all. "You could not even knit." I wish you would amplify that a little more, Mr. Meyer; and explain just what you mean.

A. When I said that, I meant to indicate that if the ma- [fol. 160] chine would be built exactly as shown by the patent drawing you could actually not knit because all essential parts that belong to the machine are not shown in the drawing. Amongst them—well, I may say the chain motion which shifts the camshaft and which is really necessary to work this is not shown because it is old in the art, everybody knows it; and therefore, as it is customary in patent drawings, it is not shown. Only the parts that are absolutely essential are shown—and new.

Then another instance is with the narrowing cams which are not shown. Mr. Darby asked me yesterday when the camshaft shifts doesn't that roller fall down, and that roller fall down, and doesn't this come in the wrong position, and so on, and I always said "yes," because as shown in the patent drawing that is true, but what is not in the patent drawing is an essential part of the machine, the narrowing cams, without which the machine could not work at all and every man trained in the art knows that and for that very

reason the narrowing cams have been omitted from the drawings, as I said before, as is customary in such patent drawings. With the addition of the narrowing cams of course the picture is quite different.

Q. Then you have said that no attention has been paid in the patent to the shifting of the narrowing cam; that is, the means for shifting the cam, and so forth, but, as I understand you, that is all a part of the full-fashioned knitting machine.

A. That is an absolutely essential part.

Q. May I ask you whether in this model identified as Plaintiff's Exhibit 11 for identification you have placed on [fol. 161] the camshaft the narrowing cams as they would be required in the full-fashioned knitting machine if the patentee had gone so far as to illustrate that part of the knitting machine?

A. Why, the model is, as a matter of fact, provided with the narrowing cams in order to enable me to demonstrate it. I could not have demonstrated it if I had not the narrowing cams in. In putting the narrowing cams on the model I utilized such cams in the ordinary, usual manner.

Mr. Howson: I will offer in evidence this model which has been referred to and ask that it be marked Plaintiff's Exhibit 11.

(Plaintiff's Exhibit 11 for identification marked in evidence.)

Mr. Howson: I also offer in evidence the drawing which has been marked Plaintiff's Exhibit 15 for identification and ask that it be received as Exhibit 15.

(Plaintiff's Exhibit 15 for identification marked in evidence.)

Q. Mr. Meyer, I wish to refer you to typewritten page 131 of yesterday's record. In the 8th line from the bottom there is a paragraph beginning "When the camshaft shifts, the small extending end on the left hand side of the vertical lever," and so forth. Will you please look at that and state whether that is correctly reported or whether there should be a correction in it?

A. Oh, yes. It should be when "the shifting shaft shifts." I was referring to the shaft 42.

Q. And what about the word "vertical" there on the second line?

A. That should be "horizontal."

[fol. 162] Q. And in the 4th line of the same paragraph the expression is "the other end goes forward and with it." That word "forward" should be "upwards."

Q. Will you turn to page 148 of your examination of yesterday. Mr. Darby asked you this question:

"Q. If you are going to make designs anywhere between the selvage edges of a stocking, you would have to have alternate long and short nose sinkers throughout the entire bed, is that right?

A. Yes, that is true."

A. No, that is not true.

Q. Will you state what, if anything, you have to say in reference to that?

A. I must have misunderstood and thought he said the entire width of the design. Of course we do not alternate short nose sinkers all over the bed. If we wanted to make a design somewhere between the selvages, if that happens to be an inch wide, you only need those for that portion of it.

Q. Now, will you refer to page 151 of the typewritten record of your cross examination and to Fig. 1 of the patent in suit which Mr. Darby directed your attention to. The first full question at the top of page 151 refers to a shaft 32, and I would like you to look at the drawing and state whether 32 does represent a shaft, or if you wish to make a correction in that regard. In that same connection I also refer you to page 5.

A. No. Fig. 1 shows that very clearly, and Fig. 5 shows [fol. 163] it in detail, I believe. (After examining figure): Yes. Fig. 5 shows very clearly that it is what is commonly known as the roller stud; that is the stud on which the rollers 30 and 31 shift. That is not a shaft. A shaft must give the impression that it would be running through from one lever to the other. Each one of these levers has its independent roller stud 32.

Q. Page 153, Mr. Meyer, the 8th line from the bottom, the reporter has a reference to something which occurred almost immediately after the "patent" was offered on the market. That word should, I presume, be "attachment"?

A. Oh, yes, certainly.

Q. When this attachment of the patent in suit in the form you have described was brought out will you state whether or not it was the practice of your company to furnish just parts for the purpose of converting your attachment into the attachment of the patent in suit?

A. No, it was not.

Mr. Howson: That is all.

Recross-examination.

By Mr. Darby:

Q. Mr. Meyer, I think it has been testified several times that some of these attachments you sold had a variable rocker motion with them. There is no question about that, is there?

A. Yes. There is question about that.

Q. You sold variable rocker motions with them?

A. May I ask what you understand by "variable rocker motion"?

Q. I will give you a technical definition of it, if I may. I mean a rocking motion which rocks the needles so as to provide a looseness in the thread where the suture is being [fol. 164] made or in that course, is that correct?

A. Yes. Rocking motions like that were sold right along and it may have happened that occasionally an attachment was sold at the same time, But they were certainly not sold as a part of the attachment.

Q. Referring to this catalogue identified as Defendant's Exhibit D for identification, where it refers to a pointed heel reinforcement or a reinforcement in which the edges make an angle to the wales of the fabric that is accomplished by the attachment which you sold assertedly under the patent in suit, is it not?

A. Yes.

Q. Then he says it is essential in instances of that kind "that means be provided on the machine to furnish a variable rocking motion to the regulating shaft as the reinforcement is widened or narrowed"?

A. Yes.

Q. Now, that rocking motion does have to do with the attachment that you assertedly sell under the patent in suit, does it not?

A. That variable attachment has nothing to do with the attachment itself, no.

Q. No, but it has to do with the operation of the attachment, does it not?

A. To a certain extent, yes.

Q. And therefore when the statement is made that it is essential in the manufacture of full-fashioned hose with a pointed heel reinforcement, or reinforcement in which the edges make an angle with the wales of the fabric, you are referring to that rocking motion being essential to the operation of the attachment of the patent in suit?

A. Not necessarily that rocker motion—any rocker motion.

[fol. 165] Q. But it does include that. This statement——

A. That statement does include it, yes.

Q. There seemed to be a little doubt in your mind according to your redirect examination as to a subject we covered in cross examination as to the operability of the structure as shown in the patent which makes it necessary to review that very briefly. The structure as shown in the patent will not work, will it?

A. I admitted that before, yes.

Q. It will not knit anything. It will not operate itself irrespective of whether additional material or machinery is or is not shown?

A. Not unless that additional material is furnished.

Q. But irrespective of any other part of the knitting machine, this structure as shown in the patent itself will not work, will it?

A. Not unless those additional parts of the machine are furnished.

Q. Just forget any additional part of the machinery entirely.

A. But they are inseparable, Mr. Darby.

Q. Just forget any additional part of the machinery, Mr. Meyer. This device will not work—the device shown in the patent in suit will not work because of the fact that when the shaft 5 is shifted to the right the rollers will all fall off as shown?

A. This device as shown in the patent drawing will not work, no.

Q. Irrespective of whether there are any other parts of the knitting machine there or not that is true?

A. No. That is not irrespective of that. If they would be there it would work.

Q. If you had your narrowing mechanism there that

[fol. 166] would not make this part, this attachment, work, would it?

A. No, but other mechanisms; not the narrowing mechanism.

Q. Now, another thing: I think you stated in your direct examination that the patent describes the shifting of the shaft to the right to prevent the spindle 11 from turning. That is the desired result.

A. I did, yes.

Q. But as shown in the patent itself, shifting the shaft to the right would make the spindle revolve, would it not?

A. As shown in the patent, with the same understanding as before, because the addition of the cams would also change that condition.

Q. The addition of the spindles for narrowing would not do it, would it?

A. The addition of the spindles for narrowing would not do it, no.

Q. So that as shown in the patent, what actually happens is diametrically opposite to what the patent states is necessary to be done, namely, the patent states that you must prevent the rotation of spindle 11 when the narrowing is taking place, whereas actually as shown, the only time you effect operation of the spindle 11 is when narrowing is taking place, that is true, is it not?

A. As shown there, without the narrowing cams, yes.

Mr. Darby: That is all.

[fol. 167] FERDINAND THUN, called as a witness on behalf of the plaintiff, being duly sworn, testified as follows:

Direct examination.

By Mr. Howson:

The Witness: I am sixty-nine years, live in Wyomissing, which is a suburb of Reading, Pennsylvania, and I am secretary and treasurer of the Textile Machine Company, the plaintiff in this suit.

As to what length of experience I have had, in general, in connection with the manufacture of full-fashioned knitting machines I will say that we have been manufacturing full-fashioned knitting machines since 1900,—approximately thirty-five years.

I have a general familiarity with the Schletter attachment sold by my company, referred to as reinforcing selvage or shadow clock attachment with reverse motion.

It has already appeared that we actually purchased that patent from Schletter in 1929. It also appears that the attachments were placed on the market by the Textile Machine Works, prior to the actual date of assignment, back in 1927. I will explain that briefly.

When Mr. Schletter first conceived the idea of this improvement, he came to us and discussed the matter with us and we offered the facilities of our engineering department to him to develop it and to apply for a patent on the attachment.

The first application was prepared in our engineering department and during this entire period from 1921 to 1927 or [fol. 168] 1929, we were in constant touch with him, and in fact, our business relations with him were quite close, because we furnished him with machines for a new factory which he started, to exploit the invention involved in his attachment, and we furnished him with machines on a deferred payment plan.

The understanding between us and Schletter was that we were to have the exploitation of the patent so far as the mechanical part was concerned and the sole rights under it, but he was to have the right to patent designs for his own purposes.

Finally, in pursuance of that understanding, we actually took title to it in 1929. We paid $20,000 cash for it. As to whether our company own other patents I will say that we have, I think, 75 patents granted and about 25 or 30 more pending on knitting machines and parts thereof.

At the time we took over the patent and paid the consideration, we had a very thorough investigation made as to the validity of the patent.

I will state briefly what there is about the attachment that made us interested in it as an attachment for a full-fashioned knitting machine.

The attachment had possibilities which made the full-fashioned knitting machine practically a universal machine for style purposes as well as for quality purposes of merchandise, and the entire industry soon realized that it was indispensable, and the older machines that were in operation without an attachment of this kind were practically all,

with few exceptions, supplied with this attachment and had the attachment built into them.

I can tell how these attachments were priced. I have a [fol. 169] notation here. The prices in 1928 were $350 net and with the shadow clock, $400 net. Then in October, 1931, we made the attachment with shadow clock standard equipment and reduced the price to $350 net.

We have granted licenses under the patent. We licensed the Grosser Knitting Machine Company, who were the representatives of the German firm of Hintschel and furnished them with licenses for a total of 186 machines which they had sold to various mills, and for these licenses they paid us $75 per machine. We granted them a continuing license to sell at the same royalty. This is a photostatic copy and a true copy of the Grosser license.

Mr. Howson: We offer this in evidence. I assume you do not mind the fact that it is a photostatic copy?

Mr. Darby: I do not mind the photostat, but I would like the production of the original, to examine it. You may offer this now, but we request of record, the production of the original.

Mr. Howson: I offer that as Plaintiff's Exhibit 37.

The Witness: We have just concluded negotiations with several users of the defendant's machines in Reading and Easton, and one firm, the Chipman Mills, have paid a license fee through their patent attorney in Philadelphia, and the other, the Rosedale Knitting Mills were going to settle, I think on Monday and sign the license agreements and through their patent attorneys deliver them to Mr. Howson. [fol. 170] They have agreed to do that. We have, furthermore, negotiations pending with Robert Reinert, Inc., who is also an importer of German knitting machines, who is accepting the license terms made to his firm pending the return of Mr. Reinert from Germany, and I believe he is coming back in a few days. He made an application for a license.

Q. Are there any other competitors in the field, that is, for full-fashioned machines in this country apart from the Textile Machine Works, your company, and Grosser who has taken a license, Reinert, who has applied for it, and the Hofmann Company, the defendant in the New Jersey case, and the Hirsch Company in this case; do they represent your competitors?

A. Well, there is one, the Wildman Manufacturing Company, which has practically discontinued building full-fashioned knitting machines.

Q. And these other four that I have mentioned,—they are all importers of German-made machines?

A. Yes.

The average price today of one of these full-fashioned machines that we are speaking about, is around $8,000 for a 24-section machine. The machines have become more complicated and more complete, and consequently more expensive during the last ten years particularly, because of the added length. They started with 16 sections, but they are now practically a standard of 24 sections.

Mr. Howson: All right, that is all.

Cross-examination.

By Mr. Darby:

Q. Mr. Thun, when you bought the patent in suit, you bought another patent as well, didn't you, for this $20,000? [fol. 171] A. Well, we made it a condition that another pending application be included, but that was of rather an insignificant value to us. It practically resulted from the same original application.

Q. The other application which was included in your purchase was the one which was issued as the Schletter patent 1,752,206, copy of which I show you?

Mr. Howson: Yes, that is right, Mr. Darby.

A. Correct.

Mr. Darby: I ask that a copy of that patent be marked for identification.

(Marked Defendant's Exhibit F for identification.)

Q. You testified in the Hofmann suit, did you not, Mr. Thun?

A. Yes, sir.

Q. In that suit you made this statement: "I personally conducted negotiations which led ultimately to the purchase of the patent referred to and the patent in suit early in 1929. We paid $20,000. The transfer for that amount included a divisional application, the one I just showed you and a patent resulted from the divisional application.

That divisional patent was not an important part of the transaction. It was just thrown in." That is a correct statement?

A. Yes, that is right.

I conducted negotiations with Mr. Schletter when he first came to us. That was approximately 1921, I think.

[fol. 172] Q. And when did you first turn out a commercial machine embodying this attachment? I think one of your representatives stated that it was August, 1927; does that correspond with your recollection?

A. I have a notation here that in 1927 and 1928 we furnished a total of 594 attachments during that year.

Q. So that your first attachment under the invention that Mr. Schletter revealed to you in 1921 was manufactured and sold by us in 1927 and 1928, before the patent really was issued.

Q. Yes. Was there a demand between 1921 and 1927 for an attachment of this kind in the hosiery trade?

A. Well, the possibilities that this attachment furnished for meeting style trends, such as fancy heels and other things, naturally created a demand for the attachment.

Q. My question is whether a demand existed in 1921 for an attachment of this kind?

A. In 1921, there would have been a demand for an attachment of this kind if somebody had experimented with it and brought out new samples that appealed as novel and attractive.

Q. I don't believe you have answered my question yet. What I am trying to find out, Mr. Thun, is whether or not the styles or trends in the hosiery industry required an attachment of this kind between the period of 1921 and 1927?

A. Mr. Darby, the only thing I can say is that the style trends as they existed during that period were interdependent in a sense. The short dresses that ladies wore emphasized the style qualities of hosiery and the shoes more or less were made of a style to conform to the dresses and to the ensemble, and the stockings were part of it. Therefore the one helped the other.

[fol. 173] Q. Am I to understand from your testimony that there was no demand for an attachment of this kind during this period?

A. I would not say that. There always is a demand for something good and something new.

Q. Were pointed heels being manufactured during that period?

A. I don't know exactly when that started. The history of the pointed heel is perhaps instructive. Landenberger's patent was taken out, I think, in 1910 or 1912, and Landenberger went from Reading to Julius Kayser & Company, and perfected his stockings with a pointed heel.

Q. About that time in 1910 or 1912?

A. I am not quite sure as to the year, but it was before the war. He showed these stockings to Julius Kayser & Company, but they could not at that time see anything in them, and were content to have shop rights under this Landenberger patent. Landenberger sold it to Emery Beers.

Q. I think you have answered me enough. I am interrupting you with the consent of your counsel.

Mr. Howson: I just wanted to explain that we were getting a little remote from the question.

Q. Maybe I can get at it this way: You say there is always a demand for something novel.

A. New and something good.

Q. So that if this attachment had been brought out in 1921, would it have received, in your judgment, as great a demand by the hosiery manufacturers as it did in 1927 when you brought it out?

A. Well, in 1921 the industry——

[fol. 174] Q. Can't you answer that question, please, Mr. Thun?

A. Not without qualifying it. The industry in 1921 was relatively small, confined to a few people, and the pressure to bring out something new was not as great then as when the industry grew, when there were 350 concerns like there are now.

Q. How many were there in 1927?

A. I should say less than a hundred.

Q. Less than a hundred. Now, my question is in your opinion, if this attachment had been brought out in 1921, would it have been received just as freely as it was in 1927?

A. Not quite, because the style trend had then not been developed to the same extent.

I testified that we furnished machines to Mr. Schletter for the plant of Schletter & Zander. I also said it was for

the purpose of enabling Mr. Schletter to manufacture styles with attachments of this nature of the patent in suit.

Q. Did Mr. Schletter ever manufacture any attachments and use them commercially prior to the time he sold the patent to you?

A. He bought them from us.

Q. He bought them from you, but he did not manufacture any attachments himself prior to 1927 and put them in commercial use, did he?

A. No. He might have done a little experimental work on one or two attachments, but not many. So far as I know, the first attachment purporting to be under the patent in suit that was used commercially were attachments made and sold by us, beginning in 1927.

Q. You have referred to the Grosser license which has been put in evidence. Did you personally negotiate that license?

[fol. 175] A. Well, I had some talks with Mr. Nydecker and Mr. Winkler, and I think there were various visits, but I notice this one was signed by Mr. Jansen.

I was familiar with the Grosser license. I know that the Grosser license does not purport to be a complete license under the patent. The license is limited to certain parts of the patent. Likewise the license is limited to production of certain type of suture.

Q. A certain type of suture to which the licensee was limited under specified claims of the patent is illustrated by exhibits attached to the license agreement, is it not?

A. To the technical part of it——

Q. I just asked for the fact; that is the fact, isn't it?

A. The reason for this was——

Q. I have not asked for the reason, Mr. Thun, I am just asking for the fact.

A. The reason will explain the fact. We had agreed with Schletter that he should exploit the construction of the patent and this came under that heading and we wanted to reserve that for him and not give out a general license.

Q. Now, will you answer my previous question?

Mr. Darby: Will you read the question?

Q. (Read.)

A. Evidently Mr. Nydecker was perfectly satisfied with this license.

By the Court:

Q. There is just one specific question, Mr. Witness. Can't you answer that?

The Court: Read the question again.

[fol. 176] Q. (Reread.)

A. Yes.

Q. Likewise the license agreement illustrates by a sample attached thereto a type of suture with the licensee did not acquire the right to make, is that correct?

A. I think so, yes.

Q. Are you familiar with the type of suture of those fabrics?

A. No.

Q. You are not?

A. I don't go into the details of that.

I have also referred to some recently-granted licenses to users of machines of attachments supplied by the defendant. We have not granted licenses to hosiery mills who used attachments supplied by the Hofmann Company. The users to whom we granted this license, we first threatened with patent infringement suits, because they were using attachments supplied by the defendant in this case and because they were in the district in which we had obtained the sustaining verdict.

Q. You threatened them with suit if they did not settle with you, didn't you? A. We did not threaten them very severely.

Q. But you did threaten them?

A. We are on very good terms with them.

Q. But you did tell them that you would see them if they did not settle with you, whether you did it severely or not?

A. I don't know whether that is in the letter or not. That was handled between Mr. Howson and the other parties. They were notified by our company or in behalf of our company before a settlement was effected.

Q. You referred to the defendant company as being an importer of German-made knitting machines. You know, do you not, that the attachments sold by the defendant for [fol. 177] its knitting machines are made in the United States?

A. I did not know that, but I knew that Mr. Hirsch had a connection with the Lieberknecht concern in Reading, and

that they were making certain parts of the knitting machines there, possibly also these attachments.

I have given the price at which we sold our attachments. I don't know whether that price includes the variable rocker attachment. I testified that the original patent application of Mr. Schletter was prepared by Mr. Stewart, in Reading, who was then our patent attorney. I presume that we paid the costs for the preparation of the patent application, but I am not sure.

Our negotiations with Mr. Schletter were not at any time abandoned between 1921 or 1927. We worked with him all the time.

I know that the patent application that was filed by Mr. Stewart was rejected by the Patent Office.

Q. And that the application was abandoned; do you know that?

A. It was revived, was it not, by Mr. Schletter?

Q. Do you know that it was abandoned?

A. I know that he was dissatisfied with Mr. Stewart.

Q. Can you answer my question: Do you know whether it was abandoned?

A. Well, that is a technical question.

Mr. Howson: I object, if the Court please. That is not the purpose that this witness was called for. It is a matter of record, and if you intend to prove that, I submit this is not the proper time.

The Court: The objection is sustained; not proper cross examination.

[fol. 178] Mr. Darby: If your Honor please, may I say this, to get an answer to this question—I don't want to make myself obnoxious in resisting your Honor's ruling, but this witness stated that he paid $20,000 for the application pending between 1921 and 1927. He said that his application for patent was filed, and we will attempt to prove, and I think will be able to prove, that this whole subject matter was resuscitated about 1927 after it had been lying dormant all that time. The application was abandoned, and I think it is pertinent, in view of the very purpose for which this witness' testimony has been submitted, to establish this fact, and I believe it to be the fact that the plaintiff knew that the patent had been rejected by the Patent Office and knew that it was abandoned.

The Court: What he got was a patent, and that was not abandoned, and that is what he paid his $20,000 for.

Mr. Darby: That is true, but your Honor——

The Court: Objection sustained.

Mr. Darby: What they are trying to do is to carry it back to 1921. May I note an exception.

The Court: Certainly. There is no evidence from this witness to that effect. There isn't any evidence in this testimony that would support that statement.

Mr. Darby: Very well, your Honor. I certainly understood this witness to say that Schletter brought him this in 1921.

The Court: His testimony, of course, speaks for itself, [fol. 179] but certainly as I understood his testimony, there was nothing to show that it was brought to him in 1921 and then abandoned.

Q. Do you know what make of attachments are in use by Rosedale and Chipman with whom you are negotiating and have arrived at a license arrangement?

A. I have not seen their machines nor their attachments, but from the fact that they are willing to acknowledge the validity of the patent and take out a license——

Q. No, I simply asked you what make of attachments they are using.

The Court: He said he doesn't know.

The Witness: Lieberknecht, it must be.

The Court: That is a conclusion. I understood you to say you had not seen the machines.

The Witness: No, I have not seen the machines.

The Court: Then, that answers the question.

Mr. Darby: That is all.

George W. Goetsch, called as a witness on behalf of the plaintiff, being duly sworn, testified as follows:

Direct examination.

By Mr. Howson:

The Witness: My age is fifty-two years old; residence, 8200 Manor Road, Elkins Park, Pennsylvania. I am superintendent of the Quaker Hosiery Company. The Quaker

[fol. 180] Hosiery Company is located at 22nd and Lehigh, Philadelphia. That company manufactures ladies' full-fashioned hosiery. I have been connected with the company sixteen years. The company operates 210 machines. It manufactures about two thousand dozen pairs of stockings a day. I was connected with the full-fashioned machine industry prior to my first connection with the Quaker Hosiery Company. My connection with the industry covers about 39 years. We use full-fashioned knitting machines manufactured by Textile Machine Works and also foreign makes. The names of the foreign makes are Karl Lieberknecht, Theodore Lieberknecht, and Hofmann. The Karl Lieberknecht machines are those sold by Louis Hirsch Machine Company, the defendant in this case.

Evidence has been given in the case that the Textile Machine Works have placed upon the market, beginning sometime in 1927 the so-called reinforced selvage or shadow clock attachment with a reverse motion as illustrated on page 3 of Plaintiff's Exhibit 32; I am familiar with that attachment but I don't see the reverse motion on this drawing. In our plant, we have utilized these attachments.

We have used the reverse motion since November, 1927. As to what extent we have purchased and installed such attachments I will say that from Textile Machine Works we bought all but about 19 machines.

We have found the attachments successful and satisfactory. We have used them for pointex heels, or rather one was pointex heels, French heels, fancy design heels; on the footer we used them for cradle-foot cotton sole with silk instep.

[fol. 181] I am asked to state what I think with reference to the value of the attachment as an addition to the full-fashioned knitting machine. I will say that I think today it is indispensable. You must have it with the style that is in vogue today. I believe it is a fact that styles have been created by the use of the attachment. I have used the attachment for doing split seam work at an angle to the wales? *A.* By split seam, I mean closed split. The stocking which is handed me is a stocking such as produced by me by the use of the attachment. That is cotton and silk overlapping with closed splits. This stocking happens to be two needles overlap.

I have also utilized that attachment for making four needle overlap. We make them both ways. That is four needle, yes. You see your difference in the width there.

Mr. Howson: The stocking identified by the witness as a four needle overlap split is offered in evidence as Plaintiff's Exhibit 38.

(Marked Plaintiff's Exhibit 38.)

The Witness: That four needle overlap, closed split formed by the attachment, is satisfactory. We are still making use of it today. The stockings are being sold today.

I am familiar with an attachment which has been in use for many years in connection with full fashioned knitting machines known as a split sole or split foot attachment. Such an attachment is referred to on page 54 of Plaintiff's Exhibit 6 which is shown to me. That was in vogue when we just made the straight split; either crowfoot or closed split. [fol. 182] That attachment was provided with raising and lowering under-cut stops. A push and drop cam; up and down. First to my knowledge years back, I would say probably thirty years ago, it was used mostly then when we made black cotton stockings with wide soles and that was all made in crowfoot split because it was more ornamental. Later when the silk hosiery came into vogue gradually we threw it over into a closed split which was made with the same attachment just by simply not leaving it rock up and down.

The attachment was provided with means for either permitting it to rock up and down or preventing it from rocking up and down. Two levers on that would give you both ways. The first device that was similar to that was on a German machine; that was a Schubert & Selzer machine. I would say I have been familiar with it about thirty years. About the time we were using the attachment for making the open split work it was made in quite large quantities.

I am not connected in any way with either of the parties to this case. They are both friends of mine. I have no interest in the controversy.

Mr. Howson: That is all.

Cross-examination.

By Mr. Darby:

Q. Mr. Goetsch, I understood you to say that in your opinion this attachment created styles. What styles did you have in mind when you made that statement?

A. It actually created a sandal foot I would say, more so—it had also created fancy heels but they were very short lived on the market. The sandal foot, is a form of cradle foot.

We had not made cradle feet before we acquired the attach-[fol. 183] ment from the Textile Company. I do not know whether the cradle feet had been on the market before 1927.

We made pointed heels, starting about June, 1927. That was before we had the reverse motion attachment. As to whether that was a drum or a spindle device that we made pointed heels with I will say that we bought the first one from the Textile Machine Works without the reverse motion to make pointed heels with. We did not have any drum type in our plant at that time. We have acquired some drum types since 1927. We put the drum type on the Schubert & Selzer machines that we had because that was their machine and I favored to let every machine manufacturer put his own type of attachment on.

A drum type can make the same designs, cradle foot, sandal foot and reversed heels as the reverse spindle can, depending, of course, upon the pins of the drum. But it is not quite as practical to my mind and therefore I prefer the spindle type. It is possible that it can make everything the spindle type can make, but it is more awkward.

Q. You do not use the reverse motion on your leggers of your commercial stockings, do you?

A. It is not necessary to use it in the fabric of the stockings but is an advantage by allowing it to still operate; put enough buttons on there so it is necessary to start the next set, and the knitter does not have to rack it back by hand. The attachment is supplied with the hand rack to rack it back if he wants to. If you do not rack it back by hand, that is, if you rack it back automatically by machine, you have to keep the machine in operation a sufficient length of time [fol. 184] until it is all the way back before you start making another stocking. That would happen doing the next following set after the one you take off. I would not say

that that is a waste of power. You are manufacturing while it is operating. You are making another set of stockings. You are starting the welt on another run.

The attachments that we got from Textile beginning in 1927, the so-called Schletter attachments, did not have undercut stops to make the two needle curve. That did not come out until later.

Q. And they were not tilted with each course. They were stationary stops. That is, they did not rock with each course?

A. No. Not the first ones.

Q. I am afraid I made the answer unintelligible by my poorly formed question. They were stationary stops, so far as tilting is concerned?

A. Yes.

We have not made shadow clocks with this attachment—commercially. We have never made split clocks. I have never heard of them commercially.

I referred to what I call a crowfoot. That is the open two needle stitch. I believe that is what some gentlemen called it here. But naturally it is closed. It is sort of a herringbone effect.

As to why we dropped the herringbone, two needle, when we came to manufacture silk stockings I will say that with the herringbone we would have more seconds. The reason was as follows:

As the carrier has to shog over in a specified time. If a friction box was a little loose and did not get over in time, [fol. 185] that would drop there and you would have a hole there instead of being closed and therefore as machines gradually speeded up that idea was naturally dropped and we made the closed split due to the fact that we ran the machines fast.

Q. In point of time of production which type of stocking did you first put out? The two needle lap foot which you referred to in your direct examination or the four needle lap foot which is in evidence as Plaintiff's Exhibit 38?

A. The four needle lap was the first put out.

Q. When did you adopt the two needle lap in the foot?

A. After Textile Machine Works brought out an improvement to make a two needle lap. Naturally we thought probably the demand may be created on the market and we bought some. Then we found out as our orders increased

that we did not have enough of those machines—this attachment.

Q. To make the two needle lap?

A. No. And we started to make the four and we mixed them all up and we found out no buyer ever objected or ever bothered, so we stopped buying the two needle lap and make them both ways today.

Q. I want to know when the Textile made available to you attachments capable of making the two needle lap?

A. I am sorry. I do not just have the figures. It probably must have been about a year or so after we had the others in there.

Q. About 1930 or 1931?

A. I believe in around there somewhere, yes.

Q. But the attachments you first acquired from Textile could not make the two needle lap, is that right?

A. It could make them, but it would not make them right [fol. 186] because you would have a hole in the corner. That is, if it made the two needle lap you would have a little pin hole here in the corner (indicating on exhibit). Therefore even now with your two needle why this first carrier is actually going in four needles.

Q. In other words, it could make a two needle lap of the herringbone type that we referred to?

A. Only straight. Not curved. It could not make a curved two needle lap. The later attachment that we acquired from Textile, around 1930 or '31 or thereabouts, could make a curved two needle lap, closed.

Mr. Darby: I ask to have the two needle lap structure referred to by the witness marked for identification.

(Marked Defendant's Exhibit G for Identification.)

Q. I am now reading from an advertisement which has been identified as an advertisement of the Textile Machine Works. It is marked Defendant's Exhibit C for identification and contains this statement——

Mr. Howson: I object to any reference to that or any statement in it, Mr. Darby, because it is absolutely foreign to anything that I asked Mr. Goetsch, it seems to me.

Mr. Darby: Might I put the question and then you put the objection.

Q. The statement was made, "Full-fashioned knitting machine equipped with the Reading 3-carrier alternating attachment and intended for making a cotton sole and cotton cradle foot can now be provided with the Reading [fol. 187] 2-needle closed split attachment. This device (Patent applied for) eliminates the 4-need' overlap which causes a bulky line where sole and instep are joined. Write for particulars."

My question is, have you in your commercial practice found a four-needle overlap to cause in sheer silk hosiery a bulky line where sole and instep are joined which is objectionable?

A. May I answer you this way: I have not found it, because in real sheer silk hosiery you naturally would not put a cotton sole in.

Q. Have you manufactured stockings with cotton soles?

A. Yes.

Q. In the manufacture of stockings with cotton soles have you found a four-needle overlap where sole and instep are joined to cause a bulky line which is objectionable?

A. We have not, no, sir.

Mr. Darby: That is all.

(Witness excused.)

STIPULATION AS TO TESTIMONY OF PAUL KROENER

Mr. Shaw: Mr. Darby and I have a stipulation with regard to the witness we examined yesterday. It is stipulated by and between counsel that if Paul Kroener were recalled as a witness on behalf of the plaintiff he would testify that of the 142 sales of the attachment during the month of May, 1929, 94 of these were made prior to May 21st.

I offer in evidence the Schletter Patent 1,531,349, referred to by Mr. Meyer during his examination, as Plaintiff's Exhibit 39.

(Marked Plaintiff's Exhibit 39.)

Mr. Howson: Plaintiff rests.

[fol. 188] Defendant's Proofs

MAX C. MILLER, called as a witness on behalf of the defendant, being first duly sworn, testified as follows:

Direct examination.

By Mr. Darby:

The Witness: I reside at Cumberland, Rhode Island. I am an inventor and expert in knitting. I have been associated with the knitting industry over 25 years. I am a civil and mechanical engineer. My education was in Russia. I attended school in Germany. I have had connection with the knitting industry in the United States since 1910. I have been connected with Scott & Williams. I was employed by Scott & Williams then at Philadelphia, in 1910-1911 as designer of circular knitting machines and in the same capacity with the Acme Knitting Machine Company of Franklin, New Hampshire, during 1911.

From 1912 to 1920 I was employed in the same capacity by the Jenks Knitting Machine Company of Pawtucket, Rhode Island, designing and inventing for them a number of knitting machines, both straight and circular and there had been granted to me some twenty patents covering this work. I have since worked independently of others as an expert on knitting machines of all types. My place of business between 1920 and 1923 was at Pawtucket, Rhode Island.

In 1924 I built my present experimental laboratory in Cumberland, Rhode Island, where I have designed and built various types of knitting appliances and knitting machinery. [fol. 189] During the years between 1910 and 1935 I had a number of times been retained as knitting expert by some of the leading attorneys as well as by a number of the leading hosiery manufacturers, and have been employed and have built or invented various types of knitting machines and appliances for a great number of corporations.

For some time I have built full-fashioned knitting machinery for the Hosiery Machine Corporation, and circular machines for the Miller Circular Machine Patents Corporation. I have had over sixty patents issued to me here and abroad, including circular and straight machines, with many applications at the present time pending.

For the last twelve years I have been writing articles for trade papers on the knitting art, fabrics and machinery, most particularly for the Textile World Journal. My book "Principles of Knitting" was published in 1931, by the McGraw-Hill Book Company of New York and my second book on "Knitting," the major portion of which has appeared in the form of articles in the Textile World is now being prepared for publication by the same company. This book will completely describe the design and operation of the Cotton-type full-fashioned hosiery machine. I also wrote the Knitting Machine section of the Commonwealth Industrial Encyclopoedia, published by P. F. Collier & Son Company.

There are, broadly speaking, two distinct types of straight or flat knitting machines. The term "straight" and "flat" is used synonymously. It means either a machine having a [fol. 190] single set of needles or a machine having two sets of needles—that is, two beds of needles. The modern type of single bed machine sometimes called flat and sometimes straight is a development of the Cotton principle and invented in 1864; the other type I mentioned, the two bed type, was invented by a man named Lamb, an Englishman, Reverend Lamb, and he used the two beds of needles so that he could either produce straight flat pieces of fabric somewhat similar to Cotton or he could make a tubular fabric. Both types of machines fashioned and both types can fashion, by lifting loops off of certain of the needles and depositing them on other needles, and for this purpose they are equipped with narrowing points or some form of narrowing implement for lifting loops off of certain of the needles and depositing them on other needles. Both machines can do that. The characteristic of the Cotton type of machine is the fact that it is now built in many sections. The machines are very long, all of the operating parts being driven and operated by a single camshaft running throughout the length of the machine. Continuing the comparison between the two major types of machine, the Lamb machine is also built with a similar cam shaft. The Cotton machine is fitted with carriers that lay the yarn to the end of the implements and those bars extend throughout the machine, there being quite a number of them. Similar bars are used in multiple section on the Lamb machine. In the Cotton machine there are stops that limit the traverse of these carrier bars so that you can get long and short strokes and a very

[fol. 191] similar system is used in multiple section on the Lamb machines.

When I say long and short strokes, I mean strokes that go from selvage to selvage as well as strokes that go less than from selvage to selvage. There are really three types of carrier strokes. One I would call the selvage to selvage carrier. That is the carrier that traverses the yarn across the needle bed, depending entirely upon this stroke as to how wide the fabric would be,—that would depend on how wide you want to make them. That is the selvage to selvage carrier. Then you have short stroke selvage carriers. By that term I mean carriers that move inwardly from the selvage any desired distance. They may move from one selvage; they may move from both selvages, and their length can be varied. Then there is a third type which is a short stroke inset carrier. That carrier can traverse the yarn for a short stroke in the middle of the bed, not from the selvage. Of course it follows that you can use these carriers in combination. For instance, you can use the short stroke selvage carriers in combination with inset carriers and between the three carriers produce a piece of fabric as desired or you can use a long stroke carrier and short stroke selvage carrier to produce spliced work in which case the center portion is relatively thin as compared to the selvage portion.

To make it clear, I have a drawing which will illustrate this. In view 1 it shows a long bar with a multiplicity of carrier tubes fastened to it, there being one carrier for each section of needles. That type of bar can be traversed for [fol. 192] either the total width of the needle from selvage to selvage or for shorter strokes, or from selvage to selvage nevertheless. The next type is shown in view 2. In that view we still have the long stroke selvage carrier, that makes the stroke across the entire set of needles or that number of needles that are active at the time, and in addition there are two carriers that make a short stroke as shown by the dark line which is intended to represent the fabric. In this view 2 the bars are lettered A, B, C; A is the long stroke selvage carrier; B is the left hand side short stroke carrier, while C is the right hand side short stroke selvage carrier. The question as to whether the carriers are to be used as a selvage carrier or whether they are to be used as a short stroke carrier depends entirely upon the type of the so-called abutments with which it is fitted. These abutments are shown in view 2. As an example, at B^1 and C^1. Carriers

are also shown in this view with abutments at the end—A on the left hand end and A-C on the right hand—the A with the A carrier, of course, gives it as a full stroke, has an abutment in two places at both ends. It has long been the practice in the use of full-fashioned machines to arrange abutments anywhere on the carriers—that is anywhere you want to have them, on the long stroke or short stroke, depending on the mechanism, to stop the mechanism. Those are called carrier stops and they have been used in about every conceivable position along the machines. The most common form of stop is what is known as the end stop. They are shown in view 1 in the same drawing, which clearly shows that the selvage carrier A has been stopped in its traverse [fol. 193] at the left hand end of the machine against the left hand stop, and on its next movement it will abut at the stop provided similarly to the left, but on the right side of the machine.

In view 2 is shown one method of stopping short stroke carriers. That particular form is located about centrally of the length of the machine and the stop is numbered D. The outer stroke of this third selvage stroke carrier abuts on the same end stop that was described in view 1. Those carriers being compressed with the proper abutments, as for instance the left hand short stroke selvage carrier C being provided with an abutment C on this right hand end so that it may on its stroke on the right abut against the right hand end stop. The left hand short stroke selvage carrier B is at the left hand end, so moving from right to left it abuts at the end stop. The short stroke carriers are further fitted with abutments B^1 and C^1 respectively for the B and C short stroke carriers and these abutments strike against a stop designated by the letter D in view 2. So that the right hand short stroke selvage carrier will on the movement from right to left abut against the right hand side of the center carrier stop C. The left hand short stroke carrier, that is, the B carrier, will abut against the same stop on its left hand side when it is the stroke from left to right. It will readily be seen that by positioning the stops B^1 and C^1 on any particular carrier, and arranging the position or location of the abutments properly that any desired short stroke can be produced.

I have so far mentioned the end stops as being used to arrest the traverse of the long stroke carrier on the end of the [fol. 194] machine, being any carrier of the selvage. In

view 3 of the same drawing an arrangement is shown which is in common use and has been for many years on full fashioned machines for arresting the traverse of the selvage to selvage long stroke carrier on a device like that about central of the machine, left. That is shown in view 3. The same result is achieved with these central stops as was achieved with the end stops. The A carrier as shown in view 3 merely being provided with the proper abutments, A^1.

Q. Let me crystallize that, Mr. Miller. As I understand you it was customary to control the travel of the carrier by spindles at opposite ends of the machine as shown in illustration No. 2?

A. Yes. The spindles are reversely-threaded with respect to each other. It was likewise customary to accomplish the same result with a single spindle located at the approximate center of the machine, the respective ends of the single spindle being reversely-threaded.

View 4 shows the centrally located carrier stops and in conjunction with those stops there is provided a stop D, very similar to the one described in view 2, for arresting short stroke carriers in their movement from the selvage inwardly. This stop D being exactly like the one described in view 2, I will not again describe it in detail.

I think I will just finish with 5 and 6. This drawing also shows common forms of end spindles in duplicate. Machines have been built in which spindles like the end spindles shown in view 1, have been put in duplicate for controlling long stroke selvage carriers against one of the sets of stops, [fol. 195] and the short stroke carriers against the other set of stops. Views 5 and 6 show the proper abutments for achieving this end. In order that the stops described may be altered in their position so that carriers can have a longer or shorter stroke, it is customary to have the stops mounted on screws or what I will call spindles, so that by rotating the spindles the stops against which the carrier abutments strike may be positioned where desired or they may be moved step by step. In order to achieve this step by step movement these spindles are usually fitted with ratchets which are diagrammatically shown in these views. The spindles and ratchets shown in Views 1, 2, 3 and 4 are of the single type. By that I mean just one ratchet is provided with teeth so cut at its periphery that its spindles can be operated step by step in one direction.

In View 5 the nuts or stops Z can be moved backward and forward step by step for the reason that their spindles are fitted with two ratchets, the teeth in the periphery of the ratchets being so cut that the spindle can be turned and racked backward and forward.

The arrangement shown in Views 1, 2, 3 and 4. Therefore these spindles with a single ratchet can therefore step the stops only in one direction. When I say "step the stops," I mean move the stops each rotation of the spindle. Move the stops step by step in one direction. This direction may be either in or out but is usually inward as the machines on which these spindles are used usually commence knitting on a greater number of needles and reduce the number of needles in action as the knitting progresses [fol. 196] so that the direction of racking is so that the carriers make shorter strokes automatically as the ratchets are moved.

The arrangement in View 5, however, for the spindles Z due to having two ratchets with opposed teeth can cause the carriers to shorten or lengthen their stroke.

Q. In these old flat straight knitting machines were they confined to the production of hosiery or did they make other articles?

A. Flat machines have been used to make all kinds of garments, as, for instance, underwear, sweaters, scarfs, gloves.

Q. Is the same machine used in each instance?

A. Oh, yes, exactly the same machine used but the machines have usually been used for making garments that require shaping. In other words, if you wanted to knit a straight piece of cloth that probably would not use a full-fashioned machine. You would use some other cheaper type of machine. He would not use a machine with this device to shape. A garment that is fashioned is usually more costly than one that is not, so it allows the manufacturer to use the more expensive machines.

Mr. Darby: May I interrupt long enough to offer this drawing in evidence.

(Marked Defendant's Exhibit H.)

The Witness: In the manufacture of a full fashioned stocking it is customary to start the fabrication at the widest part, at the welt and end with the narrowest portion,

at the heel. That is usually true although stockings are made on full-fashioned machines, particularly abroad—I [fol. 197] don't know of any having been made in this country—that are widened instead of narrowed. That is more usually done for garments other than hosiery. For instance a piece of goods that was going to be used for an undershirt might require both narrowing and widening.

It was customary in these very early machines to provide means to turn the spindle in both directions for that purpose. I want to say here that what I was saying about spindles and stops for carriers can just as well be said for spindles for controlling the narrowing. In other words, whether a spindle is used for the purpose of narrowing, that is bringing in the loops; that is shifting the loops, or whether the spindle is used to arrest the motion of carriers as far as the spindle and the racking means and the nuts and things of that kind are concerned, they are alike. There is not any difference.

Q. Is the movement imparted to the spindle for narrowing or for shortening the traverse of the thread carriers effected manually or automatically by the machine in these earlier or old machines?

A. It has been automatic. That racking has been done automatically, oh, certainly forty or more years; yes, more than forty years.

In fabricating a stocking in accordance with the practice in the United States automatic operation of the spindle is not required in more than one direction. Not for the narrowing part of the work. By "narrowing" I mean—you understand the carriers also narrow just as well as the points. When I say narrowing let it be understood I mean loop-lifting. The absence of shifting the loops. You could shape without lifting the loops. You could say a [fol. 198] carrier was narrowing if it shortened its stroke. So when I say narrowing I mean loop-lifting operation.

In fabricating a garment such as an undershirt, they quite often started at the widest part, as in the stocking, at the shoulders. Quite often they start with the wide part and narrow down and widen out again. The widening operation is effected by turning the spindle automatically, and for that purpose then they use two ratchets. They have to use opposed teethed ratchets so the spindles can be turned selectively either backward or forward. Of course the

carriers that work with those narrowing points have to be stopped in the same way. In other words, in addition to controlling the lifting of loops you have to also control the thread-carriers. In fact you can narrow without loop-lifting. You can shape without the narrowing tackle, but you can not shape without the carrier stop mechanism. Of course there is another thing there I would like to say and that is, in making underwear and other garments, particularly underwear, I have in mind there are many times where short pieces of fabric are knitted in between long pieces of fabric. For instance, you take a knitted portion of certain types of underwear, for the breast portion or hosiery, they are made in a separate portion when the long stroke carrier stops and another carrier makes the short piece that goes across the breast, so that you have in full-fashioned machines making that kind of underwear, you have short stroke carriers that are if you will—that do not go to the selvages. In other words, they are very similar, if it was not for that particular garment, to what we would call inserts. In other words, they are short [fol. 199] stroke carriers that do not go to the selvages. That is common in underwear made on the full-fashioned machines.

Q. What controls the automatic operation on these very early machines? Do they use a chain for that purpose, pattern chains?

A. Oh, yes. Chains are very old.

I am personally familiar with one of these old Lamb type of machines for making full-fashioned fabrics. I have a photograph showing such a machine here that has been in this country since 1914.

Q. To your own knowledge that has been here that long?

A. Well, the man told me who bought it. I believe it was built in 1912.

Mr. Howson: Mr. Darby, is that something set up in your answer?

Mr. Darby: No. This is something purely historical.

Mr. Howson: That is not an anticipation?

Mr. Darby: Oh, no. That is historical.

Mr. Howson: Mr. Darby, just to make myself clear, this not having been pleaded, I understand does not go to the question of the validity of the patent.

Mr. Darby: It merely shows what was commonly used.

It is not pleaded and not used as an anticipation. It is historical.

Mr. Howson: But that does not quite meet the point.

Mr. Darby: I am certainly going to refer to it as showing what was employed in the Lamb type of machine.

[fol. 200] Mr. Howson: Now, if the Court please. I don't know whether there is a question pending, but I might make my position plain. I understand the law to be that as to patents, publications, prior machines, such as this purports to be, which are to be used by the defense in attacking the validity of the patent, that I am entitled to notice in the answer; that if they are not pleaded they may be used to show the state of the art but solely on the question of interpretation of the patent.

Mr. Darby: That is all I understand and use it for. It may be shown to establish the state of the art, but it is not limited solely to the purpose of interpretation. It can be used as the state of the art to limit the invention. Now if we mean the same thing by our two expressions, we are in accord.

The Court: At least the evidence is admissible under the general statement as has been made by many of the courts to show the prior state of the art.

Mr. Howson: Yes.

The Court: The further effect of it is a matter on which you gentlemen may or may not agree. I do not know. But it makes it competent. It can not be received for the purpose of building up anticipatory evidence to establish invalidity, not having been pleaded. But it may be admitted for the purpose of disclosing to the Court the state of the prior art; that might limit, I suppose as Mr. Darby says, if that is the situation, the alleged invention. I don't know. I can see how it might be held that it could be used so.

[fol. 201] Mr. Howson: It is received for what it is worth and I have made my position clear.

The Court: And when you file your memorandum you may submit your authorities as to how far I may go in giving it consideration.

The Witness: Do you want me to describe this?

Mr. Darby: Yes, please.

The Court: Is this the one that you said you believed was built in 1912?

The Witness: Yes.

The Court: All right, go ahead.

The Witness: I do not know just when they were built, but this has been here since 1914.

The four photographs, numbered 1, 2, 3 and 4, show what is known as a Lamb machine. The Lamb machine is a flat or straight machine with two needle beds placed at an angle to each other so that the needles in each bed may cross each other when desired, although they may work independent beds, and when operating as independent beds they produce flat fabric, and when operated alternately as a two-bed machine thread may be fed down one of the beds and back down over the other bed, and therefore produce tubular fabrics. The two beds are clearly shown in photograph No. 2, the needles being also shown very clearly in this picture.

The carriers, of which there are a number, are shown at 1 in the various photographs, but very clearly in the Fig. 2. These carriers are traversed back and forth by suitable mechanism. That is most clearly shown in Fig. 3 in which [fol. 202] an arm hinged near the floor 3 is moved backward and forward by suitable link mechanisms.

In order that the carriers may be traversed a greater or lesser extent, there is provided at each end of the machines spindles 8 and nuts 7. This is most clearly shown in Fig. 1.

These spindles are fitted with ratchet mechanism in the form of pin discs, the pins being shown at 9 most clearly in Fig. 1, two pawls being provided, numbered 10 and 11, and one pawl working on one — the disc and the other pawl on the other side, the end of these pawls being so shaped that one of them may engage with the pins 9 to pull the disc in one direction, and the other one push against the pins 9 to turn the disc in the other direction, suitable gears being provided to in this manner rack, partially rotate the spindle 8 in either direction, so that the ends 7 can be moved in or out step by step.

A pattern chain 13 is shown in view 3 for controlling the time of operation of those pawls. The actual operating means provided for the pawls is the camshaft 12 which extends throughout the length of the machine. This is the camshaft on which all the cams of the machine are mounted to give the proper motion to the operating parts, and photograph 1 clearly shows the cams on the end of this shaft for causing the pawls to rack at suitable times. In other words, the shifting of the camshaft is what operates the pawls, the shifting either being in one direction or the other so that either one of the pawls can be active.

This machine is further provided with implements known [fol. 203] as narrowing points more clearly shown in Fig. 2 or photograph 2. These points are numbered 15, there being a group of them at each end of each needle section. These implements engage with the needles in such a manner as to lift off the loops and deposit them on adjoining needles. The particular machine shown is fitted with four sections.

Q. Did you ever see any of the machines with more or less than the number of sections than the machine shown in the photograph?

A. Well, I would not be sure. It seems to me I saw one in Germany of six sections, but I would not be sure.

Mr. Darby: I offer in evidence the photographs identified by the witness.

Mr. Howson: We object to the offer on the ground that they purport to illustrate the machine claimed to have been in prior use, and we have had no notice of any such prior use in the answer. We object to the offer for any use other than to show the state of the art as affecting the possible scope of the claims of the patent.

The Court: It may be received subject to that objection.

(Marked Defendant's Exhibit I.)

Mr. Darby: I now offer in evidence certified copy of the file wrapper of the patent in suit, and for the sake of convenience, if the Court please, I think it would be easier reading to use the printed copy in volume II of the record appearing at page 207.

(Marked Defendant's Exhibit J.)

[fol. 204] Mr. Darby: The patent in suit on its face purports to be a substitute for an abandoned application, serial No. 569,559 filed June 9, 1922. I offer in evidence a certified copy of the abandoned application referred to and for the reason stated will utilize the copy printed in Volume II of the record of the Hofman case beginning at page 449, et seq.

(Marked Defendant's Exhibit K.)

The Witness: I am familiar with the file history of the patent in suit and the abandoned application just referred to.

I will refer to the history of the abandoned application so as to develop the history of the patent in suit from the very

beginning and state what type of product is described by the abandoned application.

This application relates to a split-seam mechanism for full-fashioned machines to control the split-seam loop or adjacent yarn sections.

Q. What type of a suture is that?

A. What do you mean by "what type of a suture"?

Q. Is that the same as a spliced seam?

A. Oh, no; no.

Q. Is there anything contained in the specification that indicates that the production of any other type of suture than a split seam was contemplated?

A. No; I have not found anything.

Referring to a drawing forming part of that application beginning at page 471, the mechanism there illustrated would not produce any type of a suture other than a split seam.

In this drawing my attention is called to the pattern chain 70 in Fig. 1. There is not shown any mechanism for effecting the operation of the pattern chain 70.

[fol. 205] In Fig. 2 there is no mechanism shown there for effecting operation of the pattern chain 70. There would have to be provided mechanisms for actuating pattern chain 70 in order to make this device operate. There is not any mechanism for actuating the chain 70 disclosed in any of the other drawings of the application.

Q. I notice that the first Office action as it is found on page 463 requires, the Examiner says, to state "the means for actuating lever 71 should be shown and described." In your study of the file history of this case was that requirement complied with?

Mr. Howson: I object to that.

The Court: Yes. I should think that would be improper. Objection sustained.

Mr. Darby: I have no doubt the document speaks for itself, but I had hoped to get the statement in without the necessity of the Court's laboring in going through it, and I just call the Court's attention to the fact that——

The Court: There never seems to have been an amendment to that.

Mr. Darby: There never was any amendment. There was first action which was a rejection and the case was abandoned. I might state that at the time this applica-

tion was rejected the time within which an answer could have been filed was one year. That is at that time. Since then it has been changed to six months; so that an action should have been received, to avoid abandonment, by April-18, 1924. That is correct, isn't it, Mr. Howson?

[fol. 206] Mr. Howson: Yes.

The Witness: I will now refer to the application for the patent in suit beginning at page 207. I am referred to page 210 and to the last paragraph on that page, and asked whether that paragraph refers to a type of fabric other than split fabric. I will say no.

As to what I understand to be meant by the reference to "reinforcing thread," as contained in that paragraph, I will say that the term "reinforcing thread" when used with split seams means that one of the areas of the split portion is thicker than the adjoining area, and as I read the patent to be drawn for split fabrics, I naturally read the term in that way.

I am referred to the drawings of the application as filed, beginning at page 271, and my attention is called to Fig. 1 of the abandoned application, and I am asked whether I find any differences between those drawings, with the exception of the mechanism at the right of the figure consisting of two levers and a vertical rod, which are not designated by any reference character. I will say that in the abandoned case, there are no mechanisms shown for a ratchet chain, whereas in the file wrapper of the patent in suit, there is some form of mechanism shown. I can not make out, as one skilled in drawings, what that mechanism is.

I understand the necessity in a device like the patent in suit to remain stationary, inoperative, while narrowing is being effected. I agree that it is absolutely necessary to have the reversely-threaded spindle 11 of the patent in suit remain stationary while work is being effected. During [fol. 207] narrowing, the carriers do not move across; they are stationary. They do not feed on, so that the spindles if they were racked during work, the carriers would be shifted, so that in the next course or whatever course they were supposed to be shifted in, your pattern would be wrong, and you would destroy your pattern.

In the structure as shown in the patent in suit, in so far as it is described in the specifications of the patent in suit, the spindle 11 does not remain stationary during narrowing, it is racked during narrowing.

In the patent in suit if the shaft 5 is shifted to the right in the manner described, as necessary for successful operation, the spindles would be racked. As to what would happen to the various cams and rollers appearing on it, I would say that they would drop off the cams. I cannot see how it would be possible for the shaft 5 to be returned to its position under those conditions.

Mr. Darby: Now, if the Court please, for convenience I have marked up a copy of the patent in suit underlining in red the changes that have been made in the new application of the patent as issued, as compared to the application as it stood when it was abandoned. I submit this as a matter of convenience and I will offer copy of the patent in suit so marked.

(Marked Defendant's Exhibit L.)

Q. Will you please refer to Fig. 10——

The Court: Everything in red is supposed to be new?

[fol. 208] Mr. Darby: Yes, your Honor.

Mr. Howson: New, Mr. Darby, as compared with the abandoned application.

The Court: That is what I mean.

Mr. Darby: Yes.

Q. Will you refer to Fig. 10 of the patent in suit and state whether or not in your opinion the structure shown by the patent in suit,—the mechanical structure shown by the patent in suit—could make that design?

A. No. Because there is no means shown in the patent for changing over from split knitting to plain body knitting. I mean to knit, let us say, the first course below the lowest point of the design. At that point the carriers that had been knitting short strokes must commence knitting, or at least one of the carriers, must commence knitting across the width of the fabric.

I heard Mr. Meyer's explanation how that might be effected by leaving the splicing carrier idle in the middle of the frame and shutting down the machine and taking off the friction boxes. I do not agree with him as to that

possibility or the practicability of it. The reason for my disagreement is as follows:

You see, if that were done the carriers would be idle opposite the needles, not at the end. You have the idle carriers at the end of the machine. If you idle them in the middle of a section, it would be objectionable for many reasons. For instance, they might not stand where you think they would stand and that would mean the carrier 2 which projects below the top of certain of the sinkers would interfere with the correct operation of the sinkers. That is, the [fol. 209] carrier 2 would not stand where it ought to. It has to stand within a very restricted space. Further, the carrier in feeding the yarn, as more fabric is knitted, would of course recede away from the needles, so that yarn, as soon as one course was knitted, would be to the back of the needle, extend through the needles to the beard side, which would interfere with the proper operation of the following courses, because that yarn, getting entangled with the sinkers, might allow any number of needles, right and left—in fact, might injure the needles. I don't just remember whether Mr. Meyer said that you could cut those yarns off, It seems to me he said that you could idle them in the middle of the section by cutting the yarns off. If you did that, it would first of all be a long job. You would have to hold the machine up and if it is a 24-section machine, you have to get rid of two carriers; you would have to get rid of one of the side carriers or you might have to get rid of the selvage carrier or you might use the selvage carrier as a body carrier, so in the section you have to cut under. It is one thing to cut under at the end of a section but it is quite a different thing to cut it in the middle because that would mean you would have to rack your needle bed. In order to do that you would have to get hold of the yarn to cut through, and if you cut it off without getting hold of it it would injure the carrier. You would have to do that in 24 sections and two carriers and each section, and of course that is impossible or impractical unless it is a hand machine. If you operate a hand machine you could probably do that, but not with an automatic machine like these.

[fol. 210] Q. Could you do that with a machine used for manufacturing full-fashioned hosiery?

A. No one would would try to do that.

Q. Now, Mr. Miller, will you please refer to the defendant's machine. I think you have prepared drawings of the defendant's machine charged to be an infringement.

(I will tell the Court quite frankly that we went to the trouble of putting our drawings in the defendant's machine because of the difference we believe existed between them and the photographs which the plaintiffs have produced.)

We have provided enlargements of those drawings and I have placed on the opposite easel the plaintiff's exhibit 34. Using these drawings as numbered 1; 2 and 3 that you have prepared, will you please point out the differences between the defendant's machine as illustrated in your drawings and the defendant's attachment as illustrated in Plaintiff's Exhibit 34, so far as they are pertinent to this controversy.

A. The defendant's structure as I know it has the stop pin 7 arranged for automatic motion to and from the carrier and those stops are on the defendant's machine undercut, so by moving them up and down you get a longer stroke with the carrier when the stop pin is up and a shorter stroke when the stop pin is down, whereas in the drawing submitted by the plaintiff of the defendant's structure those pins 7 are apparently intended to be put into action and remain there.

Q. What difference practically does that make?

A. That would mean that Exhibit 34 could not make split fabric; that could only make spliced fabric.

[fol. 211] Q. Whereas the defendant's machine does make split fabric?

A. Oh, yes. It is designed to make split fabric and uses more of those pins 7; in Exhibit 34 there are only two of them shown.

Q. Where is that shown in your drawings?

A. Whereas in the drawings that I prepared, there are four pins shown; they are numbered in my drawing, 28, 29, 30 and 31. That is these four pins here (indicating), more clearly shown on this one, whereas here there are only two pins, and these pins are undercut; in other words, they are flattened whereas these pins are not flattened. That is as near as I can tell. You won't get much good out of them flattened, because they don't move.

Q. I call your attention to the fact that the undercut pins are shown in the patent in suit; are the undercut pins in the

defendant's structure of the same type and do they have the same purpose and do they operate in the same way?

A. No, they do not operate in the same way and they are not for the same purpose.

Q. Will you explain the difference?

A. In the patent in suit, the undercut stops provide a delayed extended action of the carrier. In other words, as the carrier first strikes the stop and rests there for a moment and then the stop pin is lifted presenting a flattened part to the carrier and if the stop moves further both pins in that case move together up and down. In the defendant's structure, while the pins are moved up and down, they are not so moved for the purpose of getting delayed lengthening of the carrier action. They are raised to present a surface and to give a longer carrier stroke, just about the time [fol. 212] the carrier starts the stroke, it never strikes the pin, then delays and goes further and all the pins, the four pins of defendant's structure do not move together for if the diagonal line is to be inclined in one direction, a pair of the pins are removed, and if it is to incline in the other direction, the other pair of pins are moved, but in no case is there a delayed lengthened action as in the plaintiff's.

Q. In the patent in suit, this delayed motion which comes by the undercut stop is for the purpose of floating the thread?

A. So I understand. There is no floated thread in the defendant's structure.

In the patent in suit, the undercut stops are tilted with each course. In the defendant's structure that is not true. As I said before, in the defendant's structure—let me say this first—in the defendant's structure, in place of having two stops undercut on both sides as in Schletter, so that when you move one stop you are really moving two undercut surfaces. When you move the two stops in Schletter you are moving four undercut surfaces at once; in the defendant's structure the undercut stops are in the form of four pins so that you can move certain of them without moving the others. The whole reason for this thing, for those undercut stops as the defendant uses them is to prevent the formation of holes when you produce bias split junctures. In making a split, you can make a lap wide enough for any hole that may be formed, but for many years the demand has been for narrow sutures, and in producing narrow sutures, if you use the Schletter structure, the Schletter

stop arrangement and the way he moves it, you form holes. [fol. 213] There are two things you can do, either widen the suture or you can use the narrow suture which the defendant does by changing the operation of those pins and the stroke of the pins entirely.

Q. Just one more question. In the defendant's structure do the stops lift at any time other than when racking occurs?

A. Only when racking occurs, and then not all four of them. Two of them are lifted when the racking occurs we will say inwardly, and the other two are lifted when the racking is outwardly.

Q. And in the structure of the patent in suit, when does the tilting occur with respect to the racking? Is it ever at the same time?

A. Will you repeat that?

Q. (Question read.)

A. Why, no, because there are no cams there. You see, that is a question of timing, but there aren't any cams shown in that. In none of those drawings are there any cams.

Q. In producing a split fabric, I mean with an undercut stop such as is employed by Schletter, does not the tilting of the stop always occur at the beginning of the course?

A. No, I would not say that. As I understand the type of suture that Schletter described, according to this description, is the type known as herringbone, that is, in which a thread is floated. Now, to make that kind of a suture, the undercut stops or the tilting as you call it, movement of the undercut stops or tilting must take place at the time the needles leave the nose of the sinkers, just prior to the knocking over. I have drawings to show that.

Q. When is that relative to the laying of the course, is [fol. 214] it the beginning, the middle of it, or the end of the laying of the course?

A. It is after the course has been laid, and before the next course is started.

Q. Have you pointed out all the differences that are pertinent to this litigation?

A. One thing I may not have made clear. The movement of the stops in the defendant's structure is not like that which I described at all, because in there we have a structure in which they are not making herringbone, because you could not make a herringbone with the defendant's structure.

Q. You could not make a herringbone suture with the de-

fendant's structure. Was the herringbone suture one that you understand the patent in suit is directed to make?

A. It is mentioned all through about floats; you do not make floats in a fabric of the defendant's structure. That is a characteristic of the herringbone suture.

Q. Will you please briefly designate the mechanism provided in the defendant's machine as you have illustrated it for effecting a lifting of the stops as you have described it?

A. That is best shown in the end view, sheet 1. The mechanism that lifts the pins 28, 29, 30 and 31, is tied in with the mechanism that racks the spindle. In other words, as the spindle is racked, certain of the pins are raised so that the undercut portions are in position to arrest the carrier in a position to the roller then it would stop if the pin had not been raised. I think I will have to describe this a little—no, I see that does not answer your question. You want to know how to raise the pins. There are two pawls for racking the spindle. There are two ratchets at the end of the spindle, ratchets having opposed teeth, and [fol. 215] the pawls being in position, one over and one under the center of the spindle, and the pawls being pivoted on a circular lever, so by a movement of the lever these pawls go to and from the spindle, either of the pawls, depending upon which one is in action against the other spindle. When the lower one is in action it throws the spindle in one direction; when the upper one is in action it throws the spindle in the other direction. Actually, as shown in this drawing, these pawls are numbered 34 and 35, in a clockwise racking, by that I mean turning the spindle as shown in this view in the direction as the clock moves it moves the stop nuts apart to widen the selvage. So when the pawl 35 turns the spindle clockwise the nuts 16a and 17a are moved apart. Now the mechanism that raises the proper pins so as to change the stroke of the carrier it is in the form of the part 22 which is more clearly shown in the upper left hand illustration. This piece 22, when the pawl 35 moves to rack—causes it to be slightly turned by pin 35a forming part of pawl 35 contacting with it, so that the upper end of the piece 22 acts on a small lever number 26 which rotates rod 24 and on this rod 24 there are a series of small levers 24a that have a small rod 24b, so designed in their ends so that as the cam 22 moves it raises the small rod 24b and wires fastened to the end that is of the stop

pins are rotated around this rod 25b, so as the rod is lifted the pins are lifted. So you see, by racking the spindle in one direction with the pawl 35, two stop pins are raised, so that the actual stroke can be changed over what it would have been if the pins had not been raised. The reverse takes place when the bottom pawl acts on the other two pins, the [fol. 216] whole effect being to prevent the formation of holes in making the narrow suture, when you have a line juncture or suture line formed to the angle of the wale, unless you use some such system as here in the defendant's structure.

Q. How many chains does the defendant's structure employ?

A. One chain.

Mr. Darby: I offer in evidence the photograph of the small drawings numbered 1, 2 and 3.

(Marked Defendant's Exhibit M.)

Q. Do the drawings that have been offered in evidence as Defendant's Exhibit M correspond to the disclosure of the defendant's machine in the photographs, Plaintiff's Exhibit 2, I think it is?

A. I didn't get that.

Q. (Question read.)

A. I have never seen the photographs.

(Photographs handed to witness.)

A. These photographs show the wires that lift the pins that I stated were missing in the plaintiff's drawing of the defendant's structure.

Q. That is Exhibit 34.

A. Yes. In these photographs the pins can be automatically moved up and down, because they have to be moved when you make the split fabric.

Q. Do they also show the actuating cams?

A. I can see one edge of that, the little lever 22 I see that I was talking about. Oh, yes, it is clear here—oh, yes, the actuating levers are there.

Mr. Darby: I offer in evidence a folder containing United States Prior Art Patents consisting of an index and the [fol. 217] patents numbered accordingly. They are thirteen in number and I ask that they be marked as one exhibit.

(Marked Defendant's Exhibit N.)

Mr. Darby: I am going to ask this witness about these patents and to take them up in turn and to point out the pertinent parts of them and explain their operation insofar as this litigation is concerned.

Q. Will you do that please, beginning with the second, number 1,180,568.

A. The patent states that the mechanisms shown are improvements in knitting frames. Now a "knitting frame" is the same thing as a knitting machine. Abroad this is quite often used. This is a German inventor and the term "frame" is often used, but it means knitting machine. It is also stated that it can be applied to any straight machine including full-fashioned hosiery machines.

The apparatus is for knit-ing hosiery patterns from reinforcing threads and splicing. In other words, patterns can be produced by superimposing on the body fabric loops fed by another carrier, the pattern being produced by having fewer or more loops so superimposed.

Q. Referring to the patterns that are illustrated in Figs. 1 and 2, if the device can make those pat-erns, can they make any desired pattern between the selvage edges?

A. Yes, the patterns shown in the figures you mention are clocks or inserts. In the one shown in Fig. 1 there are a pair of clocks that start—or rather end at the place where the heel of the stocking is formed. In Fig. 2 the pattern takes the form of what I would call an insert [fol. 218] centrally disposed with the fabric.

Q. Will you please briefly describe the operation of the device which enables the production of those inserts or the spliced patterns?

A. As is common in full-fashioned machines there are a multiplicity of carriers shown. These carriers are numbered 4 and 5 in Fig. 1 and are fastened to bars 2 and 3 respectively. These carrier bars abut or rather the driving mechanism for these carrier bars abut against stops numbered 16 and 17. Said stops can be shifted endwise so that they can arrest the carriers in different positions by reason of their being provided with rack-like teeth and the pinion 11. This pinion 11 is caused to be rotated step by step by ratchet wheels so that when the 16th stop is moved outwardly, the 17th stop is simultaneously moved in the other direction. In this way it would be possible to produce the central clock like pattern shown in the drawings.

Q. Now, will you take up Patent No. 2, 1,217,411, and state in what respect this is different from the disclosure of the first patent?

A. This second patent is similar insofar as the controlling mechanism for varyingly positioning the carrier stop is concerned.

By the Court:

Q. Using exactly the same means?

A. It is not quite the same means.

Q. For all substantial purposes, I mean.

A. Yes. The important difference is in the arrangement of the carrier bars and abutments so that instead of forming clocks or inserts, the carriers vary the length of [fol. 219] their stroke from the selvages inwardly. That is, these carriers are caused to lay courses of varying lengths from the selvages inwardly, whereas in the other case the carriers will vary the length of the courses without ever going to the selvages.

By Mr. Darby:

Q. Now will you refer to the third patent, the Chipman, 1,163,970, and describe the mechanism there insofar as we are concerned with it?

A. This patent would be of interest as there is therein shown on Fig. 1, sheet 1, a spindle having right and left hand threads for moving nuts simultaneously away from and toward each other. The end of this spindle is fitted with a multiplicity of ratchets, quite clearly shown in Fig. 2, said ratchets being racked by suitable pawls of which there are three or four, certain of them racking the spindle in one direction while others again rack the spindle in the other direction. The feature is quite clearly shown in Fig. 4.

Q. Let me ask you: You say that the spindle is provided with a multiplicity of ratchets with varying teeth?

A. No, not varying. I mean teeth opposed to each other. Some of the teeth are cut in one way and some in another so that pawls operating the spindles can be moved either backward or forward. They are provided with more than two ratchets.

Q. What is the object of having more than just the two ratchets?

A. Why, that works in with a very complicated pattern control mechanism that he has here. The additional ratchets are provided so that the spindle can be rotated to a greater extent.

[fol. 220] Q. In the Schletter patent in suit is the rotation of the spindle limited to the one-tooth arrangement?

A. Oh, yes. In Schletter you can move either forward or backwards but always the same distance.

Q. And with this attachment the spindle can be rotated greater or lesser depending on which of the ratchets is made operative at the time, is that right?

A. Well, I have not studied it with that particularly in mind. But all I was very careful about was to state it so that I said it had a multiplicity of ratchets having teeth that were cut opposed so that you can move the spindle backward and forward. I do believe, though, that there are five ratchets in there. Now there is a chain to control that, you know. That is, there is a chain here (indicating). There is a chain for controlling that and other automatic parts of the machine in Fig. 8. That is a pattern chain. That type is not used on the full-fashioned machine, but it effects the same result.

The spindle is provided in this Chipman structure for moving nuts backward and forward and thereby controls a number of needles that are made active or inactive. In other words, this structure is not employed to control carrier rods. The reason I refer to it is that it has a spindle threaded two ways which can be racked either backward or forward. There is one thing I want to call your attention to; the patents where you mention that it racks different distances, and that also racks the spindle backward to start the new stocking. I think that is the first place I have run into a statement like that on spindles. That is filed back in 1910.

Q. That is automatic racking back to start the operation again?

A. Yes.

[fol. 221] Q. Now will you please refer to the Gee patent 1,014,573.

A. The Gee patent shows a pair of carriers having cam-like or stoplike extensions so that the traverse can be so arrested as to cause them to produce the design shown in Figs. 1 and 3. That is the stroke of these carriers can be longer

or shorter. There is operating this a chain to enable the carrier stroke to be varied and as the attachment is stated to be applied to full-fashioned machines, I assume the chain would control the timing.

Q. I call your attention to the statement on page 1, line 106, to the effect that the increase, step by step, or "throw of the bars A and A^1 to gradually increase or widen the design of the stocking while ordinary knitting of the same is going on" does that mean to you that that is in addition to the ordinary——

A. Yes. That would infer that the designs shown are spliced designs because while ordinary knitting is going on means there is a body carrier in action and then these two other carriers in the alternative scheme shown in Fig. 3 which shows four carriers in action, make a certain kind of pattern, but in both cases they are spliced patterns. By "splicing" I mean the superimposing of one yarn over the other.

The operation of the controlled stops is indicated as being automatic from the machine in Fig. 2.

Q. Will you take up the next patent which is the Kilburn patent, 19,370 of 1858, and point out what is pertinent in this patent to our inquiry?

A. This is a very old patent and the drawings are rather sketchy, but it relates to varyingly traversing carriers, or [fol. 222] rather a carrier, because at that stage of the development of knitting machines it was quite unusual to have more than one carrier in action at a time, but in this patent there are spindles shown to arrest the stroke of the carrier varyingly so that it could make a longer or shorter stroke.

The spindles here are shown at L, Fig. 1.

The Court: L?

The Witness: Yes, there is an L. It is very hard to see. L in Fig. 1.

The Court: It has to be "L" by the process of elimination. He has all the other letters there.

The Witness: I was impressed with the statement in this patent, and I am quoting now where the inventor goes on to state:

"If on the other hand"—that is paragraph 2, page 4—"If on the other hand the lower screw spindle has at one end a right hand screw and the other end a left hand screw

which threads operate on a nut screwed to one of the bumpers, the widening would be effected at the opposite edges of the work equally in opposite directions by the turning of the one screw L. Narrowing of the work may be effected by turning screw in the reverse direction to that for widening."

In other words, it was recognized as early as that that a right and left hand screw—that is two-way threaded spindles—could by moving it backward and forward effect the widening and the narrowing, and while true in this [fol. 223] patent—that is particularly this is concerned with widening and narrowing at the selvage, the same idea used on a supplementary carrier could control a short course in the same way.

Q. Will you refer to the Landenburger patent 1,134,749?

A. This invention relates to producing designs in hosiery by the use of short course selvage carriers. Examples of the designs that — be produced with the attachment are shown in Figs. 8, 9, 10, 11, 13, and 14. In the specific application of the invention the carriers are short course selvage carriers capable of splicing shorter or longer courses. The machine to which the attachment is shown applied is quite obviously intended to be a Cotton type full-fashioned machine. There are four carriers shown in action as shown in Fig. 4. These four carrier bars are fitted with suitable abutments, 40a, 41a, 42a and 42c, Fig. 3, so that they may be engaged with by suitable driving means and that said driving means can be stopped in its traverse by coming in contact with pins rigidly fastened in drums as shown in Fig. 1, these pins being of different lengths so that the stroke of the carriers may be varied in accordance with design requirements. There are two of these drums shown which are sufficient to produce the designs or patterns shown in the figures.

I am familiar with the commercial utilization of the drum type of pattern control. The Landenburger structure to my knowledge has gone into extensive use. There was a number of years ago, back along about 1925, yes, up to 1928, I should say, that the Landenburger attachment was on a great number of machines. It was used for making heels called high spliced heels, known as pointex heels. An [fol. 224] example of that type of heel is shown very clearly in Fig. 10, although twin heels and other kinds of patterns

were produced. In other words, anything could be produced with those pins because you could lengthen them or shorten them and get any design you wanted. But full-fashioned hosiery, you know, has never been produced in any great quantity in extremely fancy goods. I do not know why—because you can make all kinds of designs, but they are seldom used.

So far as the designs are concerned, you could make any design with the Landenburger attachment that can be made with the attachment that the plaintiff company sells, assertedly under the patent in suit. I actually used one of them back in 1927, I guess it was, or 1928, and produced all kinds of splits which is not what Landenburger talks about. He talks about spliced designs, but I have produced all kinds of splits. With suture inclined to the wales. Inclined both ways. Because you see here it is just a question of a longer or shorter pin; whether you incline one way or the other.

Q. Please refer to Lieberknecht No. 981,663.

A. This invention relates to a carrier stop spindle mechanism. It shows a reversely-threaded spindle clearly in Fig. 3 at 25, each threaded portion being fitted to a nut, 23 and 24. A ratchet being provided to rotate the spindle. The right and left threaded form of solid spindle shown will, of course, move the nuts away from and toward each other as the spindle is turned. The nuts are fitted with suitable surfaces against which the carrier abutments, of which a [fol. 225] number are shown, may be abutted and so have their traverse arrested.

This rever-ely-threaded spindle is mounted. Somewhere along the middle of the machine; about in the center lengthwise of the machine. The reversely-threaded spindle is automatically operated in one direction under power and it is operated in the opposite direction by hand, although the mechanism for operating it is not shown in this particular patent. That is how it is described. In that respect it differs from the patent in suit—with the provisions of the additional mechanism for rotating it in the opposite direction.

Mr. Darby: If the Court will permit me to change my mind in reference to the Landenburger patent, I will ask the witness to produce the samples and state when he made them and where.

The Witness (producing samples): I don't remember the exact date. It is marked here "1928." This sample was knitted, called a panel stocking. It was not made in connection with this litigation, but it was made in connection with another litigation. Now the other sample was made at the same time, and that shows twin clocks; twin clocks made of split fabric, the body of the stocking being gray and the clock black.

A two needle lap type of suture was employed in one of these stockings. The panel stocking is four-needle. The panel type is four-needle and the twin split clock is a two-needle lap.

[fol. 226] Mr. Darby: I offer in evidence the panel type stocking made with the Landenburger attachment.

(Marked Defendant's Exhibit O.)

The Witness: You see in using pins to stop the carriers, you could make any width of laps, and you can step any amount you want. If your pin changes a quarter of an inch in length, you can make the stroke a quarter inch longer or shorter and, of course, that is a thing you can not do with the spindle, because you can only get one change of position and that change always has to be the same.

Mr. Darby: I offer in evidence the second stocking made with the Landenburger patent, the twin clock split type.

(Marked Defendant's Exhibit P.)

Q. Then will you go on to the next patent, the Mueller patent, 1,564,438?

Mr. Darby: I might state, if the Court please, that this patent is a complete anticipation.

A. This patent shows a right- and left-threaded spindle; most clearly in Fig. 2; and a pair of nuts 25 and 26, which, when the spindle is racked move toward and away from each other by reason of the fact that the spindle is fitted with two ratchets, 35 and 36 having opposed teeth. The patent further shows two pawls, most clearly in Fig. 3, with chain pattern means for selectively making active one or the other of the pawls at desirable times, and pattern chain being shown for this perhaps in Fig. 4.

[fol. 227] The fabric shown in Fig. 1 is in the form of a design fabric with diamond-shaped pattern. It is stated

in the patent that the pattern — produced by splicing. The particular pattern shown has an outline inclined in both direction- to the wales.

This device, which is named on its face an attachment, is used in connection with the straight knitting machine.

Q. And will you point out if there is shown where co-operating yarn guide carrier bars are employed?

A. There are three carriers shown most clearly in Fig. 1. They are numbered 7, 8 and 34. There are opposed stops for certain of the carrier bars which have a stroke and the full width of the fabric being knit. That is most clearly shown in Fig. 2, the stops being numbered 32 and 33.

There is also a reversely-threaded spindle for moving the stops. That is shown in Fig. 2. The spindle number is 24. The stops are moved towards and from each other to vary the stroke of the bars controlled. Two opposed tooth ratchets are provided with suitable pawls.

Q. Is the chain device that you have referred to as illustrated in Fig. 4, is that the main chain control of the knitting machine, or is that an auxiliary chain?

A. It does not say, but I would not think it was the main chain. It looks to me to be just a little supplemental chain that has been hung there for that purpose. By a main chain it would have to be wider and have more room for more buttons.

The Witness: I will next refer to the Osterich patent, 1,655,688.

This invention relates to the production of diagonal split [fol. 228] fabric and shows the formation of this type of fabric at the toe of full-fashioned hosiery as shown in Fig. 8, the idea being to bring an angular ending to the sole of the stocking where it joins the toe. This patent only relates to the fabric, which is old, in order to illustrate the action of the mechanism to which the subject matter is directed.

In this patent numbers of carriers are stopped with a pin drum similar to the Landenberger type previously described. With such a device as shown angular junctures inclined in either direction to the wales could be produced, the design depending upon the length of pins used in the drum shown in Fig. 10. Actually the patent is directed to a minor improvement to the type of pin used in the drum.

I will refer to Fig. 9 of that patent. I stated that Fig. 1

shows a split type of fabric. The fabric shown in Fig. 9 is what is known as spliced fabric; that is in which loops are super-imposed over the body fabric, there being no split juncture.

The fabric design in this figure shows the inclines of the spliced areas diverging and converging; that is, the splicing carrier stroke is shortened and lengthened in accordance with design requirements.

Referring to the next patent, Rowlett 500,953.

This invention relates to improvement in straight-knitting machines, and is specifically shown and applied to what is known as Lamb machine. While the main object of the invention is to automatically introduce fashioning without holes, it, in addition, shows carriers stopped by a pair of connected spindles automatically actuated backward or for- [fol. 229] ward by a number of ratchets and pawls,—a Jacquard being provided to dictate the time of operation. The spindle is most clearly shown in Fig. 2, half of which is shown on sheet 3 and the other on sheet 4. The multiple ratchets are shown in Fig. 2 of sheet 3, as are the pawl levers, the ratchet being numbered G-13 and G-14, having opposed teeth.

The multiplicity of pawl levers are lettered F. Those opposed toothed ratchets are more clearly shown in Fig. 5 at the left hand side of this figure, as are the opposed operating pawls.

The Jacquard on control previously mentioned is operated by the ratchet Lc in Fig. 5. Such forms of pattern control are common in the knitting art.

I will briefly describe what I mean by the Jacquard and how it differs from a chain. A Jacquard has greater design possibilities for the reason that jacquards can be very wide and have a great number of control possibilities by reason of the fact that instead of Bumps being provided as in pattern chains, the cards of the Jacquard are fitted with holes which determine whether a part is to operate or not.

The device shown in this patent shows a main carrier, a splicing carrier, with both threads feeding various distances. The type of carrier stops used in this machine is similar to the type shown in the British patent to Black, 13,905.

The type of stops used here are those commonly used in Paget machines, which type of machine is the predecessor

of the Cotton machine. This type of stop is shown in Fig. 3a. The idea is to have the plunger or part that traverses the carrier marked H in this figure lifted out of the driving dog, Gx by the cam G—it is either a double [fol. 230] prime or an eleven, I don't know which——

The Court: Top G.

A. (Continuing.) In this manner disconnecting the carrier traversing the mechanism from the driver Gx. As previously stated this is a common type of driver and carrier traversing stopping means, and was used prior to the evolution of the Cotton machine. It performs the same function as the fixed Cotton stop.

As to whether this spindle for controlling the splicing carrier is in addition to the narrowing equipment, I will say that in the particular form of Lamb machine shown in this patent it was not customary to have narrowing as these particular machines are not provided with loop lifting implements so that machines of this particular class shape the fabric by widening. This was accomplished by bringing more needles into action when required.

This is the type of machine which would start at the narrowest part of the fabric and build to the widest part.

The mechanism for effecting the splicing consisting of the spindle that I have described is apart from and in addition to the mechanism for controlling the width of the complete fabric. That is quite separate. The needles are controlled—that is the question as to how many needles go into action depends upon the jacquard device which, so far as the needle control operation is concerned, is most clearly shown in Fig. 3.

I will now take up the Sowter patent 478,527.

[fol. 231] This invention relates to improvements in fashioning apparatus for straight knitting machines, it being specifically shown as applied to Cotton type machines for making hose, socks, pants, vests, or similar articles, its purpose being stated on page 1, commencing with line 12 of the patent.

The drawings show spindles, narrowing and carrier stopping spindles, fitted with multiple ratchets as shown in Figs. 1 and 2, there being multiple pawls shown which can engage selectively with the ratchets the means for selectively controlling them, being the pentagon shaped cylinder

V shown in Fig. 2 which is fitted with a ratchet W which may be engaged by a pawl X, so that the high portion of the pentagon can hold out of action the particular pawl and the low portion permitting such pawl to become active. Both spindles shown are fitted with opposed tooth ratchets so that the nuts which they operate can be stepped in or out.

One of these spindles controls the thread carrier. The other spindle controls the narrowing points. Both of them are provided with ratchet mechanism for rotating them in either direction.

My attention is called to page 42 of plaintiff's 1920 catalogue, Plaintiff's Exhibit 6, and am asked in what respect the mechanism shown in this patent—that is, at page 42—and shown in the Sowter patent differs from the showing in plaintiff's catalogue in so far as effecting racking of the spindles at will in either direction is concerned. I will say that the mechanism referred to is fitted with opposed toothed ratchets and two operating pawls so that the spindle K can be racked in opposite directions.

[fol. 232] Another difference is that the pawls are somewhat differently mounted on their operating yoke or lever C and they are similar in this respect to the Sowter structure which, as an example, mounts both of the pawls on a single lever K shown in Fig. 3 and effects racking in opposed directions by having the both pawls in the form of push pawls, one acting on one side of the spindle and the other on the other side of the spindle, whereas in the structure to which you have referred me, the pawls, which, as near as I can make out by this drawing which is rather small, E and D are both mounted on one side of the spindle, one of them being a pull pawl and the other a push pawl, one acting on the down stroke of the lever C and the other on the up stroke.

The other difference in the structures is that the pawl controls means shown in Sowter to determine which pawl is to go into action is considerably different than the selective means shown in the structure to which you have referred me, said selective mechanism being tied in with other mechanism and so not permitting a free and independent pawl selection as in Sowter.

Mr. Meyer, the plaintiff's expert in discussing and describing the operation of the mechanism shown on page

42 of the catalogue of Exhibit 6, stressed the fact that the mechanism was absolutely limited in its operation to a two-needle advance with a one-needle return. That is not true of the mechanism shown in the Sowter patent.

Q. And when you say "free selections of the pawl actua-
[fol. 233] tion of the Sowter patent," will you please expand that thought briefly?

A. In the Sowter patent, as previously stated, the pentagon member V provided with a ratchet W and a pawl X to rack the ratchet permits a free selection of either the back or the front pawl depending upou whether the pentagon has been allowed to come to rest with its high side on the front or the back pawl.

Q. And does it also provide free selection of direction of rotation of each of the spindles?

A. Well, that is what determines the direction of rotation, and that, of course, affects the nuts as to whether they are going to step in or out.

I would like to say one thing more about this patent. It is to be understood that the spindles shown in Fig. 1 are in duplicate, another set like them being provided at the other end of the machine as stated in the patent. That was a customary arrangement in knitting machines. That is the same arrangement that is now used in all modern machines—to have double spindles for narrowing and controlling the carriers during narrowing.

That is the arrangement that is illustrated, for example, in the recent advertisement of the plaintiff and as shown in Defendant's Exhibit B for identification. That is, the spindles are located at opposite ends rather than a single spindle. This looks very much like the Sowter spindle, but it controls supplementary carriers.

Q. Will you now turn to the Schletter patent 1,198,482, — which I will call the Court's attention is a prior patent to the same patentee.

A. This invention relates to attachment for straight knitting machines. As near as can be ascertained from the drawings, it is specifically shown applied to a Cotton type [fol. 234] machine. It is specifically intended to be used to reinforce; that is, splice portions above the heels of the stockings. The form of mechanism is in principle like the previously mentioned Landenberger drum, only that in this case the drum 17 shown in Fig. 3 is fitted with a cam

18 which is formed at its edges with notches or variously positioned stops, said drum being racked by the pawl mechanism shown in Fig. 4, a chain 39 shown in Fig. 1 controlling the time moving drum 17, and in this manner determining the pattern that can be produced with it. One form of such pattern is shown in Figs. 8 and 9.

Q. And is this pattern chain a supplementary pattern chain, that is, an additional pattern chain to the pattern chain ordinarily employed with a knitting machine?

A. I do not know. There is not enough mechanism shown as to whether the same chain controls, let us say, the camshaft shifting and the machine to narrow, which is one of the purposes of the main chain.

Q. Will you refer to the last of the U. S. Patents, the patent to Zwicky, patent No. 1,608,285?

A. This invention relates to lap-regulating mechanism in full-fashioned machines, the idea being to position the needles at the time certain of them have additional yarn kinked around them so that such needles will receive slightly more yarn than the others in order that the laps of the thickened area will not become too tight due to the additional yarn and therefore cut holes in the fabric.

That is what has been referred to in this trial as the variable rocker movement. That is a variable rocker motion.

[fol. 235] In the manufacture of the modern stockings where splicing or split seam work is performed in narrowing, variable rocker motion is necessary in order to produce a practical commercial product. It is necessary to do much more than formerly for the reason that formerly stockings were made, let us say, of 8-thread, and reinforced 25 per cent. over that. Now practically the entire production in the full-fashioned industry today, and for quite a few years back has been on sheer hosiery, which, let us say, is produced of 4-thread silk and yet the reinforced portion must be as heavy as it was for the heavier stocking, so that the ratio between the fine fabric and the thick fabric is today much greater than it was before. So that it being desired to make the sheer fabric have as small overlap as possible in order to make it as sheer as possible, it is necessary to tighten the loop at the sheer portion to the extent that if you added the increased ratio difference necessary for the relatively heavy splicings used today, your loops

would be cut in the heavy portion, so for that reason you have to have means to knit looser in the reinforcing or splicings today. That was not a particularly difficult thing to do, nor was the mechanism very costly until diverging and converging means of reinforcing or splitting the reinforced designs were brought into use. Such angular lines required that the rocker motion rather than be the free simple one that could be possible with the vertical line, the suture or splicing line had to have cams or some means to vary the number of loops that were loosened as the heavier portions of the fabric had longer or shorter courses of [fol. 236] heavy loops, so that today for all those reasons you have to have what is known as variable rocker motions and this is one form of variable rocker motion.

I will refer to the mechanism shown, particularly Fig. 4. In order to be able without having a great number of cams on the camshaft with cams varying distances in proportion to the variation of reinforced area, course length; in this device the roller mechanism is operated by cam, is shifted sidewise by a right and left-threaded spindle shown in Fig. 4. In other words, by shifting the nuts 70 and 71 toward and away from each other the rods 73 and 74 are acted upon, which in turn affects the position of the rocker motion so that it can loosen the stitch for longer or shorter courses.

Q. And the stops 70 and 71 on the reversely-threaded spindle controlling the rods 73 and 74—what are those rods 73 and 74, are they carrier rods, point carrier rods or what? I call your attention to page 2, line 118.

A. The reversely traversing nuts 70 and 71 also control the extra yarn carrier rods 73 and 74. I made an error; it was not rods 73 and 74; it is rods 80 and 81.

Mr. Darby: That finishes our consideration of the United States patents, if your Honor please, and we will now take up a consideration of the foreign patents.

First I offer in evidence copy of British patent to Mather, No. 7,746 of 1847.

(Marked Defendant's Exhibit Q.)

The Witness: This invention is drawn for machinery for knitting stockings, and it states, commencing at line 10, page 2, that the invention is drawn to a "stocking frame

[fol. 237] or what is commonly employed for making stockings, knitted gloves," etc.

The term "frame" is quite customary in the British patent art and means a flat or straight machine.

Certain features of the invention (as stated commencing with line 27, page 2) are drawn to "apparatus for conducting, carrying or traversing the thread across the machine from side to side of the work, with suitable improved mechanism for determining the extent of motion of the thread carriers, that is, effecting the shortening or lengthening of their traversing motions for the purpose of conducting the thread over a more or less number of needles."

This "together with suitable apparatus or mechanism for effecting the 'heeling' of the stocking or dividing the making of the fabric at this time into two, three or more parts."

It is stated (commencing with line 19, page 3) that a third feature consists

"in the application and adaption of the above-named mechanism called the Jacquard cylinder or box, revolving with its pierced cards, to the stocking frame or machine."

Certain of the carriers were used to produce courses shorter than the width of the leg as mentioned commencing with line 18, page 4, in which it is stated that

[fol. 238] "the thread carriers for working the two side pieces of the heeling part of the stocking being turned up out of the way of the workman."

This is further indicated by the outline of the stocking shown in Fig. 14. There are a number of carriers used—Fig. 14 is on sheet No. 1. The heel pieces are the pieces marked a, the instep portion of the stocking being marked b. This stocking incidentally is the type of stocking for an English foot, that accounts for the long central portion.

Two carriers a, as well as another carrier marked b, are clearly shown in Figs. 1 and 2, the b carrier in large scale in Figs. 6, 7 and 11. These carriers are traversed on a triangular-shaped guideway d, Figs. 6 and 7; means at each end of the needle section consisting of collars f, varied in position by each of the nuts i to cause the carriers to lay yarn over a varied number of needles.

The spindle k controls the traverse of the carrier. This is rotated in a step by step manner by a ratchet 16 and pawl 18, clearly shown in Fig. 6, motion being imparted to the pawl by the operator manually moving the pawl lever 17, Fig. 6. It is to be understood that this patent goes back so far that power machines were not in common use.

That is a reversely-threaded spindle that is employed. I call attention to Figs. 1 and 3.

The rotation of the reversely-threaded spindle k effected as follows: Fig. 6 shows the pawl—those two pawls are shown; 18 is the pawl that pulls the thing in one direction [fol. 239] and the pawl 19 is really a stop pawl to stop it from going backward accidentally. No, this spindle is racked in one direction.

Q. It is racked in one direction by hand operation, and how is it racked back? It must be racked back by hand, mustn't it, in this type of machine?

A. Oh, yes. It is a hand machine. There aren't any power parts in it.

The Witness: I have a note here relative to back-racking, commencing with line 27, page 2,

"apparatus for conducting, carrying, or traversing the thread across the machine from side to side of the work, with suitable improved mechanism for determining the extent of motion of the 'thread carriers,' that is, effecting the shortening or lengthening of their traversing motions for the purpose of conducting the thread over a more or less number of 'needles'," • • • "together with suitable apparatus or mechanism for effecting the 'heeling' of the stocking."

In other words, the stroke could be lessened or shortened, although of course, as previously stated, there is no mechanical operation involved.

Mr. Darby: I might state for the record, your Honor, that on page 7 of the specification beginning at line 19 is a description of how the spindle is located in either direction by hand by the operator, it not being a power machine.

I now offer in evidence DePass British patent No. 10,405 of 1884.

(Marked Defendant's Exhibit R.)

[fol. 240] The Witness: DePass British patent No. 10.405 of 1884. This invention relates to "Improvements in Straight Knitting-machines."

As stated, commencing with line 9, page 1,

"The said improvements relate chiefly to the production of fancy knitted goods in several colors, and to the production of strengthened knitted articles, whether on a stripe on the axis of the web, and upon the whole, or a portion of this stripe, or upon the parts of the said web situated to the right and left of the said stripe, and upon the whole or a portion of the said parts."

As clearly shown in the drawings, Figs. 1 to 5 inclusive, all types of reinforcements are to be produced, certain of them as shown in Figs. 2 and 3 have the outline of the reinforced areas inclined in both directions to the wales. That is, the end of the pattern comes to a taper.

It is specifically stated, line 19, page 1, that the design "at its ends diminishes in the form of a series of steps"; also, line 21, page 1, that the design "may, if desired, be merely in the form of almost straight oblique lines." The outline of the pattern may therefore be inclined to both directions to the wales.

The machine shown is what was at that time known as a Dutch machine. This machine was one of the predecessors of the present Cotton full-fashioned machine. It was of the Paget type. It was built in Holland and was similar to other Paget machines in that it had a group of needles mounted to move with carriers laying the yarn in [fol. 241] front of the needles so that sinkers could kink into loops. In other words, it was like the Cotton machine in this respect except that the needles in the latter were mounted vertically, and in the Paget Dutch machine they were mounted horizontally, as clearly shown in Fig. 12 of the drawings.

As is clearly stated, commencing with line 24, page 2, and as shown in Fig. 9, three carriers were used, as was of course necessary to produce fabric such as that shown in Figs. 4 and 5. It is also stated in this paragraph that a control chain or counter was used. This is shown in Fig. 8.

In order to definitely establish the type of fabric that this attachment was to produce, I would refer to the paragraph commencing with line 44, page 3, which states how with

"three carriers employed singly or in combination, fancy knitted goods in several colors, or strengthened, may be produced by the juxta-position of yarns of different colors and sizes."

I would like to call your attention to the type of carrier traversing means being used. I made a note of this in my previous testimony. This is quite clearly shown in Figs. 6 and 7. The dogs in Fig. 6, those sort of tapered things in Fig. 6, they take the gears and are acted upon by cam F shown in Fig. 7 which disengage them from the driving means. In other words, the stop in that case is the piece F. That is bar B at the other end of the machine—there is one at each end. These pieces B and F were moved in and out by the mechanism in this case in the form of racks. [fol. 242] The teeth of the racks can be seen at G at the right hand side of F. So by positioning the stops B and F where desired, controlled by the chain mechanism, the carriers can be caused to stop after shorter or longer traverses.

Mr. Darby: I offer in evidence British patent to Roe of 1869, No. 1,991.

(Marked Defendant's Exhibit S.)

The Witness: This patent relates to "Improvements in the Manufacture of Looped or Knitted Fabrics."

The drawings show a two-section, power-driven full-fashioned machine of the Paget type, which as previously noted was in use prior to the time of Cotton. The machine is fitted with a cam shaft, traversing yarn carriers of varied length, and narrowing mechanism, shown at I think that is Fig. 2—the various cams in that shaft are shown on sheet 5. This is an early form of machine, somewhat similar to the machine shown in the previously described Willett patent, except that in this machine the cams and various power parts to control the mechanisms have been added. The machine is fitted with traversing yarn carriers shown in Fig. 5, the yarn carrier being numbered Q2, and there is also a narrowing mechanism shown. This takes the form of the ordinary narrowing points in use today, shown in Fig. 5, the points being numbered F3.

It is stated, commencing with line 27, page 3, that

"The carriers are operated" (meaning stopped) "by [fol. 243] means of a right-handed screw and a left-handed screw, each of which are provided with a notched disk—"

These screws are quite clearly shown in Fig. 7 and they are lettered S. Each screw being

"provided with a notched disk" (ratchet) "secured to one end; between these disks is a hand lever and reversible paw's, which lever and pawls are operated by hand, or"

as it is stated,

"they may be operated upon by a cam and levers in such manner as to cause widenings or narrowings to be made."

The last quotation is from the patent.

Upon examining the drawings, it will be seen in Fig. 5 that the carriers are in the form shown at Q2 and that they are fastened to a bar Q1 which can reciprocate in a larger bar Q. Fastened to the bar Q1 there is a member S13 which can be engaged with by either one of two traversing pawls, as shown in Fig. 7. The reason I am describing this in detail is because of the fact that the patent being so old, it is not shown so well, but it is all in there. These traversing pawls are fastened to a box S6, Fig. 5, supported by and traversing on a fixed bar S5. The box S6 is fitted with a downwardly depending pin S7, which is connected to a chain S14, said chain reciprocating backward and forward, all as shown in Figs. 5 and 7.

Mounted in front of the machine are spindles S, one having a right hand and the other a left hand thread and each [fol. 244] being fitted with a nut S12 as shown in Fig. 7. Each of these spindles is fitted with a ratchet S3 and reversely-racking pawls S4, as shown in Fig. 5. These ratchets and pawls are mounted closely adjacent to each other, as shown in Fig. 7, a single lever supporting and operating all the pawls, so that the operator may, by moving a lever forward as part of the ratchet pawl lever, cause a partial rotation to be given simultaneously to both threaded portions of the spindles; the pawls are shown as being manually movable into position, so that the two halves of the spindle can be simultaneously racked backward or forward.

I want again to remark that the inventor had in mind moving this spindle mechanically as stated in line 27, page 3, in either direction. I am not sure. It is very hard to figure how it was operated, so I want to get into the record how it operated.

The S9 carrier-traversing pawls, Fig. 7, discontinue the traverse of the carriers by contacting with their cammed ends, disengaging means S10 and S11, said means being found at each end of one of the sections in Fig. 7. These members S10 and S11 are shifted toward and away from each other by being formed part of or connected to their respective spindle nuts S12, two of which are shown in Fig. 7—one threaded right hand and the other left hand. Each stop nut is further provided with a projection S12 shown in Fig. 5, which may be engaged with its respective member Q5 forming part of the traversing carrier bar Q1. When Q5 is in position to stop the carriers, therefore, it contacts with its variably positioned nut stop S12, as the carrier [fol. 245] driver pawls S9 are disengaged from the carrier members S13 at each end of the stroke.

We therefore have in this structure a right and left threaded carrier stop spindle, which while shown separated into two pieces, obviously could have been made of one piece. The spindles are fitted with nuts which move to and from each other as the proper pawls engage with backward and forward racking ratchets, in this manner making it possible to stop the carriers in varying positions and so lay the yarn over a greater or lesser number of needles.

Mr. Darby: I offer in evidence British patent to Willett, et al., No. 573 of 1871.

(Marked Defendant's Exhibit T.)

The Witness: This relates to "Improvements in Machinery or Apparatus employed in the Manufacture of Looped or Knitted Fabrics."

The machine shown is a one-section flat machine common in use at the time this invention was filed. The machine was organized to narrow the point holders N^1 being shown in Fig. 3.

It is stated, commencing at line 30, page 4, that when the machine is arranged to produce "fancy fabrics we employ similar apparatus with the addition of the required thread carriers to supply threads of divers colors."

There is provided at the front of the machine a right and left-threaded spindle, more clearly shown in Fig. 2 and designated by the letter L in Fig. 3. The threads of this spindle engage with nut-like members M, movable backward

and forward at the time the spindle is racked backward or forward.

The nuts M are connected to the right and left portions [fol. 246] of the spindle respectively, moving toward and away from each other as the spindle is rotated backward or forward and so through the extensions M^1 position the yarn carrier stop members R2 in the proper position to cause the carrier to traverse a shorter or longer distance and so feed yarn to a lesser or greater number of needles.

In order that the spindle L may be racked backward and forward, there is provided on each end of the spindle a ratchet having teeth operable by the pawl in either direction of rotation. There is also an automatic racking mechanism having pawls which are capable of being manually moved into either of two positions of contact with the ratchets previously noted, enabling the spindle to be racked backward or forward. This automatic racking mechanism consists of a series of levers and links, one of the levers of which is fitted with a roller, and so on.

It must be borne in mind that full automatic machines were not common at the time this patent was filed, but the spindle could be racked backward and forward mechanically by power.

The select means as to whether the pawl could be engaged to rack backward and forward was left to the operator to do manually.

The stops controlled by the spindle, they in turn controlled the carrier rods which traversed less than the full width of the fabric being knitted.

Mr. Darby: I offer in evidence the German patent to Laue and Timaeus, No. 21,332 of 1881.

(Marked Defendant's Exhibit U.)

[fol. 247] The Witness: This patent shows a six Cotton type carrier bars applied to a Lamb machine. As has been previously brought out in the testimony, the characteristic feature of the Cotton machine is the multiplicity of carrier bars—long carrier bars on which carriers are mounted, and this patent is of interest in that it shows the same type of carrier bars used on another type of machine known as the Lamb machine. These carrier bars are clearly shown in Figs. 2 and 3, the carrier tubes or yarn ends being shown at 1, 2, 3, 4, 5, and 6.

This patent is merely to show it was common in Lamb machines to use multiple carrier bars.

Mr. Darby: I offer in evidence copy of British patent to Black, No. 13,905 of 1887.

(Marked Defendant's Exhibit V.)

The Witness: I refer to this patent merely to make it absolutely clear that the Paget type of carrier stop machine previously referred to is in effect like the Cotton type. This is clearly shown in Fig. 2; and in this figure a carrier is shown at F as being mounted on a saddle or slide on the bar A2, capable of being slid along the length of this bar either backward or forward. This saddle is formed with two latches, one of which is shown engaged with pawl *b*, and as shown, this pawl *b* is now ready to traverse the carrier to the right, there being two such pawls, *b* on the saddle, and B which is slid back and forth on the bar A. In operation, there- [fol. 248] fore, the saddle B would now move to the right and its pawl *b* pick up the carrier F. To the left of the carrier saddle this piece is unnumbered, but I think I will put a number on it. I will call it 1. This is really the stop piece against which the carrier abuts. There is a similar piece on the opposite end of the machine. So that as the carrier finishes its stroke at the right, the right hand pawl *b* will have lifted by the hump of the right hand cam 1, and by contacting with the cam the pawl will be entirely disengaged from the notch of the carrier F. The same action takes place at either end of the machine. It will be noted that there is an adjusting screw provided under the hump cam for actively stopping the carrier between needles as is necessary. In some of the other patents of prior art where I stated that the Paget type of carrier was used, this is the type I meant, and it can readily be seen that the hump cam 1 here shifted on the bar A2, so that a varied stop of the carrier can be effected, so that its stroke can be shortened and lengthened if means are provided to move these hump cams. It is also of interest to note that this patent furnishes a multiplicity of carriers. I would further like to say that the Paget machine, which as previously noted is the predecessor of the Cotton machine, made all kinds of fabrics having short courses and in every way produced regular full-fashioned stockings. This is well known to anyone who is skilled in the hosiery art.

[fol. 249] Mr. Darby: I offer in evidence British patent to Woodward and Shaw, No. 19,627 of 1891.

(Marked Defendant's Exhibit W.)

The Witness: This invention relates to Improvements in the Type of Knitting Machinery generally known in the trade as Cotton's. The invention is directed to improvement in yarn carrier stop spindles, Fig. 1 clearly showing a solid right and left threaded stop spindle. The inventor states, commencing with line 25, page 1, that

"The chief object of this invention is to obviate the necessity for the attendant who has the machine in charge, having to manipulate the racking arrangement" (spindle) "at both ends of the frame after each set of goods or parts of goods has been completed."

He means by that that it was customary to have spindles at each end of the machine so that by providing solid right and left spindles he had the spindles all at one place, so that whatever the operator had to do, he only had to go to one place.

Continuing, the inventor states,

"At one end only of the machine we fix a worm" (that is a spindle) "frame carrying two separate traveling slides.

"One portion of the screw" (spindle) "is cut with a left hand thread the other portion with a right hand thread, so [fol. 250] that when the screw is revolved the traveling slides" (nuts) "move in opposite directions.

"To these traveling slides" (nuts) "are fixed the stops controlling the various thread carriers."

As shown in the drawings, a solid right and left threaded spindle G is provided to which is fitted a pair of slides or nuts—one threaded right hand and the other left hand. These nuts D and D^1 are formed to provide supports for movable stop slides K, K^1, M and M^1, against which carrier abutments F formed on carrier bars E can stop, thereby limiting the traverse of the carrier bars. The same nuts are provided with extensions C and C^1, against which loop-lifting point bars B and B^1 can abut and so be shifted in conjunction with the greater or lesser traversing stroke of the carriers E.

The means for racking these spindles is not shown. It is merely stated, commencing with line 12, page 2, that,

"O is a pinion on the screw G" (spindle) "by which a step by step revolving motion may be transmitted to it in the ordinary way whenever the narrowing rods are to be shifted."

It is further of interest to note that the inventor states that the spindle can be racked in opposite directions. These traveling nuts may move in opposite directions, which infers that the spindles are intended to be run backward and forward.

[fol. 251] As to whether this mechanism could be used to produce any styled design intermediate between the selvage edges of the fabric being knitted I will say that the form of mechanism shown has attached to it a means to shift the narrowing points so that if designs were to be produced inside the selvages, it would be necessary to disconnect the narrowing portions from it. There are various forms of mechanisms in the prior art that permit a shift of the narrowing mechanism from one spindle to another. If the narrowing mechanism were disconnected, then of course the spindle structure shown with the stops to control carriers as you state; as it is shown, however, the narrowing takes place when the course is changed.

In other words, the mechanism provided by Woodward was for positioning, stopping carriers at varying positions during the process of narrowing.

Mr. Darby: During the process of narrowing.

I offer in evidence British patent to Lamb & Noon, No. 15,129 of 1889.

(Marked Defendant's Exhibit X.)

The Witness (continuing): I have some larger drawings of this. This is a very important patent on the points at issue here and I have prepared larger drawings.

This invention relates to an improved mode of manufacturing striped, knitted fabrics, as stated in the title. It is further stated, commencing line 16, page 2, that the "invention relates to an improvement to the knitting of hosiery [fol. 252] with longitudinal or downright stripes," and in line 19, page 2, "We now propose to produce these downright stripes in a zigzag form automatically," and as stated,

commencing with line 27, page 2, it is proposed "to give the striping thread carriers * * * a continuous traverse on one side of the stripe until the required amount of deviation is reached, and then reverse progressive traverse motion of the thread carriers," and so forth.

As stated, commencing with line 39, page 2,

"The striping thread carriers * * * are controlled by means of stop slides * * * to produce the irregular stripe, so racking in and out the pattern, and certain other stops, as to give the several thread carriers the progressive motions required."

The specific fabric that the device herein described is intended to produce is formed with split sutures. There is an explanation of the method of producing the lap commencing with line 45, page 2.

It is stated in line 54, page 2, that

"the slides will then be racked in the opposite direction to shift the progressive motion of the thread carriers to the right until the requirements of the zigzag pattern in that direction are reached. The racking of the slides will now again be reversed and so on until the zigzag stripe is completed."

An example of the types of fabric that the attachment is to produce is clearly shown in Figs. 8 and 9 of the patent.

[fol. 253] Q. Which are not reproduced on these drawings?

A. No. It is stated on line 4, page 3, that

"The slides are racked in and out, as required, by a train of gear wheels, which impart an axial motion to the traversing screws of the slides."

The device shown in Fig. 1 is applied to a conventional type of full-fashioned machine in which as usual the needles are rigidly fastened in a needle bar, which, as in other machines of this type, make the necessary movements to form the loops in conjunction with the sinkers.

The machine is shown as having 5-yard bars numbered 1, 2, 3, 4, and 5. In the particular type of fabric that is being produced the carriers 1 and 2——

Q. Let me interrupt there, Mr. Miller. Will you please describe the operation from these drawings so that the operation will be understood?

The Court: The thing he is talking about now is the thing that is shown on the drawing; 1, 2, 3, 4 and 5.

Mr. Darby: If your Honor can see that, all right. Go ahead.

The Witness (continuing): In the particular type of fabric that is being produced the carriers 1 and 2 shown in Fig. 3 produce the fabric from the selvage to the designs, while the carriers 3 and 4 each form one of the two designs, with a carrier 5 producing the body fabric between the two designs.

[fol. 254] Speaking of the designs now, they are those in purple and blue.

The Court: Different colors?

The Witness: Yes. The design part is the purple and blue color.

The Court: Yes.

The Witness (continuing): In other words, the carrier 5 produces the green part or the part between the design.

Carrier (1) in this particular adaption is used as the right hand carrier and is stopped at a selvage by a stop carried by a slide (c) at the right hand end of the machine, said slide being fitted with a nut connected to a single-threaded spindle as shown in Fig. 4.

The same arrangement is provided at the other end of the machine to stop the carrier (2) or the left fabric-forming carrier, as shown in Fig. 3a.

The spindle for the slide (c) is rotated in a step by step manner by the ratchet and small motion and a train of gears, just as the selvage formation in a regular full-fashioned machine is automatically altered to produce wide and then narrow body fabric. In other words these two edge carriers or selvage carriers so-called, one that produces the red fabric and the yellow like fabric——

The Court: One and two?

The Witness: Yes. They are stopped by the (c) stop which is just as they are in a regular machine—end stops. And if the fabric is to be fastened that is the stop that does the fashioning; the new feature being that series of stops [fol. 255] which is shown in Fig. 3 to be left of the (c) stop.

The carrier (1) is provided with an abutment, as clearly shown in Fig. 3, which is capable of contacting with a stop through carried by the stop lever (H) at the end of its traverse inwardly from right to left.

In other words, as that carrier moves from right to left it abuts against that screw.

The same type of abutment and stop is provided for carrier 2 at the other end of the machine as shown in 3a.

The stop H found at the right hand end of the machine, as shown in Fig. 3, is mounted on a slide F, which is free to move parallel to the carriers in either direction. That is the F slide that has nothing to do with forming the heels or shaping the garment. That has to do with positioning the carriers to make these designs. So we have a situation here where our end stops are the stops (c), the new stops and nuts, and so forth, provided at F with various screws which can stop all the carriers when they are making this pattern work.

This slide F as shown in Fig. 4 is fitted with a nut for engagement with a threaded spindle, said spindle being step rotated back and forth by the ratchet (i) and (i^1). The ratchets have opposed teeth, operated by suitable pawls (i^2) and (i^3) which are connected to a roller lever (i^2), said lever being automatically operable by contacting with a cam (i^3) attached to the cam shaft of a machine, as shown in Fig. 5, in this manner making it possible to mechanically move the slide F either backward or forward, parallel to the carriers.

[fol. 256] In other words that E is the regular common shaft of the machine and on that is a cam which moves a pawl lever to which is fastened two pawls that engage either to the right or left of the ratchet which have opposed teeth somewhat like the Sowter patent, only in this case he goes a little further than Sowter as he actually shows which of those chains or pawls engage, and in this, as differing from Sowter here, we are concerned with the supplemental carriers, not just body carriers.

In order that the carriers 3 and 4 can produce the other part of the design it can be stopped varyingly to match the carrying motion of the carriers 1 and 2, and so form a suture, they are provided with abutments as shown in Figs. 3 and 3a, which contact with adjustable stop screws carried by stop bracket G fastened to the slide F, in a

movement from left to right. There are also provided at the left hand of the machine, similar abutments screws and stops like this G^1 fastened to the slide F^1 as shown in Fig. 3a.

In order that the carrier 5 which lays yarn to produce the center portion of the fabric, between the patterns, can be varyingly stopped—I am speaking of the green fabric now—in accordance with design requirements, its bar is also fitted with abutments, the right hand end of which contacts with an adjustable screw carried in the right hand stop bracket G, thereby stopping the carrier 5 at the end of its traverse from right to left.

It is interesting to note a statement commencing with line 36, page 5 of this patent:

"It will be understood that the progress of the stripe may be continued to any desired length through the work. [fol. 257] If, however, it is desired to stop the striping * * * the thread carrier bars not required for future use, are to be locked out in the usual way."

To this end, there are provided means for readily disconnecting the carriers from their driving means, so that any of them may be idled at the end of the needle sections. That means is merely that the slide against which they abut is taken out of the way. In other words, it in no ways affects the other operations or mechanism parts of the machine. It is a very common way to pull a carrier stop out of the way.

Q. So that the stops which control the traverse of the carrier rod are made removable so that the carrier can go right through to the end of the machine?

A. Yes.

The Witness: If I may be permitted to say so, it is interesting to note that Lamb and Noon's inventions were made at about within two years or so of the same time of this Woodward invention with the right and left threaded spindle and it is interesting to note that the end of the Woodward Spindle which was not fitted with ratchets is exactly the same design as shown on the Lamb and Noon patent, and both being Englishmen and both working in the same plant before, it occurred to me to be the same type of machine.

Mr. Darby: I offer in evidence the Claringburn British patent No. 4,967, of 1890.

(Marked Defendant's Exhibit Y.)

Mr. Darby: I also offer in evidence sheets 1 and 2 of [fol. 258] the Figs. 3, 3a, 4 and 5 of the Lamb and Noon patent last above referred to.

(Marked Defendant's Exhibit Z.)

The Witness: This invention, as stated at line 5, page 3, relates "to straight bar knitting machines known as Cotton's patent."

It is specifically drawn to shifting a multiplicity of groups of loop-lifting points to produce widened and narrowed fabric in which narrowings and widenings occur at the end and inside the edges of the fabric, said fabric probably being used for undervest. The fabric was narrowed and widened and therefore required that the loop-lifting points be shiftable toward and away from each other.

This mode of moving the points differs from the conventional in that the points here have to move not only toward each other mechanically but have to move away from each other at the times that the fabric is to be widened.

It is stated, commencing with line 24, page 3, that

"the needles, thread carriers, and the ordinary parts of the machine are the same as usual * * * I have therefore not shown or described any of these parts except where necessary to explain my invention."

As the loop-lifting points are constructed to move forward and away from each other, therefore producing widened and narrowed fabric, it follows that the thread carriers must also be controlled to produce wider or nar- [fol. 259] rower fabric in order to lay the yarn to varying widths of fabric as determined by the points.

Q. Can I shorten it by asking you this question: Does this patent illustrate another instance of the prior art where narrowing, that is, where controlling of the narrowing points, as well as narrowing the traverse of the thread carrier is effected automatically by the means of threaded spindles in either direction?

A. Yes. It is very similar to the Sowter patent that was previously described.

Mr. Darby: All right. I think that will be sufficient. I offer in evidence copy of Claringburn British Patent No. 7,068 of 1891.

(Marked Defendant's Exhibit A-1.)

The Witness: This is just another prior art patent very similar to the Claringburn of the type of two-way, threaded two-way racking stop spindles, more clearly showing, however, that carriers are to be stopped instead of merely stating, as in the other Claringburn patent, that carriers are used and are stopped by the spindles.

An interesting feature to us is that the stop *n* on the nut *o* is used to stop carriers approaching from either direction, that is, against both sides of the stop, the collar stop in the carrier *m* against the outer side of the stop *n* when the carrier *m* is moving from left to right, from the selvage inwardly, while the stops *v*, *u* or *n* stop the *t* carrier in its movement from right to left.

Another new feature not found in prior art is the fact that the fabric that is to be produced here is shaped, that is, the intermediate portion is shaped independent of [fol. 260] the normal selvage as shown in Fig. 2. In other words, there were separate pieces of fabric to be formed that were shaped that formed the breast portions shown in Fig. 3; that is for underwear and ladies vests. Of course when fabric is shaped as shown in Fig. 2 from the lines *g* h^1 *s* and *g h s*, that is the right fashioning of the center portion it is to be understood that if the points stop the carriers have to stop.

Mr. Darby: I offer in evidence copy of the German Lieberknecht Patent No. 117,173, and ask you to take that up next.

(Marked Defendant's Exhibit B-1.)

Q. And I will ask you to consider that patent particularly with reference to the subject of interchangeability of narrowing control and thread-carrier control?

A. This invention relates to stops for carrier and narrowing rods for flat machines. As clearly shown in Fig. 2, the stop means consist of a pair of nuts K fitted to a threaded spindle L, with ratchets fastened thereto. The nuts K are provided with carrier stops *f* and f^1, against which the abutments *i* and i^1 of the carrier rods are stopped in their

traverse, the traverse of any one carrier in any one direction being against one of the nuts and against the other nut in the other direction of traverse.

It is not contended in this patent that it is new to so construct spindles and nuts. The object of the invention is to position stop means in a multiple section machine, other than at the ends, in order to lessen the expansion and con- [fol. 261] traction inherent in long carrier bars. The same type of mechanism is also shown for positioning the narrowing rods for the narrowing points, this merely being a duplicate mechanism of the device used for stopping the carrier rods.

There are many machines, particularly foreign machines which are constructed with this feature; that is the mounting of the spindle and nuts somewhere else than at the ends. This is usually the middle of the machine, whereas the ordinary American machine is built with the end stop spindles at each end.

Mr. Darby: I offer in evidence the British patent to Cotton No. 208,362. I may tell the Court that this British patent to Cotton was cited by the Patent Office against Schletter as a complete anticipation. The file wrapper shows that that action was acquiesced in by the patentee and he purported to overcome the effect of the British patent by then injecting into his application for the new patent in suit for the first time a reference to the old abandoned application wherewith the Patent Office withdrew the citation.

(Marked Defendant's Exhibit C-1.)

Mr. Darby: Will your Honor temporarily ignore these typewritten sheets in there. It was prepared for the Court's use, but I have not fastened the drawings.

Mr. Howson: I don't want to argue the case at this point, but there was one remark made with reference to the action of the Patent Office where he said Schletter acquiesced in [fol. 262] something or other. I just want to make a note that we do not agree with that.

Mr. Darby: There was no traverse of the rejection, is what I meant.

The Witness: This invention relates to improvements in connection with rotary or straight bar knitting machines and is particularly adapted to the type known as Cotton patents, page 2, line 35.

It has particular reference, as stated at page 2, commencing with line 43, to such arrangements as are applied to

"'Cotton's patent' or similar knitting machines for 'splicing' or knitting in an extra thread to strengthen certain parts of hosiery or underwear" • • • "it is more particularly designed for effecting improvements when" • • • "'high splicing' in hose or the like is being made, and where the top of the splicing is graduated so as to rise to a point" • • • "generally known as 'graduated splicing.'"

It is stated, commencing with line 70, page 2:

"The mechanism now to be described consists of improved variable stops and associated parts automatically controlling the various length of traverse of the splicing carriers as desired."

The mechanism is clearly shown in the one sheet of drawings and takes the form of a right and left threaded spindle [fol. 263] lettered D^4. Each of these threaded portions are fitted with a nut D^2 and D^3, respectively, a pin disc racking arrangement, D^7, being provided for turning the spindle, a pawl engaging with the disc pin D^8 as shown in Fig. 3. This motion effected the turning of the spindles taking place on the upward stroke of a bar D^{10}.

It is interesting to note that it is stated in line 83, page 2, that the

"two nuts or boxes approach or recede from one another,"

whereas his spindle is only racked automatically in one direction, so that only one ratchet and pawl are provided.

I don't know what the inventor by making that statement meant as it is not shown. He probably meant it is racked out by hand, or he quite probably meant it could not be racked in two directions.

The inventor states, commencing line 41, page 3, that the device can be mounted at "any convenient part of the framing of the machine." I think that about covers that.

Mr. Darby: I now offer in evidence a photographic copy of a book entitled "Knitting Mathematics and Mechanisms," published by J. W. Hemmings & Capey, Printers, Charles Street, in 1923, which is an article "Prepared for

the Textile Trades Advisory Committee of the City of Leicester Municipal Technical and Art Schools, by John Chamberlain," and particularly pages 125, 126 and 127 of that article.

(Marked Defendant's Exhibit D-1.)

[fol. 264] Mr. Darby: I call your Honor's attention to the figure on the second page as to the reversely-threaded spindle and the screws.

The Court: There is a new name for them in there, "drunken worms."

Mr. Darby: The article we rely on is the screws and screw threads at the bottom of the page. Without taking the time to read it to the Court now, I call attention to the last paragraph of this article:

"Another use of the square thread is for gradually reducing or increasing the traverse of yarn guides. Fig. 4, Diagram 8 shows a spindle A cut with right-hand thread B and left-hand thread C. Rotation of this spindle will cause screw-boxes or specially constructed nuts to move in opposite directions for the purpose previously mentioned."

Q. Mr. Miller, what would that statement contained in this publication mean to one skilled in the art?

Mr. Howson: I object to that, if the Court please. It is asking the witness to speculate on something and interpret something which does not require interpretation.

Mr. Darby: I am asking for an expert opinion.

Mr. Howson: It is a hypothetical question anyway; referring to one skilled in the art.

Mr. Darby: He is one skilled in the art. What does it mean to him.

[fol. 265] Mr. Howson: He is produced here as a professor. He may or may not be well skilled, and I don't know why he should speculate on what one skilled in the art would say.

The Court: He may answer subject to the objection. I doubt that it is proper.

Q. (Read.)

A. Why, it would mean that having right and left-threaded spindles and racking them back and forth they control yarn carriers, and if I may, I would like to say that spindle shown in Fig. 4 is exactly the type of spindle shown

by Woodward and here, of course, it states that it can be moved backward and forward as he does in his patent.

Mr. Darby: At this time, if the Court please, I would like to interrupt the witness long enough to offer in evidence evidence pertaining to prior use which is admissible under the stipulation, and whenever the Court will desire I want to ask this witness something about two of the instances of prior art relied upon. If the Court would rather have me recall him for that purpose or interrupt his examination to offer it now, I will abide by the Court's wishes.

The Court: It is wholly immaterial to me. Have you any wish, Mr. Howson?

Mr. Howson: No.

The Court: Follow your own inclination.

Mr. Darby: Then I will come back to that.

[fol. 266] By Mr. Darby:

Q. Have you prepared from the instances of the prior drawing showing various types of spindles employed, noting the purposes for which they are employed?

A. I have.

I will describe what I have illustrated and the purpose. I think we better look at Sheet 2 first. I see it is not numbered——

The Court: It is entitled "Spindles of Prior Art." It does not bear any number.

The Witness: Yes, and it is the sheet that has the whole sheet filled with spindles. The upper one, the top one—we will call this sheet 2 that we are now on and the other one 3. I am now going to refer to sheet 2.

Fig. 1 of sheet 2 shows the ordinary end spindles of the regular Cotton carrier end stops. These spindles are threaded one way, there being one of them mounted at one end of the machine and one at the other. The threads at one end usually being opposite to the threads at the other end. Each spindle is fitted as shown on the sketch with a single ratchet. Such spindles as are shown here for instance are common——

The Court: Haven't you told me all about these spindles as you talked about these various patents from which they are taken? Is it necessary——

Mr. Darby: No, sir.

The Court: Each of these purports to be an illustration of the spindle that is taken from one specific fact which the [fol. 267] witness has at some length explained. Is there any necessity of covering that ground again?

Mr. Darby: I did not intend to have him do that.

By Mr. Darby:

Q. Are they shown in the approximate position of the bed of the machine in this drawing?

A. Yes.

Mr. Darby: I think that is all the explanation we need in connection with this first sheet.

Q. Now, about the second sheet.

A. I would like to say this about it, though, if I may.

The Court: Go ahead.

The Witness: It will be noted that some of these spindles are threaded one way and some threaded two ways, and some fitted with one ratchet and some with two or more ratchets.

The Court: You have told me all that once. It is perfectly obvious which way the screws turn in each one of these.

Mr. Darby: All right.

Q. Now what have you to say as to the other sheet?

A. Sheet No. 3 shows the carriers and bars as ordinarily used on Cotton full-fashioned machines to show how they might well be used with the right and left threaded spindle as shown in the Woodward patent.

[fol. 268] Mr. Darby: I offer these two sheets in evidence.

(Sheet No. 2 marked Defendant's Exhibit E-1.)

(Sheet No. 3 marked Defendant's Exhibit F-1.)

Q. Mr. Miller, going to the subject of sutures: In the case we have already referred to, the herringbone, 2-needle lap, 4-needle lap sutures, what type of suture is the apparatus shown in the patent in suit capable of producing?

A. The suture in which the yarns are floated, as it is mentioned in a number of places in the patent; that the yarns are to be floated at the suture.

Q. Is that what you refer to as the herringbone suture?

A. The herringbone suture has floated yarn at the sutures.

Q. Is the apparatus as shown by the patent capable of producing any other type of suture; that is the apparatus as shown with the undercut stop?

A. Yes, it is possible. You mean as far as the stops are concerned? Not as to the fact that the machine does not show enough operating parts?

Q. Just so far as the stops are concerned.

A. The stops could be used to produce what I call, for want of a name, because it is a new type of suture—at least one that I am not familiar with—that is a herringbone 2-needle lap suture. That is, it has the floats of a herringbone and then in order that the holes that otherwise would be formed are covered, the 2-needle lap is given in addition to the herringbone shift.

Q. In producing the herringbone suture, type of suture, either alone or in conjunction with lap, what type of sinkers [fol. 269] does the machine require?

A. In the formation of any type of herringbone it is necessary to have long and short nose sinkers. I would like to say this about long and short nose sinkers: years ago all full-fashioned machines had two types of sinkers, long and short noses. The dividers had long noses and the jack sinkers had short noses, so that the machine as constructed in a normal way was capable of producing herringbone splits. As the machines, however, became finer, and particularly knitted fabrics of silk were in demand, the long and short nose sinkers could not produce the fine even wale fabric desired, so that for that one reason—either that with other reasons—the sinkers were all made of one length, except at such places where a herringbone split was to be formed. The herringbone split at that time was the common split juncture in use. If, now, you make a herringbone split junction that is on the diagonal to the vertical wales, in other words, with the joint of the loops taking place at different wales, depending upon the shift of the design, it is necessary to use short and long nose sinkers around those needles, or the number of needles that produce the shog effect in the pattern. In other words, if the shift in the pattern is 40 needles around, it means around 40 needles you have to use long and short nose

sinkers if you are going to produce a floated type of split juncture.

The reason why in Schletter it is quite obvious that is what he wanted to produce is that the operation of the undercut stops he shows could not be used for any other purpose except making herringbones. It is quite obvious [fol. 270] to me that the split block that is ordinarily used on full-fashioned machines, that is, just a slot that has a little undercut portion that moves up and down; it does not move parallel to the machine at all; it is merely up and down, so that when the carrier strikes it it can have a delayed motion necessary to make the herringbone,—Schletter took the split block and mounted it on nuts so it can be traversed parallel to the other traversing parts of the machine and it is his invention as stated in there to float the yarn, which, at his time, was the common way of making a split. After making the split, however, it became obvious that you could not make a herringbone split on the diagonal without making holes, so that the way out appeared to be to make an additional lap which I have called by the term "2-needle lap herringbone." The difficulty with that, as I pointed out, was that you require these long and short nose sinkers, and a machine having, in my estimation, short and long nose sinkers over any area of the needles could not be used commercially today, and in fact none of them have been sold for many years. A manufacturer that would try to sell a machine for long and short nose sinkers over any number of needles could not sell them because the work would be inferior as to what is demanded in the modern machine.

By Mr. Darby:

Q. Let me interrupt one minute. If you were going to enable the producing of split fabric at an angle anywhere between the selvage edges how far across the machine [fol. 271] would you have to have alternating long and short nose sinkers?

A. Just as many of them as taken in by the design.

Q. In other words, you would have to have them clear across the machine if you wanted to produce a design in the selvage?

A. Yes, but actually we do not go across. We go about 40 or 50 needles, but that bundle of sinkers would have to

have long and short nose sinkers. To make a practical split juncture, using the undercut, movable stop shown by Schletter, you are forced *to* to make a pattern that is not practical—not with the fabric itself, but the machine you would have to use to make that pattern would not in any other sense be practical for the reason you would have to use long and short nose sinkers and in that kind of machine you could not use them.

Now, the way you could make a lap juncture using part of the Schletter feature is to entirely eliminate the undercut stops and the cams to move them and everything Schletter has applied in this patent and entirely eliminate that and merely use the solid stop, not undercut, such as for instance we have shown in a number of these prior art patents. For instance a stop as shown in Woodward, which is a solid stop, and the way you make a lap then is to lap over further, say four needles. Two needles won't do it, because that will leave a hole at the shift. In one of these large drawings I could show if you wished a 2-needle lap, and when you start to make a diagonal shift at the time you shift you would make a hole, so in order to close the hole, you have to make a 4-needle shift.

I have prepared drawings illustrating these different [fol. 272] types of sutures that have been described by me. I produce them and will describe the actual fabrication.

Fig. 1 of these drawings shows the vertical herringbone split suture juncture, such as was in common use at the time of the Schletter pattent. This fabric was considered a very desirable form, by reason of the fact that at the suture or juncture of the loops at C-D of Fig. 1, no appreciable thickening resulted, it being understood that the darker yarn area, if a split was to be formed, for wear purposes, was made of heavier yarn than the light portion of the fabric, but with the herringbone type of suture, the C-D area was not appreciably thickened over the dark area.

I have had fabrics made showing this type of suture. The mechanism usually used to stop the carriers to produce the variable sutures as shown in the drawing Fig. 1 and in the samples submitted, takes the form of the mechanism shown in Fig. 2. As this has been described before, I will not describe it again.

Q. To make it clear, it has been described in connection with page 54 of Plaintiff's Exhibit 6, which is the Textile

book. At this time I will interrupt you just long enough to offer into evidence the fabric referred to by the witness.

(Marked Defendant's Exhibit G-1.)

The Witness: To make this kind of a juncture, it is necessary to use at the place of the junction special short nosed sinkers as shown in Fig. 3 of these drawings, which shows at *g* the regular sinker. At *g'* the special split short-
[fol. 273] nosed sinker, the other two figures H^1 and H represent dividers that are used to sink the yarn between all the needles.

As has been previously explained, the yarn as it is first kinked by the sinkers is formed around every pair of sinkers. This is clearly shown in Fig. 4.

The black yarn a^1 being shown as kinked around the pair of needles between the right hand sinkers *g* and g^1. The diagrammatic view of the end of the carrier tube shows at *f* with the black yarn a^1 stretched between the last sinker g^1 which, as previously noted, and shown in Fig. 3, is of the short-nosed type.

The sinker adjoining this to the right it will be noted in Fig. 4 is of the regular long-nosed type. With the yarn kinked as shown in Fig. 4, the next movement in knitting, kinks the yarn around every needle as shown in Fig. 5. The black yarn now being kinked around every needle, by reason of the dividers, one of which is shown at *h* as having come in. It is understood that all these dividers come in *en masse*, that is, as a unit. Upon continued knitting the elements assume the position as shown in Fig. 6, and I wish to draw attention to the fact that when the elements reach the position shown in Fig. 6, the carrier *f* has remained at rest over divider h^1, which is the divider that is between the two needles C-D of Fig. 5, that are to form the suture, so that in Fig. 6, as the needles move outward and so take the yarns $a^{1\,1}$ off the ends of the sinker nose, the carrier *f* has remained at rest over the divider between the suture needle C-D. It is at this time that the delayed action of the carrier must take place in order that the
[fol. 274] floats *e*, Fig. 1, can be formed. At this time, therefore, and before the needles move toward the sinkers again, the carrier *f* is shifted into stop dash position as shown in Fig. 6.

That was accomplished by the undercut in the stops, and must take place at very closely to the time shown in Fig. 6, for as the needles go into their next position, moving towards the sinkers and with the kinks of the yarn under the sinkers in order to finish the yarn into loops shown in Fig. 7, that is the last course of loops shown in the black yarn in Fig. 7 are the kinks of yarn shown as $a^{1\,1}$ in Fig. 6. As these needles move in the position shown in Fig. 7, it is necessary that the bar of yarn marked e^1 in this figure, and under the sinker g^1 and over the divider and sinker adjoining the g^1 sinker to the left, as shown in Fig. 7; in other words the yarn e^1 shown in this figure must be in position as shown in this drawing in order that upon subsequent movement upwardly of the needle C-D the yarn e^1 will be floated to the back of these needles. So that it eventually assumes the position shown by the e float of yarn in the lower portion of this figure. If, therefore, the sinker g^1, Fig. 6, were not shorter than the sinkers adjoining it on each side, the yarn instead of assuming the position shown in Fig. 6 and so properly later forming the float e, might well go to the wrong side of the nose of the sinker g^1 and so lay on top of the g^1 sinker instead of under it in Fig. 7. Upon subsequent movement of the parts, the needles C-D having come up, the yarn e^1 is wrapped around these needles as shown in Fig. 8, thereby having commenced assuming the position shown in e of the same figure.

[fol. 275] The carrier f during the movement of the elements between 7 and 8 has been at rest over the h divider shown in Fig. 8. That is, the carrier has been resting against the undercut portion of the carrier stop, upon carrier reversal to the right after Fig. 8, thereby bringing the left hand carrier not shown in the previous figures into the position shown in Fig. 9, that is again resting this carrier over the same divider with the a^1 for the f^1 carrier rested prior to its shifting in its delayed action, that is the carrier f of the b^1 yarn in Fig. 9 rests over the same divider h^1 that the f carrier for the a^1 yarn rested over in Fig. 5.

The jack sinkers having all their kinks of yarn from the needles as shown in Fig. 9, the a^1 yarn having formed the float around the suture C-D in its movement from left to right with the yarn b^1, that is the thin portion of the fabric having formed this kink on the last sinker on the

right of the b needle forming the suture as shown in Fig. 9, showing all the parts in this Fig. 9 is exactly the same insofar as the position of the elements is concerned as the elements in Fig. 5 with the exception that it is the b^1 carrier that is in position over the divider between the suture needles. The movements of the elements from this point on, that is from Fig. 9, will be the same, only on the opposite end as the movements just described. In other words, it is absolutely essential that the short-nosed sinker be used between any pair of suture needles, as long as there are only a pair of such suture needles, it is apparently a simple matter to use two special short-nosed jack sinkers on each side of the suture needles; but assuming it becomes necessary [fol. 276] or desirable to form sutures that are inclined to the wales, that is, if the same suture needles are not used throughout the formation of the suture, so it becomes necessary to use numbers of these special short nosed sinkers.

The objection to using these short-nosed sinkers arises from the fact that their use in modern machines can not be considered by reason of the fact that due to their use imperfect fabrics are produced in a number of places. One place in particular, and one very easy to see, is the appearance of fine-gauged fabric in long and short-nosed sinkers. I have such samples here. I am referring to the fabric that is in evidence as Exhibit G-1.

I will point out the defect in that exhibit. I call attention to the alternate striped effect produced in the black portion of the fabric in which every other wale appears to have a different stitch than the alternate wale.

A further objection to the use of short and long-nosed sinkers arises from the fact that when they are used at a selvage, as would be necessary if designs are to be produced for herringbone sutures, it is practically impossible in commercial practice to form what are known as clearn selvages, that is, selvages in which the successive interknitting of the yarns, as for instance on the right hand edge of the fabric shown in Fig. 1, will result if certain of these reverse yarns are pulled out or certain of the loops in the last wale, and thereby the stitch—that is, the wale itself will not be properly formed, so that upon subsequent seaming of the stocking, considerable uncertainty exists as to whether the seam can be made fine; that is, whether it can [fol. 277] be sewed in on one or must be sewed in on more

wales. In other words, there is no certainty as to the exact width of the goods.

Mr. Darby: I offer in evidence the drawings produced by the witness, Figs. 1 to 9, inclusive.

(Marked Defendant's Exhibit H-1.)

The Witness: In the old machines, it is true that short and long-nosed sinkers were used, but in these machines the grade and type and weight of fabric was entirely different than in the commercial machines today, where extreme sheerness and a fine gauge fabric are demanded.

Furthermore, the industry is so far over-machined and can produce so many more stockings than the public can buy, that competition has reached the point and is so keen that the minutest imperfection in hosiery prevents its profitable sale, such as streaks in hosiery or bad selvages might very seriously interfere with the sales of those goods. In any case, machines having only short-nosed sinkers could not be sold today, that is, if the long and short-nosed sinkers were in any number. One or two do not distort the fabric enough to be really objectionable. So if after the long and short-nosed sinkers as a whole were removed from the machine it was still desired to produce herringbone for particular sutures, the machine builders sold machines with one length sinker except at the place where the suture was to be formed.

I have prepared drawings showing the next type of suture, which I am prepared to discuss.

[fol. 278] That type of suture is the herringbone suture just described, but in a diagonal form; that is, it shows an attempt at using the herringbone suture and have a juncture inclined to the wales and the courses.

Commencing with course 1, it will be seen that there are three views of fabric and yarn. The one yarn shows the fabric loops after they are formed; the next one to the right it shows the yarns as they are laid against the needles while the next yarn, the figure to the right of that shows the yarn as it is laid into the sinkers.

The reason why the yarn laid in the sinkers looks entirely different from the yarn laid around the needles is by reason of the fact that the carrier that lays the yarn must pass the last active needle by an index and a half so that the

traverse of the yarn in the carrier is an index and a half longer than the last needle that engages with the yarn.

In the carrier movement diagram which is the one that lays the yarn to the sinkers just referred to, it would appear as though laps were being formed at all of the courses; that is, that there was a place—there is always a place against the needles where there was yarn, but bear in mind the fact that there is an index and a half excess movement in the carriers. If now we referring to the yarn laying diagram we will see that in the fifth course that there is a place where the yarn—where needles 4 and 5—needle numbers being at the bottom—do not receive the yarn which results in the hole shown in the fabric diagram in that course. Such a hole, due to the preceding course that is the fourth course of loops, those loops will drop-stitch and [fol. 279] make what is known in the trade as a runner and will continue down the stocking.

Q. Pardon my interruption. Have you available fabrics manufactured in accordance with that method, illustrating in the fabric the drop-stitch referred to?

A. Yes, I have fabrics prepared which show that the making of a small hole results in a drop-stitching of the loops previously formed as well as those following. The upper loop above the hole will also drop-stitch.

Mr. Darby: I offer the fabrics produced by the witness in evidence.

(Marked Defendant's Exhibit I-1.)

Q. As I understand you, the herringbone type of suture at these diagonals to the wales in the manner contemplated by the apparatus shown and described in the patent in suit, produces this type of suture, is that correct?

A. Yes. And if it produces this type of suture or product, the patent is as illustrated in Defendant's Exhibit I-1?

Mr. Darby: I offer in evidence the drawing used by the witness.

(Marked Defendant's Exhibit J-1.)

Q. I next call your attention to drawing illustrating the two needle herringbone lap; is that the type of suture which you have referred to as its name having been coined by yourself?

A. Yes, this type of fabric I never saw before until I got into this case. I will describe that.

In this fabric the floats common in herringbone fabric remain. With the addition of two wales adjoining such floats in which a reinforcement has been formed. That is, the [fol. 280] suture is formed from four needles, two of which are reinforced and two of which have floated yarns so that it is a combination suture, not having to my knowledge ever having been produced before, although I would like to say that two needle lap sutures had been made before, as, of course, had the two needle herringbone, so you combine the two sutures. I have made fabrics illustrating this type of lap.

Q. Will you point out the loop structures incident to the use of the herringbone in the bias suture. Are they plainly visible?

A. Yes. You can see the loose floats of yarn and on the outside you can see it takes four needles to make the juncture.

Mr. Darby: I offer these fabrics in evidence as illustrating the 2-needle herringbone lap.

(Marked Defendant's Exhibit K-1.)

Q. Will you state, Mr. Miller, whether or not stockings employing this type of suture, namely the 2-needle herringbone lap, are practical commercially?

A. No. As mentioned before when referring to herringbones, this style of herringbone—part of this suture is still composed of the herringbone float which would necessitate the use of short and long nose sinkers, which, as pointed out, is not practical in modern machines. Whether the fabric could be commercialized, I do not know, but I do know that commercially it could not be produced.

Mr. Darby: I offer in evidence the small drawing of the 2-needle lap herringbone structure.

(Marked Defendant's Exhibit L-1.)

[fol. 281] The Witness: I am familiar with the attachments manufactured and sold by the plaintiff, assertedly under the Schletter patent in suit. None of the attachments made and sold by the plaintiff commercially make any of the sutures that I have thus far described. I am familiar with the defendant's machine. The defendant's machine or at-

tachment does not make any of the sutures that I have thus far described. I call attention next to the 4-needle lap split and will briefly describe that and point out the difference between it and the other sutures that I have heretofore described.

With this type of suture it is not necessary to float the yarn. The yarn moves from course to course without floating across any needles. It will be noticed that this yarn is closely wrapped around the edge loop wherever the end of the suture may be. The attachment shown and described in the Schletter patent is not able to make this type of suture. The attachments sold commercially by the plaintiff could make this type of suture. I heard the testimony of several hosiery manufacturers yesterday to the effect that they acquired attachments from the plaintiff beginning in 1927, employing 4-needle lap. This is the type of suture which is known generally in the trade as the 4-needle lap. The defendant's structure can make this type of suture. I produce samples of the fabrics manufactured employing this type of suture. That type of suture overcomes the disadvantages of the herringbone type.

Mr. Darby: I offer in evidence the drawing of the 4-needle lap produced by the witness.

(Marked Defendant's Exhibit M-1.)

[fol. 282] Mr. Darby: I also offer in evidence the fabric produced by the witness as illustrative of the 4-needle lap suture.

(Marked Defendant's Exhibit N-1.)

Q. In Defendant's Exhibit C for identification there is contained the statement in the advertisement of the Plaintiff's Company of a device "which eliminates the 4-needle overlap which causes a bulky line where sole and instep are joined." Is the 4-needle lap split type of suture regarded in the art as a disadvantage in any respect?

Mr. Howson: Objected to what is regarded in the art. He can state his own knowledge.

Q. All right. State your own knowledge. Do you regard the 4-needle lap suture as objectionable in the production of the present modern type of stockings?

A. Why, yes. The objection to it, is that it makes a bulky seam, and further, what is not desirable, is the fact that not

only is the seam bulky, but due to being reinforced for 4 needles a more undesirable juncture is formed because you would have to plate on four needles to make a nice looking juncture. It is so wide that knitting with two threads it would look very ragged if it was not plated, even though in the same color, unless you use this so tight that it would be observable. If that was a narrower lap plate it would not be so necessary. 2-needle lap is employed in the art principally today although there may be attachments that still use 4 laps that have not been changed over. But most of them, as far [fol. 283] as I know, have changed over to 2-needle laps.

Q. Will you please refer to this drawing for the 2-needle lap and point out its differentiation from the other type of laps you have already discussed?

A. This shows a 2-needle lap diagonal suture. There is no floating of the threads. In fact the position of the thread from course to course is very similar to the 4-needle lap, the only difference being that here in this case there are only two needles that have the reinforced laps, whereas in the other case there were 4 needles. I produce fabrics illustrating the 2-needle type of lap. I have had these fabrics knitted with the 2-needle laps and it will readily be seen that the mottled effect of the plating is greatly reduced as it is only extended over 2 needles instead of 4, as is the bulkiness likewise being reduced to half of what it was in the 4-needle lap.

Mr. Darby: I offer in evidence the drawing of the 2-needle lap suture.

(Marked Defendant's Exhibit O-1.)

Mr. Darby: I offer in evidence the fabrics produced by the witness.

(Marked Defendant's Exhibit P-1.)

The Witness: The attachment shown and described in the Schletter patent cannot produce the 2-needle lap structure of this exhibit. The defendant's attachment produces the 2-needle lap structure. The plaintiff's attachment produces the 2-needle lap structure. The plaintiff's attachment as illustrated in Plaintiff's Exhibit 33 is not capable of produc- [fol. 284] ing the 2-needle lap, because there are no undercut stops used and no means are shown to move them. In producing the 2-needle lap it is necessary to utilize undercut stops.

Q. Do the undercut stops in producing that type of laps operate the same way for the same purpose that the undercut stops of the Schletter patent in suit are employed?

A. They neither work the same way nor are there for the same purpose—neither.

I am shown a copy of Bitzer patent No. 1,938,207, granted to the plaintiff as assignee, December 5, 1933, on the application filed May 28, 1931. This patent shows and describes a form of mechanism that will produce a 2-needle lap suture. That is what the patent is directed to.

Mr. Darby: I will offer this in evidence which has been previously marked as Defendant's Exhibit E for identification.

(Defendant's Exhibit E for identification marked in evidence.)

The Witness: I am shown Plaintiff's Exhibit 17. Plaintiff's expert, Mr. Meyer, stated that the suture in his exhibit was a 4-needle lap suture. It is not a 4-needle lap suture. It is a 2-needle lap herringbone suture, because there are floats of yarn on the inside of the fabric that can only be produced by floating thread as is necessary in herringbone.

Q. I hand you what I believe to be all of the stockings and socks that have been offered in evidence by the plaintiff, and ask you if there is any one or more of them that could have been produced, in so far as its suture seam is concerned by [fol. 285] the attachment as shown and described in the Schletter patent in suit. Will you take them up one at the time and identify it by Exhibit number and say it could or could not, with your reason in each instance.

A. Plaintiff's Exhibit 23 is what I would call a window clock. That is, it is a design in which the fabric——

The Court: That is not the question as put to you.

Q. (Read.)

A. Exhibit 23 could not be produced, because there are no loops of yarn at the sutures. In other words, because it is not a herringbone split type of suture. Exhibit 22 could not have been produced for the reason that it is not a split fabric. It is a spliced clock sample.

Exhibit 5 could not have been produced because there are no floats at the split suture.

Exhibit 38 could not have been produced as there are no floats at the suture.

Exhibit 30 could not have been produced as there are no floats at the suture.

Exhibit G for identification could not have been produced as there are no floats on the suture.

Exhibit 4 could not have been produced as there are no floats at the suture.

Exhibit 27 could not have been produced as there are no floats at the suture.

Mr. Darby: May I at this time offer in evidence Defendant's Exhibit G for identification, which is one of the stockings produced by plaintiff's witness.

(Marked Exhibit G in evidence.)

[fol. 286] A. (Continued.) Exhibit No. 21 could not have been produced as it is not a split fabric.

Mr. Darby: First I offer in evidence the Schletter patent No. 1,752,206 which has been heretofore identified as Defendant's Exhibit F for identification.

(Defendant's Exhibit F for identification marked in evidence.)

Q. I call your attention to this patent which purports to be in part a continuation of the application for the patent in suit, and ask you to state very briefly in what particular respect does it differ from the patent in suit.

A. It uses one pattern chain instead of two and it uses a type of stop that is not undercut and which is not recurrringly operated.

Q. To what type of fabric is the patent directed, namely, is it the split fabric or spliced fabric?

A. It states that it can be used "for making clocks or split seam work," and so forth.

Q. I call your attention to Schletter patent No. 1,531,349, which is in evidence as Plaintiff's Exhibit 39, and particularly I call your attention to the designs and clocks shown in that patent. Will you state whether any of those designs could be made by the attachment shown in the Schletter patent in suit, and if so, which?

A. This patent appears to be drawn to the formation of a spliced clock and so could not be produced by the Schletter patent. If they were spliced clocks having reference

merely to the design, none of them could have been produced by the Schletter patent of the patent in suit. The designs shown in Figs 1, 2 and 3 could not have been produced be- [fol. 287] cause it is impossible with the Schletter attachment to change the outline of the pattern varyingly. That is, if, as is customary, the racking is over 2 needles in one part of the design it cannot be more than 2 needles or less than 2 needles in another part. The Figs. 1 and 2 further show the simultaneous production of high splices with clocks and I find nothing in Schletter to show how the mechanism shown in the Schletter patent is to be used to attain this end.

Further, more designs of the outline shown in all these figures would, were floating thread sutures such as described in the Schletter patent, hardly carry out the outline on account of the many loose threads and deformed stitches resulting when demands are made to make narrow designs in split fabrics.

Mr. Darby: I offer in evidence a certified copy of the file wrapper of the patent application of Schletter, filed March 12, 1921, Serial No. 451,785, "Improvement in certain stockings" appearing on page 23 et seq. of the Hofman record on appeal which has heretofore been marked for identification Defendant's Exhibit A *for identification.*

(Defendant's Exhibit A for identification marked in evidence.)

Q. I call your attention to the type of suture in the fabric illustrated in the application corresponding with the original Schletter application and ask you if you will first state what type of suture it is and state whether or not it could be made with the attachment as shown in the Schletter [fol. 288] patent in suit?

A. Referring to Fig. 1, I would say that the drawing does not represent any suture with which I am familiar. It has, however, one distinguishing feature with which I am familiar, and that is the floating feature which, even though the drawing is very poorly executed, shows clearly there is a float there. That float can only mean one thing, and that is it is intended to be a herringbone suture. I must say this one thing further, continuing that answer: It is also improperly shown, because from the fact that the enlarged fabric from the herringbone diagonal suture pre-

viously shown clearly indicates that a hole must be formed and such hole is not shown in this fabric.

In the absence of the hole in this fabric the fabric illustrated in this application could not be made by the Schletter attachment. In other words, a fabric without a hole could not be made by the Schletter attachment. Herringbone diagonals will have holes.

Q. Now I call your attention to the drawings of the patent in suit with particular reference to any additional equipment or, at least the rest of the knitting machine which is not illustrated. If you supplied the rest of the knitting machine to the attachment illustrated and shown and described in the Schletter patent, would the attachment shown there operate?

A. No.

There is no connection whatever between the attachment shown in the drawing and the rest of the knitting machine in so far as the operability of that attachment is concerned.

Mr. Darby: If I may excuse the witness for a minute, if [fol. 289] the Court please, I would like to put in evidence the prior uses and ask the witness one simple question in connection therewith.

The Court: If there is no objection it is all right.

(Witness withdrawn.)

Mr. Darby: I, of course, have no intention in the world of reading these depositions, but if the Court will permit I will very briefly synopsize them. If the plaintiffs take the same position that they took in the Hofman case there is no dispute as to the dates.

I offer in evidence under stipulation heretofore read into the record, the deposition of Elmer R. Roth, Paul Guenther, Frank Heyde, Frank Nobis and Max Gruener, with reference to so-called Gotham prior use.

Mr. Roth testified that he had been employed continually by a succession of mills, starting with the Paul Guenther, Inc., which was then taken over by the Onyx, which, in turn, was taken over by the Gotham Company. He entered their employ September, 1916. Mr. Heyde was the foreman at that time, and he was succeeded by Mr. Nobis who, in turn, was succeeded by Mr. Guenther. At the time he entered the employ of the company they had what was known as the

Richter machine, and the photographs of this machine were identified by the witness, which I will not stop to offer now, but will offer at the conclusion, because one of the original machines was produced in court. The machine was de- [fol. 290] scribed as a full-fashioned knitting machine with an attachment, the attachment consisting of a reversely-threaded spindle located in the approximate center of the machine, with automatic mechanism for racking the attachment in one direction from a pattern controlled chain of the knitting machine. It was provided with the lock which was described in plaintiff's prima facie case intended to lock the attachment when it was desired to prevent it from being operated.

On the respective threads of the spindle was located a nut so that when the spindle was turned the nuts would move towards each other or away from each other in accordance with the direction of rotation of the spindle. The ratchet for effecting this operation is shown near the center of the machine. This nut carried the stops which limited the stroke of the carrier rods. The attachment was used from the beginning of 1912 or 1913, and I understand there is no dispute as to the time.

Mr. Howson: Mr. Darby, please do not understand anything. You are probably right, but can not you leave it out rather than have it as an understanding?

Mr. Darby: All right. You raised no question in the other case.

Mr. Howson: I do not think I will now, but I don't want to be silenced by acquiescence.

I feel quite certain between you and me that we will not have any dispute on dates on that.

[fol. 291] Mr. Darby: All right. It was used, according to the testimony, from about 1912 or 1913 continuously up to about two or three years prior to the time it was produced in court, and it was used for making the so-called pointed heels. Due to the fact that in making the pointed heels you continuously racked only in one direction in the fabrication of the heel, that is the facing of the pointed heel did not require racking except in one direction,—the mechanism was provided with a handle for hand racking and putting them back to their original position for starting another stocking blank.

Then in operation the mechanism controlled by the cam of the machine would, in accordance with the pattern of the

chain effecting racking, to cause the nuts to move simultaneously toward each other.

The witnesses described these carrier rods extending the entire length of the machines on both sides, and the machine to which it was applied was the regular full-fashioned knitting machine. It was employed by them exclusively in the manufacture of stockings.

The witnesses likewise described in far more detail than I did the rest of the mechanism for effecting actuation.

The testimony of Mr. Paul Guenther was that he was employed with the Guenther Company since 1913, and he identified this particular instrumentality as one of the fourteen like it that had been in continuous use in that com- [fol. 292] pany since around the end of 1913. He testified that the machines were used in the normal production of their commercial stockings and these stockings so produced were sold. He corroborated the testimony of Mr. Roth as to their relation to each other.

Frank Heyde, who is the next succeeding foreman, was formerly with the company until 1918, and up to the time he left as foreman these fourteen machines were in commercial operation.

The next witness was Frank Nobis who testified substantially to the same effect. He was the foreman who succeeded Mr. Heyde.

Max Gruener went with Guenther in 1916 and he corroborated the other witnesses. He produced employment payroll records of the other witnesses who had testified; also produced invoices of particular stockings that had been manufactured and sold by this particular attachment. The various attachments are numbered, and this attachment was numbered 210, and the production records show the stockings still in the possession of the company that were manufactured under that particular number.

Under the stipulation I offer in evidence the exhibits referred to by these respective witnesses:

First, a set of five photographs of the attachment applied to the regular knitting machine.

(Marked Defendant's Exhibit Q-1.)

[fol. 293] Mr. Darby: I likewise offer in evidence the exhibit itself.

(Marked Defendant's Exhibit R-1.)

Mr. Darby: I offer in evidence a photographic copy of letter dated August 26, 1912, with invoices; record of employees service of Paul Guenther's and photographs taken from the files of the Paul Guenther Corporation as one exhibit.

(Marked Defendant's Exhibit S-1.)

Mr. Darby: I likewise offer in evidence a simplified perspective drawing of the attachment.

(Marked Defendant's Exhibit T-1.)

Mr. Darby: I also offer in evidence the stockings style 366 manufactured by Guenther with the attachment—that is, a commercial stocking.

(Marked Defendant's Exhibit U-1.)

Mr. Darby: There was a second prior use that I will be very brief with because it was, while there is a difference in structural details, the general principle is the same as the Gotham attachment, and it was used by the Julius Kayser Company in producing pointed heel stockings. They were the same in so far as it consisted of an attachment employing reversely-threaded spindles controlling stop ends and automatic mechanism for rotating it in one direction and manual means for rotating it in the opposite direction, and, as I say, they used it in making pointed heels.

The testimony of the witnesses which I will not review, even in the short detail that I did the Gotham attachment, [fol. 294] is to the effect that they had seventeen of those in operation from 1920 on.

I offer in evidence the testimony of Arthur W. Mutchler as contained in the record on appeal; Percy Hockin and Adolph Hecker, and the exhibits produced by those witnesses consisting of a set of photographs of the attachment in use for the full-fashioned knitting machine, photographs consisting of four in number.

(Marked Defendant's Exhibit V-1.)

Mr. Darby: I offer in evidence the employes' record cards and other documentary exhibits produced during those witness-s' testimony, consisting of six photographs, original documents.

(Marked Defendant's Exhibit W-1.)

Mr. Darby: I offer in evidence a simplified drawing of the Kayser attachment.

(Marked Defendant's Exhibit X-1.)

Mr. Darby: There was a third prior use known as the Nussbaum use. The Nussbaum Knitting Company had a flat knitting machine in which they knit sportwear, sweaters, bathing suits, and things of that kind, and it was equipped with narrowing mechanism at each end of the machine in the manner that has been described rather fully to your Honor, consisting of spindles oppositely threaded, but they were split from each other so that half was at each end of the machine. These spindles were used for narrowing and for no other purpose.

During the Summer of 1920 Nussbaum desired to produce [fol. 295] fabrics with designs between the selvage edges. They thereupon substituted fixed stops for the narrowing stops and had the narrowing spindle control thread carriers, and then automatically rotated these spindles in opposite directions according to the particular design designed to be produced, producing all different kinds of designs. That is what they call these swatches (exhibiting samples to the Court). This is a swatch showing the extreme. They are all varying designs that could be made. Likewise for plating or splicing, being one type of splicing where, in addition to the main body carrier you lay an additional thread, they wanted to plate bathing suits, one face would be of rayon, for example, and the other side would be of a different material.

Here is a set of swatches showing the plating and different combinations of plating.

The witnesses who were men familiar with machines utilizing the narrowing spindles for the purpose of producing designs of different splicing and what not were examined and they testified as to when it was done. They produced the pattern from which the fixed stops were made, the men who stopped it up and operated it and they also testified that prior to the trial representatives of the plaintiff too, to whom of course notice had been given of this prior use, had been over at their plant and they had been given just as full and complete information as we had. There is no [fol. 296] dispute that when they were using the reversely-threaded spindles for making design pattern work or plat-

ing that they were not simultaneously fashioning, because obviously they were using the fashioning spindles for the design and plating work and they therefore used unfashioned garments of the selvage edge.

So I offer in evidence under the testimony of these witnesses a folder containing ten photographs of the Nussbaum machines, with the attachment on it.

(Marked Defendant's Exhibit Y-1.)

Mr. Darby: I offer in evidence the depositions of Jacob Boch (under the stipulation, of course), Fred Drawert and Ferdinand Nussbaum, and as long as Mr. Howson has no objection, I will offer in evidence all the fabric exhibits that were offered in evidence under those depositions.

(Marked Defendant's Exhibit Z-1.)

Mr. Darby: I offer as one exhibit all of the documentary exhibits in the deposition.

(Marked Defendant's Exhibit X-2.)

Mr. Darby: And if it is agreeable to Mr. Howson, I will have the patterns, the physical exhibits, likewise included in Exhibit Z-1.

The Court: Very well.

Mr. Darby: I offer in evidence simplified drawing of the Nussbaum machine.

(Marked Defendant's Exhibit B-2.)

[fol. 297] The Witness: I am familiar with the Gotham and Kayser type of mechanism from a production point of view. This attachment as it stands could be utilized to manufacture any fabric, split or spliced only in one direction to the wale.

As to what is in the attachment which makes that possible, I will say that the two nuts that are capable of moving toward each other—the two screws are capable of turning together their respective nuts towards each other.

Q. In your last answer, did you take into consideration the fact that a pawl operated manually—I mean operated automatically under power by the machine—is provided for racking the spindle in one direction?

A. That is right, yes.

This attachment as it stands could not be utilized for making split or spliced fabrics of a design inclined at both directions to the wale.

This is because it would then have to rack the spindle—the spindle would then have to be able to be racked in both directions so the nuts could be moved toward each other and away from each other. That would require in addition to what is incorporated in this attachment a second ratchet and a pawl to operate it. It likewise would require selective mechanism to select which pawl was to remain operative. It likewise would require the necessary mechanism to actuate the machine.

Mr. Darby: I think I am about through with this witness, if the Court please, with the exception of two things: one is, the Grosser license. You will recall that was referred to in the plaintiff's testimony by the witness Thun who had [fol. 298] fabrics attached of which there were only photographs, and I wanted a chance and opportunity to examine the type of sutures in those fabrics. Mr. Howson advises me that that has not arrived as yet, but it will come. If I may have the privilege of recalling this witness when that fabric comes, to ask a few questions about it, and likewise we have set up on the same floor of this building a complete knitting machine, containing a number of sections with various prior art structures applied to it, so that we can, in the presence of the Court, knit samples of these various sutures showing just exactly what is necessary to accomplish, as well as what is necessary to avoid, and showing the operation of these various things that this witness has testified to, in actual practice. If the Court would permit us to adjourn to that room, we could probably run those tests now, or if the Court would prefer to start those tests in the morning, the cross examination of Mr. Miller could proceed now.

(Whereupon Court adjourned to Room 1242 of the Woolworth Building for demonstration tests.)

Mr. Darby: The first thing that will be done will be to use the Lieberknecht attachment with Schletter stops to show the direction of the dropstitches inclined to the wales, similar to Fig. 10 of the patent. This is the herringbone type of suture.

(Demonstration made.)

Mr. Darby: We will now show the production of what [fol. 299] has been referred to in the testimony as the two needle herringbone lap type of suture. This is all split work as distinguished from spliced.

(Demonstration made.)

Mr. Darby: I want to explain, your Honor, the adjustment necessary to be made by the mechanic was to set the carriers so they would have a lap. Up to this time they had the herringbone type. Now he is adjusting to the lap, in addition to the herringbone.

(Demonstration made.)

Mr. Darby: We will now show the defendant's commercial attachment in its normal operation, asking the Court particularly to notice the difference in purpose and operation of the end cut.

(Demonstration made.)

Mr. Darby: We will next show what will happen to the suture if the stops are not lifted in the two needle lap suture.

(Demonstration made.)

Mr. Darby: We are now going to produce a spliced clock from the mechanism which illustrates the Woodward patent. For two reasons. One reason is to show its production of a spliced clock and another reason is to show how control of the carrier rod at any part of the machine controls one or more sections when knitting.

(Demonstration made.)

[fol. 300] Max C. Miller, resumed the stand, and further testified as follows:

Direct examination (resumed).

By Mr. Darby:

Q. Counsel for the plaintiff produced the original Grosser license to which are attached some sample fabrics, Exhibits A and B, the license making it clear that the licensee was allowed to make the suture shown in Fig. A but was not allowed to make the suture in Fig. B, and the license

is dated December 18, 1930. Will you please refer to the fabric sample, Exhibit A, and state what type of suture is there shown. First is it split or spliced?

A. Split. A 2-needle lap type of split suture is shown. The Schletter structure as shown in the patent could not produce that type of suture. It would be hard to say how this particular sample was made.

Q. I mean with what equipment? Is it anything in evidence?

Mr. Howson: If the Court please, hadn't we better qualify the witness first and see if he knows?

A. That particular sample I do not know. To produce a 2-needle lap of that structure it would be necessary to have mechanism operating in principle the same as that illustrated in the Bitzer patent. That would make it.

Referring to Exhibit B, that is a split type of fabric. A herringbone type of suture is shown. This is the type of seam that Schletter described in the patent in suit as the [fol. 301] type he desired to make. In Exhibit B the suture is a straight suture. The Schletter patent could not make that type of suture inclined to the wales.

Referring to Exhibit A once more, to produce that particular structure you do not require a spindle racked in both ways. That is, automatically.

Cradle soles came in demand in the industry. I should say late in 1927; along about there.

Q. If there had been a demand for cradle soles prior to 1920, were there any attachments in the prior art that you have described in your testimony which could have been used for that purpose—prior to 1920?

A. Well, the prior art machines as shown in Lamb & Noon could have made it as also the Landenberger pin drum, or in fact any pin drum that had various projections on it against which the carriers can abut.

Any attachment that is capable of producing a cradle-foot can make any desired fancy design in the leg portion if desired.

Mr. Darby: That is all.

Cross-examination.

By Mr. Howson:

Q. Mr. Miller, will you please look at the drawing produced which is marked Defendant's Exhibit H. On that

drawing in connection with the views marked 5 and 6 I find a notation "Lamb, et al.," "Lamb, et al.," and so forth. What does that mean?

A. Lamb & Noon.

Q. Then in this summary these two sketches 5 and 6 refer to the Lamb & Noon patent?

A. That is correct.

Q. That is the Lamb & Noon patent which you referred [fol. 302] to and which is in evidence?

A. That is right. It is a single patent with two inventors.

Q. I will refer you to Defendant's Exhibit I, some photographs purporting to be photographs of a machine which I think you said that you had seen in 1935, is that correct? When did you first see that actual specific machine?

A. Some time this spring of 1935.

Q. And as to that particular machine any knowledge you have with reference to it, going back prior to 1935, was what was told to you by people who spoke to you?

A. No. In 1928 I was at Seifen & Donner in Germany, and they were the builders of that machine.

Q. Yes, but I am speaking now of the particular machine which you see photographed here.

A. Oh, that is all.

Q. And so far as the photographs go and the machine shown in the photographs any knowledge you have of that particular machine began in 1935, is that right?

A. Although Mr. Nussbaum offered to give me proof that he had been knitting on it in 1914.

Q. Yes, I know he told you a lot, but I want your personal knowledge.

Mr. Howson: In view of the answer of the witness, I wish to note a further objection and a notice of a motion to strike out all the testimony of the witness with reference to this exhibit, not only on the ground of the objection heretofore urged, but also on the ground that the machine has not been proved.

The Court: It may be allowed to stand subject to the objection.

[fol. 303] Q. Now, I want to ask you the question so we can be certain we understand each other: At page 330 of the typewritten record of your testimony you refer to the 4-needle lap split and you were asked the question:

"Q. Is the attachment shown and described in the Schletter patent able to make this type of suture?

"A. No."

You gave that answer, did you not, because, as you have read the drawings of the Schletter patent in suit, you understand that the undercut stops are intended to rock?

A. That is right.

Q. Now, at page 332 of the record of your testimony you made this statement:

"2-needle lap, although there may be attachments that still use 4 laps that have not been changed over."

is used in the art today—maybe you had better look exactly at the question and answer (handing testimony to witness).

The Court: The question was "What type of lap is employed in the art principally today?", and the answer is "2-needle lap, although there may be attachments that still use 4 laps that have not been changed over. But most of them, as far as I know, have changed over to 2-needle laps."

A. Yes.

Q. Now, I want to know what you really know about that.

A. I know of mills that had the pins fixed—with the fixed [fol. 304] pins, for instance, like you would use for splicing, you could make 4-needle laps, but when you have to make 2-needle laps you have to have the pins movable.

Q. You say you know of mills. How many mills?

A. Well, I saw a machine—what is the name of the mill where we went?

Mr. Walter Darby: Barnett Hosiery.

A. (Continuing.) Barnett.

Q. Any others?

A. No, that is the specific case I have in mind.

Q. How many mills are there in the country?

A. I think about 360.

Q. Do you happen to have any knowledge or information at all as to the attachments which are today being used by the Textile Machine Works, for instance, whether they are selling more of the 2-needle or——

A. No. I don't know that.

Q. You do not seem to have any real knowledge at all, do you?

A. Not in answer to the questions you gave me, no.

Q. I would not think so. Now you said this morning that you should say that the cradle-foot type of stocking was first introduced in 1927. What real knowledge have you about that?

A. Merely from various talks with mill people from time to time.

Q. Just sort of general information?

A. That is all.

Q. You would not be willing to fix it at any particular date?

A. Oh, no.

Q. Mr. Miller, I want to ask you to look at the patent drawing, Fig. 1. Now you testified that you could not under- [fol. 305] stand what was intended to be shown in this drawing by way of a device for operating the chain 70 from the camshaft, or to put it more specifically actuate the pawl 71 from the main camshaft.

A. That is right.

Q. At the time you made that answer you referred to the fact that you had a blurred copy of the drawing in your possession. Was it due to that that you could not understand it, or did you mean——

A. Oh, no. I have seen clear copies.

Q. Did you study that very carefully?

A. Oh, yes.

Q. Let us look at it. In the specification I find this:

"I preferably employ as shown, a second pattern chain 70, to which step-by-step movement is imparted by the operation of cam 35ª on a lever carrying the pawl 71 (Fig. 1) to impart movement to the ratchet wheel carrying the pattern chain aforesaid having studs 72 operating a spring-pressed lever * * *."

Now the pattern chain 70 is that which is shown in Fig. 2, the plan view, which is at the back part of the machine and is also shown quite clearly and designated in Fig. 1; is that correct?

A. That is right.

Q. Now, you also clearly see and understand what is referred to as the pawl 71 which is intended to operate that chain?

A. That is right.

Q. And that pawl it is perfectly clear to you, in operating that chain that pawl will have to be operated up and down the way any ordinary pawl is to move the chain; that is [fol. 306] correct?

A. I assume that, although there is not a ratchet on there.

Q. Oh, well now—all right, you will assume it. Now, you also understand, do you not, that the actuation is to be brought about by the cam 35ª?

A. No. That I am not clear on, Mr. Howson, because the cam 35ª is mentioned in the patent as being the operating cam, the companion cam to 34ª.

Q. Let me refer you again to the specifications which

"step by step movement is imparted by the operation of cam 35ª on a lever carrying the pawl 71."

That is what the patent itself says.

A. But it also says that 35ª is the operating cam for those rollers that go up and down. You see those other rollers?

Q. Yes, sure. It has the double function, but here it specifically says, regardless of what else it states, that the cam 35ª is intended to operate a lever to impart motion to pawl 71. There is no mistake about that, is there? That is plain English.

A. Well, as one skilled in the art the reason it is hard for me to believe that is because the cam 35ª that moves a member this way could at the same time move a member this way (illustrating), realizing that the cam must have a start from its hub it would be very difficult for me to conceive.

Q. But, Mr. Miller, forget all that. I am asking you if it is not plain from the language of the patent itself that what he said is this cam 35ª acts on a lever to impart motion to [fol. 307] pawl 71. Doesn't he say it?

A. I know, Mr. Howson, but do you mean to tell me that 35ª cam functions to move both the upper roller 31 and also to rack the chain? Is it the same cam?

Q. I will leave that to you. I am asking you whether it is not perfectly plainly stated in the specification that cam 35ª does actually operate on a lever to move pawl 71?

A. Well, the lever that is shown there could not be made to do that.

The Court: No. Just answer the question.

Q. Won't you answer the question?

A. Oh, you mean the language, yes.

Q. In Fig. 1 you see the bracket which is secured to the member 41 and you see this member which is also mounted on the bracket and extends to the right, to this post plainly shown in Fig. 1, which is mounted on the frame of member 2 and which is not lettered, you see that, do you not?

A. Yes, sir.

Q. And you see perfectly plainly, do you not, that if that member is pivoted to the bracket at the bracket which is shown there secured to the member 41 and has a third member to the left of that bracket and this longer member extended to the right, that must obviously be the lever that is referred to in the specification. Isn't that true? How can you doubt it?

A. I am again doubting it because of its lack of workability.

Q. We will come to the question of workability later.

A. It is the lever.

Q. That must be the member, isn't that so?

A. The only one that could possibly be.

[fol. 308] Q. Now, if you were not trying to misunderstand it, if you were trying to understand it——

A. I am not trying to quibble, Mr. Howson.

Q. Well, I guess I was getting excited at the time. I will put another question. Now we have got this far, that you see in Fig. 1 by looking at it as distinctly referred to in the specification, this member which is obviously a cam which is intended to be actuated by the cam 35ª; you see it perfectly plainly and it must extend to the right, as shown, isn't that so?

A. Exactly, Mr. Howson, but you notice you speak of the fulcrum of the lever, if it is the lever. This is a very confusing thing. You see this little pin that you call the fulcrum; what makes you say that is the fulcrum and this little pin that looks like it is not the fulcrum?

Q. Well, what do you think?

A. I am asking you.

Q. Tell me what you think about it? Maybe you better sit down.

A. If as you suggest the fulcrum is on the member 41, what is holding that up at the present time in that view; why doesn't it fall down? Mr. Howson, the trouble is——

Q. No, don't tell me what the trouble is, just answer the question.

A. What did you say?

Q. If you say that this bracket member is pivoted at 35 rather than at the point I direct your attention to, why doesn't it fall down; why is it standing in the position where you actually see it in the drawing?

A. Because it is only a drawing.

Q. I see. In other words, while the drawing shows it impossible to mean what you say, you think it may mean that because the drawing shows it in the position which it [fol. 309] could not be in if it was pivoted on that member and you are not sure that the draftsman intended to show it that way, is that it?

A. No. I meant that on the paper, you can indicate it on paper there any way you want and it won't fall off on the paper. You said it would fall down but I say it won't fall down on the paper.

Q. Is there anything shown in that drawing which supports it?

A. No.

Q. You are suggesting therefore that it is a lever, aren't you? You are suggesting the possibility that it is pivoted to the lever?

A. If it had two views, I could tell you what it was, but nobody can tell what it is with only one view of it.

Q. Well, we will pass that. Now then, assuming that you were trying to find out what lever the specification was referring to, and you knew from the drawing that if he meant that it was pivoted at the point you suggested on the member 41, that it would require some additional support for it that is not shown there, and therefore it cannot be pivoted, or it is probable that it is not pivoted there, then you would have to go to the other end of the lever and say that is the pivot then that he is referring to?

A. Let me see this. Even now, when I saw it on the model, up to that time I did not realize that that could possibly mean that that little right angled thing there was fastened to the lever. I often wondered what they meant by that right angled thing because it is not fastened to anything and because there was not a second view of it.

Q. I don't think you are trying very hard to understand it, but we will pass that. Now, assume, in view of what I [fol. 310] have said, that the pivot point is at the upper end

of the bracket and not on 41, then the specification obviously and evidently refers to that member pivoted, as the lever that is intended to be related to cam 35ª, is that correct?

A. Assuming that.

Q. You know, of course, that 41 is the member which is intended to be moved to the left to shift to put the mechanism in operation, and that shift to the left would move the end of that lever into the operative path of cam 35ª, don't you know that?

A. Yes.

Q. All right. Now, then, the only thing missing, if you are willing to go as far with me as I think you should in the assumption——

A. I want to, Mr. Howson.

Q. (Continuing.) The only thing missing in the whole patent is one thing, and that is this lever that we have been talking about is at the front of the machine and chain 72 and its pawl it has to be operated with is at the back of the machine?

A. Yes.

Q. That necessarily means, does it not, that in order for this lever to operate that pawl, you have got to have a connection from the front to the back of the machine so that when the lever operates it will rock the pawl, is that right?

A. Yes, you will have to have something like that.

Q. And you would not have much difficulty in putting it on if you went to do that job, would you?

A. Of course, I am an inventor.

Q. I see, you are highly skilled. All right, we will let it go at that. Mr. Witness, I want you to look at the model, and assuming that this member (I wish your Honor would see that), assuming this is the lever in front of the machine we are talking about and this is the pawl back there that [fol. 311] operates the chain 70 as you said, it needs a connection from this lever to the pawl so that it can work the pawl; don't you think that model is a perfectly fair illustration of what any mechanic would put on there if he wanted to follow that drawing?

A. Mr. Howson, that overhang right over here to draw the chain has bumps on it and has to do some work. Whenever you move a ratchet that has a chain on it you have to have relatively accurate piece of mechanism because the links of the chain are as short as possible so that the motion has to be quite accurate——

Q. We are not discussing the merits of this thing, we are discussing whether or not the manner in which the connection is made in the models between that front lever which is perfectly plainly shown in the drawing and the pawl which it has got to operate is not one way—one rather obvious way that a mechanic could make that operate?

A. I would not say it was a practical way. I am not trying to quibble. I just still don't see how this arrangement could work.

Q. You said that a great many times. What I am asking you now is about the connection. You said it is not practical. That does not mean that it would not operate, does it?

A. A construction like that in the full sized machine, would not operate.

Q. Are you sure?

A. Absolutely.

Q. Have you ever tried it?

A. No, but my knowledge of engineering certainly teaches me that. I think the leverage here, Mr. Howson, of one inch to about twelve——

Q. All right, as to that point, of course, in following the drawings, particularly patent drawings, if you had a lever [fol. 312] which showed a short end, which you thought would give you too much or too large a proportion, you would make it a little longer, and in doing that you would not be exercising your skill as an inventor as distinguished from a mechanic in doing that, would you?

A. As to this whole illustration of that rack and chain, until I saw it on here, I had no knowledge of what it was——

Q. Then, you had a sudden awakening and that was something you wanted to know. That is fine.

A. I was following the drawing, and that is all I had to go by.

Q. Of course, you had the specification, too. I want to come back to this connecting member. You say it won't work. You mean it won't operate, or do you mean it would not be practical and stand up?

A. I don't say that from this lever arrangement, that is not my main criticism.

Q. As far as that goes, the lever and connection would work all right, would they?

A. I said before that it would not work on a machine as it is here, but my main objection is something else.

Q. Let us get back to this objection. You say it won't work on a full-sized machine. It is quite important for us to know what you mean, whether it would not be operative at all or whether you think it would not work in a continuous practical sense?

A. I don't think any machine builder would ever put out a machine with that.

Q. You still won't answer what I asked you. I want to know whether it would work; have you any reason or opinion, and if so, will you state whether a thing made like that would or would not work?

A. It is offset too much. It would not work. The load is too great.

[fol. 313] Q. Then, you mean that the short end of the lever is too short for the long end? Is it your testimony that that would not operate at all?

A. Not as it is if it was put on a full sized machine. As to this model, yes, you can make this work.

Q. I am talking about a full sized machine made in that way. You say it would not operate at all?

A. What do you mean by "at all"? It would not move the chain as accurately as it must be moved.

Q. In other words, you could not make a stocking on it?

A. Well, if you do not move the chain step by step accurately, you cannot make a stocking.

Q. So you mean to testify, although you never have made a machine; never have tried it, that the connection if duplicated in a full sized machine would not actually work well enough to make a stocking, is that your testimony?

A. Absolutely not, with that offset. You have got a tremendous offset here and I don't see how you can get away from it. This (indicating) has to be in the back and this in the front.

Q. Mr. Miller, just to make it perfectly clear, you say you have not put up a full sized machine in your life?

A. No.

Q. And you have never seen it in a full sized machine?

A. No, I haven't seen this; this never has been built.

Q. So you are not speaking from actual knowledge or information, but just from your inventorship sense?

A. No, just engineering ability. That does not take invention.

Q. And it would not even make a stocking.

A. No.

[fol. 314] Q. And you are as clear on that as you are on your testimony all the way through here?

A. I don't know what other testimony you mean.

Q. Well, perhaps that wasn't a fair question.

A. That covers a lot of ground.

Q. You recognize the perspective view shown in Plaintiff's Exhibit 15 as substantially the same as the model, do you not?

A. Yes.

Q. In connection with the matter we have spoken of?

A. Yes.

Q. And it is your testimony, as I understand it, that by reason of this distance between the front and back, or the offset, as you refer to it, that you could not make a stocking on it if built into a full sized machine?

A. That is true.

Q. And you want to stick to that. All right, Mr. Darby, that is all.

Redirect examination.

By Mr. Darby:

The Witness: In my experience with knitting machines concerning which I have testified in my direct examination, I have never seen any mechanism employed in knitting machines like the mechanism consisting of the right angled bracket and the arm and this device, whatever it is which is undesignated and undescribed in the patent in suit, other than in the paragraph that Mr. Howson read to me. I have never seen any mechanism similar to that. They do not resemble in any respect any mechanism employed with any machines as I am familiar with them. From my experience with knitting machines, in the absence of a description thereof, I would not know from looking at this drawing what they are. I am puzzled over it. I will explain what [fol. 315] I meant by saying that they displaced cams of the chain 70 and the shaft 5. The cam shaft is in front of the machine; this chain mechanism must of necessity be on the back of the machine according to those drawings, so you have to reach from the back to the front somehow. As to what that means in practical terms in connection with the mechanism necessary for spanning that distance, I will say that you would have to put something in there to do it. It would have to be particularly rugged. That construction

that is used on the model and in the drawings is a mere solid piece of metal and there isn't any construction there that would actively move anything at the end of it from the center. The reason there is necessity for accuracy of movement, is as follows: Chains are fitted with bumps to operate such things. It is also desirable to make a chain as short as possible, so the links are made as short as possible and the bumps in many cases have to move relatively quite a lot so that between those different movements you finally end up with a chain motion that has to be relatively accurate. In the model that has been produced, the chain has been dispensed with and the bumps put right on the shaft itself, or collar of the shaft itself.

I was in the courtroom throughout the testimony of plaintiff's expert, Mr. Meyer, in which the subject of his present practices was covered. My testimony was concerning the present practices as stated in connection with Mr. Meyer's testimony.

Recross-examination.

By Mr. Howson:

Q. Mr. Miller, I suppose pawling mechanism for operating pawls from the cam in connection with full-fashioned [fol. 316] knitting machines are multitudinous, aren't they?

A. Yes.

Q. In endless variety?

A. Oh, yes.

Q. I dare say you, with your experience, if you wanted to provide a suitable mechanism for operating that pawl from the cam shaft, you could do better than what is shown in the drawing, could you?

A. The problem, Mr. Howson, is not just putting in that lever. I tried to say this before, but it is a question of timing. There aren't any cams shown there as to the timing relationship, when the chain must move in relation to the up and down motion that is associated in combination with cam 35[a] and another part.

Q. You always get away from the precise thing I am talking about. Suppose you have your cam 35[a] and you know that you are going to use that cam—let us assume that it is the only thing you are going to do with that cam to operate the pawl, would you have any difficulty whatever, you or any other person familiar with the mechanism and

the art, to put in a suitable connection to operate that pawl from cam 35?

A. I never just happened to have that problem come up. Perhaps I could do it, because I am skilled in the art.

Q. But you had a terrible time in figuring out what that was?

A. I actually did, Mr. Howson.

Mr. Howson: That is all, Mr. Miller.

[fol. 317] Louis Hirsch, called as a witness on behalf of defendant, being first duly sworn, testified as follows:

Direct examination.

By Mr. Darby:

The Witness: I reside at 41 Clifton Terrace, Weehawken, New Jersey. I am President and General Manager of Louis Hirsch Textile Machines, the defendant in this action. I have been serving in that capacity with the defendant corporation since its formation in 1928. I was formerly manager of L. Hirsch, Inc., that was in 1910. I have been with them since then, ever since 1910. My company is engaged in the business of selling, importing and manufacturing full fashioned hosiery machines, parts and attachments. Our business includes importing foreign made machines as well as manufacturing knitting machines in this country. We import the Karl Lieberknecht, the Kalio full-fashioned machines of foreign make. I am familiar with the attachments sold by our company, concerning which we are charged with infringement in this case. We began to sell those attachments in 1927. The first attachments that we sold were imported by us from Germany. We do not still import them from Germany. We make them here. As to whether there is any substantial difference in the prices of the attachment for a knitting machine and the knitting machines themselves, I will say that the price of the knitting machine is $9,000 to $10,000, and the price of the attachment $350. I am personally familiar with the circumstances under which we first purchased or obtained from abroad [fol. 318] the attachment that is charged to be an infringement.

In the Summer of 1927, Mr. Lieberknecht personally and Mr. Frank L. Chipman, at that time president of Charles Chipman Company, and also a stockholder of the Rosedale Knitting Company, and I, met in Reading, Pennsylvania, and Mr. Chipman expressed the desire to have an attachment built for him which was capable of making a split suture all along the side of the stocking and ending with a so-called pointed heel. Mr. Chipman and Mr. Lieberknecht and I went into details. We ordered an attachment capable of producing a fabric of that nature from Carl Lieberknecht. We did that in the ordinary course of business and in March, 1928, Mr. Lieberknecht sent over an attachment.

Q. Have you a copy of your order in German, and a translation thereof?

Mr. Darby: You do not object to a photostatic copy, do you, Mr. Howson?

Mr. Howson: No.

(Document handed to the witness.)

A. That is another order.

Q. All right, tell me about that order. This is dated October 24, 1927.

A. One of our customers, the Minisso Company of Philadelphia, sent us an order to make designs as per the sketch, which is also attached to this copy of the order. That is a photostatic copy of the order, taken from the official records of my company. That is a translation of it.

At the time we placed this order, we had not heard of any Schletter attachments. We did not know of any Schletter attachment.

[fol. 319] Q. When you placed this order with Carl Lieberknecht, how much time elapsed between the time of placing the order on October 24, 1927, and the time when the machine was received?

A. Eight or nine months.

Mr. Darby: I offer the order and translation in evidence.

The Witness: You asked me about the Rosedale attachment, that is another one.

Q. All right, go ahead with the Rosedale attachment?

A. Eight or nine months, because it was an entirely new attachment to be developed.

(Marked Defendant's Exhibit C-2.)

Q. So that you had on order with Lieberknecht an attachment for the Rosedale as well as an attachment for the Minisso Company?

A. Yes, sir.

As to which attachment was received first, I will say that I would have to refresh my memory on that. The Minisso attachment was delivered on September 27, 1927, and some more attachments were delivered on March 14, 1928. Those attachments were all for variable split attachments which means deep lining for increasing the distance from the selvage. They were of the reversely-threaded spindle type that is here in court under charge of infringement. They were the same in all respects then as you first received them as they are today as you sell them. There may be some very minor changes. Insofar as the reversely-threaded spindle, they were the same. Insofar as the stops capable of producing two-needle laps were concerned, they [fol. 320] were the same. Insofar as the stop control mechanism is concerned, they were the same. Insofar as they used a single chain instead of a double chain, they were the same. The Rosedale attachment was delivered on March 12, because this was an entirely different attachment, which had many features on it which the others did not have.

Q. The Rosedale attachment of March 12, 1928,—you have a photographic copy of the original invoice of that which you produced?

A. Yes.

Mr. Darby: I offer the photographic copy of the original invoice in evidence.

(Marked Defendant's Exhibit D-2.)

Q. And have you continuously imported or made here the attachments similar, so far as those details I spoke of a few minutes ago, since that time continuously from them?

A. They have delivered some attachments since then.

Cradle soles first came into demand in the industry somewheres around 1927, the latter part. As to whether there was any connection between the use of cradle soles in the industry and the demand for our attachment, I will say that the industry developed the salability of cradle sole stockings because of their going hand in hand with the style of shoes coming in. That means low shoes with very

low heels, and the endeavor of the hosiery manufacturers was to create stockings which would synchronize or which would go with those shoes; that is what created the big demand for cradle soles since 1927 because the shoes were very low and the reinforcement which was heretofore employed in manufacturing hosiery was too wide or too [fol. 321] clumsy and showed a way on top of the shoes, which was a very objectionable feature and they only could overcome that by reducing the sole portion and also forming the sole portion according to the form of the shoe.

The attachment that we obtained from Lieberknecht in response to Minisso and Rosedale's requests was not created for the purpose of cradle soles. At that time it was too early. It was not in demand. But that attachment has since been used in the manufacture of cradle soles.

As to whether during the time we supplied knitting machines from 1910 on we supplied machines with long and short nose sinkers, I will say that we did supply machines which had long and short nose sinkers only there where split was formed, and inasmuch as split sole was only used in suede lines the long and short nose sinkers were only in that very small area. I mean to cover the distance of about 4 or 6 needles. Since 1928 we have not supplied any machines with long and short nose sinkers.

I can state my familiarity with what is done in the industry. I am connected with the knitting industry since 1888, in part directing manufacture, in part developing styles, in part quality, and I have kept in constant touch with hosiery and knit goods and therefore I have to have a rather intimate knowledge of the machines and of the things the machines can do in order to help develop the industry.

I have personal contact with the various knitting concerns in the United States as part of my regular duties. I keep advised as to what they are doing and how they are doing it, [fol. 322] and they come to me in many instances to ask me as to whether a certain style or articles could be made and in order to answer correctly I have to have knowledge of the machine and what the machine can do.

Based on my knowledge thus obtained I will state that I have not seen the long and short nose sinkers used in the manufacture of commercial hosiery products since 1928. It has not been used because the formation of the split as it is used since 1928 does not need long and short nose

sinkers. When I say "the formation of splits," I am referring to the herringbone type of split. They have eliminated the herringbone type of split.

Mr. Darby: That is all.

Cross-examination.

By Mr. Howson:

The Witness: I would not say that I have any personal knowledge of what the practice of the Textile Machine Works, the plaintiff in this case, has been since 1928 in the matter of supplying long and short nose sinkers, because I did not see all the attachments and I did not see all the machines. I only can rely upon what I am told as far as their products are concerned.

What I was saying in my direct examination about long and short nose sinkers has particular reference to our own machines.

In the Hofman case I think I testified that it was this order of March 12, 1928, which was the order for the first attachment that we made.

Q. On this order which was received March 12, 1928.

[fol. 323] A. Was it the attachment for making the split?

Q. That was an order for the Rosedale Knitting Company.

A. Rosedale Knitting Company?

Q. They are located at Reading.

A. Reading, Pennsylvania. That is where the plaintiff is located. Mr. Lieberknecht was in this country at that time. He was there at Reading off and on. He came over twice a year. I cannot recall how long he had been up there at that time. It is quite customary for me and other knitting machine manufacturers to keep fully and promptly informed as to all machines and attachments, and so forth.

I personally had nothing to do with the designing of the attachment; that was left to Karl Lieberknecht. I only pointed out the articles that were to be manufactured. As to whether it was customary at that time for Lieberknecht to have his own fixers in this country to install machines in the different mills, I will say that we had a staff of erectors and mechanics who partly originated from Germany but who were constantly in our service, but they had no connection with the factory over in Germany. They may have been in constant touch with the factory, I do not know.

Only then privately, not officially. I not only testified in the previous suit but I was present during the trial and assisted Mr. Darby in the trial to a certain extent. I testified there that it was our purpose to contribute to the defense of that case. Hofman is doing the same thing here at this trial. His representative, Mr. Weinberg, has been here. We are each helping the other out.

I was talking about low shoes and cradle foot stockings. [fol. 324] As to whether the manufacturer of shoes and the manufacturer of stockings to fit the shoes or suit the shoes work pretty much hand in hand, I would say they follow each other very closely. The manufacturer of hosiery follows the trend of the shoe styles very closely.

As to whether the hosiery manufacturer would not make a stocking unless he could make a shoe that it would go with, and the shoe manufacturer certainly would not make the shoe unless suitable hosiery was going to be available for it, I would not go as far as to say all that. The shoe manufacturers come out first and the hosiery manufacturers follow suit with their products to conform with the style of shoes.

As to whether hosiery manufacturers, or the hosiery industry, permit the shoe manufacturer to tell them what kind of stockings to make, I will say that the shoe manufacturer is not concerned about any kind of stockings. He does not come to the hosiery manufacturer and point out what the hosiery manufacturer can do for him. He does not care, to my knowledge, and according to my personal experience, I would not find any reason to say that does not frequently occur in the experience of others, because I do not see any reason.

Q. Until you brought out this attachment which you say you obtained on this order in 1928——.

A. 1927. The order was placed in 1927 and the machine received in 1928. Prior to that time we had been selling the Karl Lieberknecht knitting machines since 1912.

On the Karl Lieberknecht machines that we were selling prior to 1927, there was no attachment which included re- [fol. 325] versely-threaded spindle with automatic means for operating it in both directions for making any such designs as our customers asked us for in 1927.

Karl Lieberknecht, for whom we sold, was not furnishing in America on his machines any other attachment for

doing that kind of work; the kind of work we are interested in here, leaving out of consideration the old one-way pointex attachment.

The attachments which we first commenced to obtain in 1928,—the first order in 1927—have become standard on our Karl Lieberknecht machines.

Q. And do you consider them important to the full-fashioned knitting machines?

A. These or any other attachments for the same purpose in order to create a certain style of stockings.

Q. But do you agree that an attachment such as that which is involved in this suit for doing that work is really essential to the machine today unless some other attachment could be found for doing the same work?

A. I would consider simply an improved well known attachment which has a wider range——

Mr. Howson: I object, if the Court please. He is not responsive to the question.

The Court: Answer the question put to you, Mr. Witness and we will progress more rapidly.

Q. (Read.)

A. I would have to answer yes and no.

The Court: Yes.

[fol. 326] The Witness: Yes. An attachment creating that style is essential.

In my deposition in the Hofman case I said:

"As to the Karl Lieberknecht machines at present we equip all of them with that attachment, because the style demands that kind of construction of the stocking. For the present it would be hard to sell a full-fashioned machine without an attachment of that kind."

I agree to that.

Mr. Howson: That is all.

Redirect examination.

By Mr. Darby:

The Witness: We did not have any demand for an attachment capable of making reverse designs prior to this request from Minisso and Rosedale.

Our first attachment was capable of making the 2-needle lap suture. As to whether I was familiar with the attachment, or became familiar with the attachment sold by the plaintiff company, the Textile Machine Works, I will say that I am not mechanic enough to judge that. I only know what they can produce; not the way they are constructed.

Q. But from the terms of their production were the attachments of the plaintiff company that you first became familiar with capable of producing a 2-needle lap suture?

A. I could not answer that.

Mr. Darby: That is all.

(Witness excused.)

[fol. 327] ALFRED FRIEDMAN, called as a witness on behalf of the defendant, being duly sworn, testified as follows:

Direct examination.

By Mr. Darby:

I reside at 936 Franklin, Wyomissing, Pennsylvania. I am a sales engineer employed by Louis Hirsch Textiles, since 1925. I have been connected with the knitting industry all told, at least sixteen years.

I am familiar with the attachment made and sold by the defendant and here charged to constitute an infringement. I have been familiar with it since it was first received in the United States. I am familiar with the attachments that have been made and sold by the plaintiff in competition with our attachments. The attachment of the defendant is capable of producing a 2-needle lap suture. I am familiar with the type of suture produced by the competitive attachment first put out by the plaintiff company. It made a 4-needle lap split seam.

To my knowledge, the defendant company first produced a structure capable of producing a 2-needle lap in an attachment which was delivered to the Rosedale Knitting Company in March, 1928. I first became familiar with a machine or attachment built by the plaintiff company that was capable of producing a 2-needle lap, at least three years thereafter. It was after March, 1928. Prior to that time the attachments that I had seen of the plaintiffs were of the 4-needle lap type. I personally supervised the erection

of the machine that was demonstrated to the Court as part [fol. 328] of the trial yesterday. I am familiar with its entire structure and setup and operation.

Mr. Darby: I state to the Court that I am merely qualifying this witness in case there is any cross-examination which counsel may care to make on that demonstration yesterday. That is all.

Mr. Howson: No cross-examination.

(Witness excused.)

Mr. Darby: I offer in evidence the exhibit which has heretofore been marked Defendant's Exhibit B for identification during the plaintiff's side of the case.

Mr. Howson: I object to it as irrelevant.

The Court: Received subject to the objection.

(Defendant's Exhibit B for identification marked in evidence.)

Mr. Darby: I offer in evidence Defendant's Exhibit C for identification which was marked for identification during the plaintiff's side of the case.

Mr. Howson: Same objection.

The Court: Same ruling.

(Defendant's Exhibit C for identification marked in evidence.)

[fol. 329] Carl E. Weinberg, called as a witness on behalf of the defendant, being first duly sworn, testified as follows:

Direct examination.

By Mr. Darby:

I reside at Weehawken, New Jersey. I am secretary and general manager of Alfred Hofmann, Inc. That is the defendant in what has been here referred to as the New Jersey trial. It was a New Jersey trial but it was a Delaware corporation. In other words it was a Delaware corporation that was defendant in the New Jersey trial.

Our company does not manufacture the Hofmann attachment, or what has been referred to here as the Hoffmann attachment, charged to be and held to be an infringement.

That is imported from Schubert & Salzer in Germany. Our company imports the Schubert & Selzer knitting machines. We do not manufacture either the knitting machines or the attachments in the United States. We manufacture certain attachments, but not that particular one.

There is a substantial differentiation between the price of knitting machines and the attachments that we sell, referring to that particular attachment, of course. I can approximate what it is. Whereas the full-fashioned knitting machine, which today usually consists of 24 sections and is probably a 45-gauge machine, would sell around $9,500 to $10,000, the attachment here involved sells for around $350. I am familiar with the circumstances under which my company first acquired an attachment of this nature from Schubert & Selzer.

[fol. 330] The first attachments of the type here concerned were single motion attachments. In other words, attachments where the reverse motion was not supplied. That type was first supplied to Paul Guenther in Dover as per an order of October 27, 1922. The first attachment with reverse motion was one which was supplied to a company called the Waldensian Hosiery Mills of Valdez, North Carolina, against an order taken on May 28, 1928. That order called for two attachments, one of which was delivered about August, 1928, and the other about January, 1929.

The circumstances that occasioned our ordering an attachment with reverse movement were as follows: At the time of ordering this attachment there had come into vogue a style called cradle-foot. This style was the outcome of a toe reinforcement which was called the "offset" foot. That was a double step. That double step was more or less unsightly, and therefore manufacturers began to create stockings with a more gradual reinforcement called the cradle foot. This particular customer submitted to us a sample of such a stocking and asked us if we could furnish such an attachment to make such a stocking. We told him that we thought we could, and we corresponded with Schubert & Selzer in this respect.

The attachment which we received with single motion attachment was not satisfactory, whereupon we corresponded further with Schubert & Selzer and told them that that was not what we expected. They wrote us a letter on June 6, 1928, which in translation, reads as follows:

"In the meantime we have also received your letter, No. [fol. 331] 324, of May 17th, and from the contents of this letter it appears to us that there is a misunderstanding concerning the functions of the pointed heel attachment which should be clarified immediately. If today on the strength of the sample which you sent us you declare that no double pointed heel but you understood a zig-zag pointed heel, we can only reply thereto that previously you never gave us any intimation of such an interpretation so far as this attachment is concerned. When we have spoken of double pointed heels we have had reference to a heel consisting of two pyramids or two points, which the name of the attachment itself already expresses, but never have you or we made any reference that with this attachment zig-zag designs should be worked. These zig-zag designs of course can be made without pointed heel attachment only. In that case the attachment must be arranged accordingly so that it can be worked forward and backward. Whether it is desired to work one or two points is of no consequence and whether pointed heel attachment operates with spindles, and we think you can work any desired zig-zag pattern. Naturally the movement cannot be over four needles."

Therefore, thereafter we received the attachment for this particular company, made delivery of it and installed it. The records showing the order for that attachment was introduced in the record in the Jersey suit. The order [fol. 332] form is shown on page 571 of the record in the Hofmann case.

Mr. Darby: I offer the order form in evidence.

That is the order for this particular attachment.

(Marked Defendant's Exhibit E-2.)

I have made a drawing illustrating the toe construction that I testified about. This is the toe construction prior to the introduction of the so-called cradle-foot, known as the offset toe. This is the offset toe. I diagrammed this here in the court room for the purpose of my testimony.

Mr. Darby: I offer it in evidence to illustrate the witness' testimony.

(Marked Defendant's Exhibit F-2.)

At the time we received this request for the attachment from this mill we had not heard of any such thing as the Schletter attachment. We had not seen any attachment on the market of the reversely-threaded automatically actuated spindle. We had not heard of Schletter at all in connection with attachments of this nature. I knew Schletter, but not in this connection. We had not seen or heard of any reverse motion attachment that was being put out by the plaintiff company at that time capable of doing this work. That is, the attachment represented in the Schletter patent.

Mr. Darby: That is all.

[fol. 333] Cross-examination.

By Mr. Howson:

Q. Where is the letter?

A. (Witness hands paper to Mr. Howson.)

Mr. Howson: You have no objection to putting this entire letter in evidence, have you?

Mr. Darby: No.

Mr. Howson: You just read part of it.

The Witness: Yes.

Mr. Darby: I have no objection at all. That is not a letter. It is excerpts from cables and letters. I have no objection to putting it in.

By Mr. Howson:

The Witness: Schubert & Salzer is a very substantial concern. It is one of the largest knitting machine manufacturers in the world. My concern has represented them in this country since 1911, and we have sold full-fashioned knitting machines since 1920.

Q. And prior to 1920 did Schubert & Salzer furnish for this country an attachment for doing any of the work that can be done by the attachment of the patent in suit; I refer to insert clocks, reinforcements at the selvage running in two directions, and so forth?

A. I could not testify to anything that happened before 1920, Mr. Howson, except from my general information I know that they did not.

Answering the question from 1920 on up to the time we brought out our attachment, I will say—No.

[fol. 334] If any other device or attachment capable of doing the work involved in the attachment in this country was put out by Schubert & Salzer, I do not know it.

It is correct that when we furnished the first attachment which was involved in the Hofmann suit, and held there to be an infringement we ourselves had nothing to do with the designing of the attachment. We simply sent the order to our principal, Schubert & Salzer, and they supplied the attachment.

At that time Schubert & Salzer were sending their own mechanics to this country. These mechanics were in our employ. But it was their function to go to the different mills and install and fix the Schubert & Salzer machinery. Wherever we had sold machinery these mechanics would install the machinery.

The Hofmann attachment, the one involved in the Hofmann suit became standard equipment on the Schubert & Salzer machine which we were selling, up to the time where the plaintiff sued the Delaware corporation—to that date. It was regularly furnished until that date with all the machines.

Q. From the time that you began to get them, when you ordered this first one?

A. It was.

Mr. Howson: That is all.

Redirect examination.

By Mr. Darby:

The Witness: It is correct that I said on cross examination, that prior to the time that we ordered the first reverse motion attachment, we did not sell any attachment that was [fol. 335] capable of making the designs that the reversely-threaded attachment was capable of making.

We did not have any demand for any attachment which would make this type of designs up to that time.

(Witness excused.)

Mr. Darby: I offer in evidence page 186-31 of plaintiff's catalogue of 1930, which has heretofore been marked Defendant's Exhibit D for identification.

(Defendant's Exhibit D for identification marked in evidence.)

Mr. Darby: If the Court please, defendant rests.

Mr. Howson: If the Court please, there is just one little matter I want to make a comment on, just by way of reserving a right if we have any. One of the defenses in this case set up by the defendant's answer and included in their particulars, is an alleged prior knowledge and use in Philadelphia at a mill called the Torresdale Hosiery Mills. Mr. Darby in his opening did not refer to that defense, but I asked him whether or not they were going to rely on it and he said he was not sure at that time, and later he told me not, in accordance with his promise. But by reason of that defense and by reason that it was included in the particulars, the plaintiff went to a very great expense in preparing to meet that defense. I just want to make a note on the record at this time that before the case is over we will wish to present [fol. 336] to the Court the question whether or not under the circumstances we ought to have special costs or expenses in connection with that particular defense. I do not understand that the statute requires us to thresh that out now, and I suppose it can better be done at a later time.

The Court: You want the record to show that what rights you have in that respect are not waived at this time.

Mr. Howson: Yes, sir.

The Court: The record may so show.

Plaintiff's Rebuttal Proofs

Mr. Shaw: If your Honor please, in accordance with the stipulation I want to offer certain depositions in the Hofmann case.

I offer the testimony of Sidney Mayer, which is found in the Hofmann record at pages 317 to 319. During the testimony of Mr. Mayer he referred to an exhibit in the Hofmann case known as Plaintiff's Exhibit 8, and this exhibit corresponds to Plaintiff's Exhibit 17 in this case.

I offer in evidence a stocking which was marked in the Hofmann case as Plaintiff's Exhibit 35, and ask to have it marked in this case as Plaintiff's Exhibit 40.

(Marked Plaintiff's Exhibit 40.)

Mr. Shaw: I also offer the testimony of Floyd E. Groff, which appears in the Hofmann record at pages 319 and 320. [fol. 337] The witness Groff produced photographs Nos.

2329 to 2333 inclusive, dated March 21, 1921, which were in evidence in the Hofmann case as Plaintiff's Exhibit 34, and I ask to have them marked in this case as Plaintiff's Exhibit 41.

(Marked Plaintiff's Exhibit 41.)

Mr. Shaw: The same witness also produced a photostatic index of the photographs taken by him and I offer it in this case as Plaintiff's Exhibit 42. It was Hofmann's Exhibit 36.

(Marked Plaintiff's Exhibit 42.)

Mr. Shaw: I offer the deposition of William J. Jackson, which appears in the Hofmann record at pages 320 to 337. During the deposition of Mr. Jackson certain letters between his firm and the Textile Machine Works and W. G. & D. M. Stewart were produced and offered in the Hofmann case as one exhibit, No. 38. I ask to have that marked in this case as Plaintiff's Exhibit 43.

(Marked Plaintiff's Exhibit 43.)

Mr. Shaw: I offer the testimony of Walter G. Stewart, which appears in the Hofmann record, pages 344 to 364. During the testimony of Mr. Stewart the certified copy of the abandoned application of Schletter, filed March 12, 1921, serial No. 451,785 was referred to and offered in evidence as Hofmann Exhibit 40. It is already in evidence in this case as Defendant's Exhibit A.

I offer in evidence a stocking blank produced by the wit- [fol. 338] ness Stewart. This stocking blank was Exhibit 41 in the Hofmann case, and I ask to have it marked in this case as Plaintiff's Exhibit 44.

(Marked Plaintiff's Exhibit 44.)

Mr. Shaw: Witness Stewart also produced a letter written by him to Mr. Schletter, dated July 28, 1924. This was Hofmann Exhibit 42, and I ask to have it marked in this case Exhibit 45.

(Marked Plaintiff's Exhibit 45.)

Mr. Shaw: A design patent No. 63,272 of November 13, 1923, was also referred to by the witness Stewart and was in the Hofmann case as Exhibit 49. I ask to have it marked in this case as Plaintiff's Exhibit 46.

(Marked Plaintiff's Exhibit 46.)

Mr. Shaw: If your Honor please, those are depositions that dealt with the defense of abandonment, and the question of date of invention of Schletter. The question of abandonment in the testimony of Jackson and Stewart shows that the original application was abandoned through a mistake in Mr. Stewart's office and that Mr. Schletter was not advised of it. As soon as he learned that the application had become abandoned, he directed, through Jackson, the filing of a new application which was taken up by Jackson and the application for the patent in suit was then filed.

On the question of the date of Schletter's invention the witness Stewart testified that Mr. Mayer of the Textile Machine Works brought Mr. Schletter to him I think it was on [fol. 339] February 11, 1921, the notation being written in the record from Mr. Stewart's diary and Mr. Stewart testified at that time the attachment and the stocking in which Mr. Schletter was interested were discussed. Mr. Stewart produced this stocking blank, now Plaintiff's Exhibit 44, and testified that that stocking blank was received at the date of the first conference and remained in his file up until the time it was produced at the trial in Trenton.

Alfred E. Ischinger, called as a witness on behalf of the plaintiff in rebuttal, being first duly sworn, testified as follows:

Direct examination.

By Mr. Shaw:

The Witness: My name is Alfred E. Ischinger; age, 36 years; residence, Mt. Penn, Pennsylvania, and during the last seven years I have been in charge of the patent department of the Textile Machine Works, the plaintiff in this case.

I visited the Brentmore Knitting Mills on November 3, 1931. I went there for the purpose of seeing an attachment which was on a so-called Reading type knitting machine located at this mill. I saw and examined that attachment, and had photographs made of it. That attachment was on a full-fashioned hosiery machine of the Reading make. I produce the photographs which I took at that time. These [fol. 340] are the seven photographs that were made of this attachment at the Brentmore Hosiery Mills at that time.

Mr. Shaw: Witness produces photographs 8222 to 8229 inclusive, dated November 3, 1931. I ask to have these photographs marked in evidence as Plaintiff's Exhibit 47.

(Marked Plaintiff's Exhibit 47.)

The Witness: These photographs were produced in the Hofmann trial. There have been no changes made in the photographs whatsoever, since that trial. There are certain notations of numerals in ink on the photographs. These are the same as they were in the Hofmann trial with one exception. That exception is as follows: In photograph numbers 8228 and 8229 the letter K has been substituted for the reference numeral 16. The reference numeral 16 has been crossed out on these photographs and the letter K substituted. The numerals on these photographs correspond with the reference numerals of the patent drawings in the Schletter patent here in suit. I will take those photographs and read into the record the various elements with the attachments shown therein. Referring to photograph 8222, the reversely-threaded spindle is marked 11. The nuts on the reversely-threaded portions of the spindle are marked 9. The spindle bearings are marked 12. The two ratchets for rotating the reversely-threaded spindle in opposite directions are marked 21 and 22 respectively, and there is also shown on this photograph a hand-operated mechanism for [fol. 341] turning the reversely-threaded spindle 11, and this mechanism includes an upper chain sprocket marked D, and also chain sprocket marked H and chain G and support for the upper chain sprocket marked F and a crank marked E for rotating the upper chain sprocket. There is also shown a spindle index wheel here marked C. This letter I might note does not correspond with the designation on the patent drawings of the Schletter patent. The part here marked C is marked 25^1 in Fig. 3 of the Schletter patent drawings. 25^1 in Fig. 3 of Schletter patent drawings. In addition there is also shown a mounting marked B in the photograph which mounting is provided for a spring pressed plunger that co-operates with the index wheel C and which plunger is marked 26^1 in Fig. 3 of the patent drawings.

I notice that the numeral 6 is applied in the photograph to the yarn carrier bars of the knitting machine.

In photograph 8223 there is shown the reversely-threaded spindle 11, the nuts 9, the spindle bearings 12, the thread

carrier bar 6, the hand operated mechanism for turning the spindle including the mounting for the upper sprocket wheel marked F, the upper sprocket wheel itself marked D. The crank handle for the upper sprocket wheel marked E, the sprocket chain marked G; the lower sprocket wheel H; the mounting for the spring pressed plunger that co-operates with the index wheel marked D, the index wheel C and the thread carrier bar 6.

Photograph 8224 shows the reversely-threaded spindle 11, the nuts 9; one of the ratchets 21; the spindle shaft 20, and [fol. 342] a lever 29a and a cam follower on the side of lever marked 31; also the hand operated mechanism including the mounting for the upper sprocket wheel F and the upper sprocket wheel D and the chain G; the lower sprocket wheel H and the crank handle E.

Q. May I interrupt, Mr. Ischinger, to suggest that if in the following photographs the same parts are shown and a letter correspondingly, that you just go through the remaining photographs and point out the parts not shown on those which you think you have so far described?

A. All the parts as pointed out are substantially shown in photograph 8225. Some of the parts previously mentioned are shown in photograph 8226.

Some of the parts are shown in photograph 8227. In this photograph there is also shown a number not previously mentioned, namely, a stop J for the lever 29a. There is also shown a concentric disc 35 on the cam shaft of the machine and a cam 35a.

In addition to this, I believe that the cam follower 31 was not previously mentioned which cam follower and cam 33 are connected with the lever 29a.

In photograph 8228 there is shown a hook-arm K which was not previously mentioned, also a lever 29.

The last photograph No. 8229 again shows the hook-on K and in this picture the hook-arm is clearly shown as connected to a lever 15 not previously mentioned.

Also cam 14, which cam 14 corresponds with cam 14 shown in the patent drawing.

[fol. 343] Q. Can you state from those last two photographs which you have examined, whether they show that the hook-on K to which you have referred is connected to the lever 15 of the patent?

A. Photograph 8229 clearly shows that the hook-arm is bifurcated at its lower end and is connected with the ends of the lever 15, which lever, as I previously mentioned, is the same lever as the one designated by the reference numeral 15 in the patent drawings.

Q. When you examined that patent attachment at Brentmore and took the photographs, it was apparent, wasn't it, that certain parts were not there?

A. Yes, sir.

Mr. Shaw: You may cross examine.

Cross-examination.

By Mr. Darby:

The Witness: I testified in the Hofmann case in connection with these photographs and the Brentmore machine. As to whether the time that I had gone to the Brentmore plant was approximately within six months of the date of the trial in that case, I will say that I do not recall off-hand just when the trial took place. When I stated in the Hofmann trial that I went to the Brentmore within the last six months to examine the attachment that was there, I believe I had reference to one of my first visits there. That was not the time that these photographs were made. The photographs were made subsequent to that time. They were made November 3, 1931. As to whether the machine was in inoperative condition when I arrived there, I will say that the knitting machine was operating but this attachment was not. It was not complete. As to whether the [fol. 344] mechanism, insofar as the actuating auxiliary chain 70 was missing, so that the attachment was in the same condition, so far as that mechanism was concerned, as is illustrated in the drawings of Fig. 1 and Fig. 2 of the abandoned Schletter application already in evidence, I will say that I do not know whether there were on that attachment at that time all the parts that are shown in this abandoned application. I do not recall seeing any parts which operated the chain 70.

These photographs are photographs which were taken of the machine in the condition as I found it. They only show the parts of the attachment as I found it.

Q. That was before you had added the necessary mechanism to actuate the chain 70 of the patent structure, is that right?

A. There was nothing added at the Brentmore Hosiery Mills whatsoever.

Q. You produced the machine as an exhibit in the Hofmann case, didn't you? The original attachment, in so far as it was original with parts added to it, is that correct?

A. Those parts were incorporated in the model.

Q. Did you or did you not instruct the mechanics at that plant to take the original attachments just as you got them at Brentmore and to make an operative structure from it by adding whatever was necessary, following strictly the disclosure of the patent?

A. I did.

Q. You did that.

Mr. Shaw: Just a moment, I object to that; it is not [fol. 345] proper cross examination. We did not mention the model produced in the Hofmann trial or any instructions after the photographs were taken.

Mr. Darby: If your Honor please, I beg for a little latitude in cross examination of this witness because it has a bearing on the workability of the machine.

The Court: But this witness was not asked anything about the Hofmann trial. Objection sustained.

Mr. Darby: May I note an exception.

The Court: Yes.

Q. May I ask this question: Did you take this original attachment that you saw in the Brentmore Mills and put it in operating condition?

Mr. Shaw: The same objection.

The Court: Objection sustained.

Mr. Darby: May I note an exception.

The Court: Yes.

The Witness: In the photographs that I have referred to, there is no apparatus or mechanism for actuating a chain corresponding to patent chain 70 marked main cam shaft on the device. In the machine as I found it and as illustrated in the photographs, there are no stops shown mounted on the reversely-threaded spindle.

Q. They are not. What became of that machine, I mean that original attachment as illustrated in the photographs?

Mr. Shaw: I object, your Honor, on the ground that it is [fol. 346] improper in view of the direct examination and it is immaterial and irrelevant.

The Court: Objection sustained.

Mr. Darby: I note an exception, if the Court please.

Q. May I ask the witness if he knows what became of the machine? If the plaintiff still has it in his possession?

Mr. Shaw: The same objection.

The Court: Sustained.

Mr. Darby: Exception.

Q. Have you had anything to do with the machine since the photographs which you have produced were taken?

Mr. Shaw: The same objection.

The Court: Sustained.

Mr. Darby: Exception.

The Witness: The hook-arm that I have marked K on the drawing; was on the machine as I found it, and when the photographers were taken.

Q. Will you point out on one of those photographs the chain which corresponds to the chain 70 of the patent?

A. I don't believe I referred to the chain 70.

Q. You referred to the patent, however, and the patent structure, and I am asking whether you can point out on the photograph the chain that corresponds to chain 70 of the patent?

A. The chain is not shown in these photographs.

Mr. Darby: That is all.

[fol. 347] Miss Mary Hargan, called as a witness on behalf of the plaintiff in rebuttal, being first duly sworn, testified as follows:

Direct examination.

By Mr. Shaw:

The Witness: My residence is 4933 North Front Street, Philadelphia, and I am a bookkeeper. I was at one time employed by the Brentmore Knitting Mills. I was employed there from 1915 until 1933. My position with the

Brentmore Knitting Mills was office manager. I was office manager during that entire period.

Mr. Richard Schletter was interested in the Brentmore Knitting Mills. He was our manufacturer; he took care of all the knitting machines and he was also interested in the corporation. By that I mean that he owned stock in the corporation. Mr. Schletter stayed with the Brentmore Knitting Mills from the organization in August, 1912 until July 1, 1922, that is ten years. At the time he left on July 1, 1922, he had sold his stock interests in the Brentmore.

The products manufactured by the Brentmore Knitting Mills were ladies' full-fashioned hosiery with cotton welt and sole and silk leg and calf. The products that were manufactured and sold were plain hosiery. As office manager, I would know whether any design stockings were actually sold by the Brentmore Knitting Mills while I was there. While I was there and Mr. Schletter was there, I recall his working on an attachment for making designs in hosiery. That was about the latter part of 1920 or the early part of 1921.

I fix that date by reason of the fact that the mill was not [fol. 348] operating at that time due to a strike. The union in Philadelphia was on a long strike.

I saw the attachment that he made. I saw it operating. I saw samples of stockings made on it. Mr. Schletter had one attachment at the Brentmore Mills for this particular business, that is design for hosiery. It was placed on a Reading full-fashioned knitting machine. All our machines were Reading full-fashioned machines. We had nothing else.

In my duties as office manager, I had occasion to go into the knitting rooms, I went into the knitting rooms at least once every day, sometimes several times. My duties as manager were such that I knew what materials were purchased by the mill. I did all the ordering of the goods used in the mill.

The attachment was paid for by the Brentmore Knitting Mills. I stated that I had seen certain stockings which Mr. Schletter manufactured on the attachment. I have seen the designs shown in the photographs, Plaintiff's Exhibit 41. I saw those stockings with those designs in the Brentmore Knitting Mills.

I stated that I had seen the attachment in operation. As to which of those photographs correspond to the stockings which I saw manufactured, I will say that when I saw the machine in operation, this zig-zag sort of effect like the design in Plaintiff's Exhibit 17 was on the machine. This was the design I saw being made. I saw the fabric coming off the machine and it happened it was this particular pattern, Plaintiff's Exhibit 17, that was being made when I was in the mill.

[fol. 349] Mr. Schletter was operating the machine.

I am asked what he did. He did everything necessary to turn the fabric off the machines. He was operating it.

I had seen from time to time the regular commercial stockings manufactured by the Brentmore Knitting Mills.

Q. How did the work with Mr. Schletter did in operating the machine with the attachment and making a stocking like Plaintiff's Exhibit 17, correspond to the way that the machines were operated in regular production?

A. It did not vary in any way that I could say, other than this designed fabric was being made instead of the plain fabric. The machine was operating under power. Every machine had an individual motor in it. When this Plaintiff's Exhibit 17 was manufactured, none of the operations were carried out by Mr. Schletter by hand.

I will describe briefly, the parts of the attachment that I remember were there on the machine. They were the spindle and nuts and a sort of hook that had been made by Mr. Schletter in the mill, or at least had been made in the mill.

I recall that Mr. Ischinger of the Textile Machine Works came to the mill and took photographs of the attachment. As to what was done with the attachment after Mr. Schletter severed his connection with the company in July of 1922, I will say that it was never used, but remained on the machine just as he had placed it until it was removed by the Textile Company. I am shown Plaintiff's Exhibit 47, which are the photographs introduced by the witness Ischinger, and am asked if I recognize the spindle and nuts [fol. 350] shown in the photograph No. 8,222. I do. Here is the spindle and here is the nut referring to No. 11 and referring to No. 9, I mentioned a hook which Mr. Schletter had made there in the machine shop, looking at photograph No. 8,227 I find the hook there. It is very plain.

Mr. Shaw: Referring to the unnumbered and unlettered hook.

The Witness: As to whether Mr. Schletter showed the attachment to anybody when he had it completed and before he left the mill, I will state that I could not say he showed it to anybody particularly. He asked me to come in and look at it and see what he could make with this particular attachment. I do remember the visit of Mr. Max Miller of the Textile Machine Works to the mill.

Mr. Shaw: You may cross examine.

Cross-examination.

By Mr. Darby:

The Witness: I was familiar in a general way with the operations of the operators in knitting hosiery. I have been the operators. I have seen them operate frequently. During the production of hosiery, they have a number of manual operations that they perform in operating the machines. They turn wheels here and there and take care of the thread carriers and the motor starting the mechanism. I have seen them perform a number of manual operations in the normal course of operating the machines. As to whether when I saw Mr. Schletter operate this machine, I saw him perform similar manual operations, I will say [fol. 351] that other than turning the machine on in starting it running, I did not see him do anything, because we were standing in a space between the machines that we call the alley,—he and I were standing in front of the machine, the machine started off and the fabric seemed to come off the machine and I did not see anything different than that.

When Mr. Schletter left the company in 1922, he left the machine there. I could not say whether when Mr. Ischinger came to see it in 1931, it was in exactly the same condition as Mr. Schletter left it in 1922. Between the time Mr. Schletter left in 1922 and at the time that Mr. Ischinger came in 1931, the attachment had not been operated. The machine ran in the usual way. The attachment had not been operated in that period of time. However, it was left right there on the machine in plain view, where anybody could see it that wanted to see it, that is right.

Mr. Darby: That is all, thank you.

OTTO HUBER, called as a witness on behalf of the plaintiff in rebuttal, being duly sworn, testified as follows:

Direct examination.

By Mr. Shaw:

The Witness: My age is 29 years; I am a hosiery knitter employed by the Rogers Hosiery Company, Philadelphia; my residence is 7174 North 19th Street, in Philadel-
[fol. 352] phia. I am a knitter working on the legger. I never worked on the footer.

I was at one time employed by the Brentmore Knitting Mills of Philadelphia. That was in July of 1920. I stayed there until March, 1922. Richard Schletter the manufacturer was in charge of production of the mill at that time. I recall that Mr. Schletter worked on an attachment for making designs on hosiery while I was there. That attachment was completed before I left. It was completed before the strike was over. As to the date, I could not say exactly, whether it was the latter part of 1920 or the early part of 1921. I personally had something to do with the attachment or putting it on the machine. I worked in the machine shop and my job was to help with the machine in various parts and place some of them on the machine. My father was working for Schletter at that time. He built the attachment. My father is not living now. I saw the attachment in operation. I saw the machine that it was placed on. It was placed on a Reading full-fashioned machine. I will state in a little more detail what I personally did with regard to putting the attachment on the machine.

There were various holes on the beams, in the front and back beams; I drilled out and tapped them with ratchet drills and attached them and helped with different parts in the machine shop, like drilling the holes,—just little jobs around that I could do. I will describe the mechanical parts of that attachment that Mr. Schletter had on his machine as I recollect them. It consisted mainly of the reversely-threaded spindle and two nuts. In those two nuts were two steel blocks—stops. There were bearings with held the
[fol. 353] spindle in the bracket and by which the whole attachment was fastened on the machine. There were two ratchets with teeth running in opposite directions. There were several clawkers and the index wheel, silent chain and

wheels in the hand crank; there were two pattern chains, one in the front of the machine and one in the back of the machine with various shafts, cams, and cam followers. The purpose of the pattern chains was as follows: As I recall it the front pattern chain determined the timing, and the back pattern chain determined which rocker or pawl operated to direct the movement of the nuts on the reversely-threaded spindle. I spoke about steel blocks or stops that were placed in the nuts on the spindle. This co-operated with the machine's operations automatically. They co-operated with the yarn carrier rods. There were stops on the carrier rods which hit up against the stops on the nuts which directed the pattern to be made in the stocking. I recall that the steel blocks or stops oscillated or rocked.

As to whether the various stockings that I said I saw manufactured employed the tilting or rocking stops, I will say that in some designs they rocked and in others they did not. It all depended on the particular design you were making.

As to what mechanism there was to stop the oscillating steel blocks from rocking, I will say that there were two hooks on the front of the machine and when you did not want the blocks to rock or oscillate, we took those two hooks and placed them up on the shaft in the front of the machine which lifted the cam follower off the cam and stopped the motion of those blocks.

I am shown Plaintiff's Exhibit 41. I have seen the [fol. 354] stockings shown there. I saw Mr. Schletter make them and that applies to the various ones in these photographs.

I have seen stockings like Plaintiff's Exhibit 17. That was manufactured at the time at Brentmore that I have been testifying about. I will describe how the machine was operated when a stocking like Plaintiff's Exhibit 17 was manufactured. There were three carriers used. The two outer carriers were black carriers there that moved from the end stops to the stops which were inserted in the nuts on the attachment and the center carrier worked between the stops on the attachment, and as the pattern chain determined which way the spindle should move, and the carriers naturally moved in the direction the ends moved in, forming the design. I could not say whether when that particular design was made whether the steel blocks or stops were

oscillating or not. I had no experience in what particular design was being made when the blocks were moving or when they were not. In the manufacture of stockings by this attachment the manual operations required were merely to put the attachment at the starting position and after that it worked entirely of its own accord, or automatically. The manufacture of stockings with that attachment on did not differ in any way from the operation of the knitting machines making the plain work.

I am shown Plaintiff's Exhibit 47. I can identify some of the parts shown in them. I see the bearings which held the spindle indicated here as No. 12 and the nuts, No. 9, the spindle 11, and the other bar 12; the ratchet and the index [fol. 355] wheel 22 and 21, and the hand crank E; the chain and the gear to which it was attached. The purpose of the hand crank was to bring the attachment back to the starting position after the stockings were finished.

Q. Do I understand your testimony to be that the steel blocks or the nuts held on steel blocks on the reversely-threaded spindle moved in and out automatically without any hand operation?

A. Yes.

Mr. Shaw: You may cross examine.

Cross-examination.

By Mr. Darby:

The Witness: I was about fourteen or fifteen years old when I went in the Brentmore Mills. I left the shop in March, 1922. I went with Mr. Schletter at that time. I was with Mr. Schletter until 1924. When Schletter left, he went in business for himself to manufacture stockings.

As to whether he had an attachment like the one that you have testified about in his new place while I was with him, I will say that while I was with him he was working on them. I could not say definitely whether he had one in operation. I saw them, I was helping to work on them, but I could not say that they were absolutely completed at the time I left. I still know Mr. Schletter. I have not seen him since I left there in 1924.

I am able to read a mechanical drawing to some extent. With respect to the mechanism that was on this attachment I saw in the Brentmore Mills, and particularly the

mechanism that was utilized for effecting ratching of the [fol. 356] selective chain, and I think I can read mechanical drawings sufficiently to say, if I saw a drawing whether or not that was the type of mechanism that was employed.

I am shown the drawing in evidence as Plaintiff's Exhibit 15, and my attention is called to the mechanism that is here shown for effecting ratching of the pawl 70, and I am asked whether that is the type of mechanism that was employed in the machine, I will say that it was similar to that. I could not say whether it was exactly the same mechanism, but there was a connection. There was some kind of connection.

My attention is called to the fact that on the rods which are used to rack the spindle there is provided a bracket with a lever B with a small part extending to the left of it, and I am asked whether a mechanism like that was employed. I say there was something similar; whether it was in that detail or not I could not state definitely. I could not say just exactly what the mechanism was. There was a connection, but what it was I could not say.

Mr. Darby: That is all.

CHRISTIAN F. MEYER, recalled by the plaintiff in rebuttal, having been previously duly sworn, further testified as follows:

Direct examination.

By Mr. Howson:

The Witness: I have already been sworn in this case. [fol. 357] I have examined the Cecka United States Patent 1,180,568 and understand it. This patent shows a device to provide means to make splicings between the selvages of a full-fashioned stocking, and splicings only. Nothing else can be made by the means of this attachment. The inventor himself mentions on page 1, beginning at line 15, that

"My invention relates to improvements in knitting frames and more particularly in apparatus for knitting in hosiery or the like patterns from reinforcing threads, and the object of the improvement is to provide an apparatus of this class by means of which reinforced portions can be

knit in the intermediate part of the fabric as distinguished from end frames by means of which reinforced portions can be knit only at the side. Thereby I am enabled to produce patterns of various forms and the effect of such reinforced portions can be increased by knitting the same from threads of a color different from that of the foundation."

Now this mechanism that is shown for that purpose consists of two carrier rods which are making these reinforcements. There are provided two rods which are meshing a small pinion 11 as shown in Fig. 11. Now it is clear that this pinion is to bear the full blow of the carrier rod when it comes to a sudden stop on the outline of the design. Now since in the full-fashioned knitting machines these carrier rods are very long and comparatively heavy, and since the [fol. 358] velocity of these carrier rods is considerable, it is clear that quite a hammerlike blow will be exerted every time when such a rod is brought to a sudden stop.

Now in the construction shown here in my opinion it is pretty obvious that that small pinion there, if it is to withstand such a succession of blows, continuously, will not last very long. In fact, it cannot. The device is, therefore, in my opinion, not practical and has, to my knowledge, never been in the market and has never been used.

These defects to which I refer, the flimsy character and so forth, are inherent in the character of the structure. They are the direct effect of the construction here.

Mr. Miller stated with reference to this patent that it was adapted for the making of inserts. That cannot be correct, for the simple reason that only two carrier rods are provided; that is, two carrier rods are driven by the friction boxes 6 and 7 respectively, and these friction boxes are stopped at the one end by the movable rack and on the other end by the standard end stops of the machine.

Now, if these two friction boxes would be employed for the making of inserts or split work, there would be no carrier rod left to do the rest of the fabric; that is, to do the end pieces or the center between the designs because these are the only two places provided in that patent to stop carrier rods at part of their stroke and when these two carrier rods, as I say, are so employed for the making of inserts there are no stopping places, no controls left to have any other [fol. 359] carrier rod make the remaining part of the inserts, either the center piece or the two end pieces.

The work shown appears to be spliced for reinforcing designs away from the selvage. The attachment is not adapted to make reinforced designs at the selvage. There is no reversely-threaded spindle shown in the patent or suggested. There is no spindle at all. There is a device or mechanism shown for operating the attachment automatically. There is part of such apparatus shown, namely, some pawls which can turn the attachment either to the right or to the left, thereby moving the racks toward or away from each other, or rather left or right, and these spindles are connected to two rods 30 and 31, and a cross bar. Then the specification says that some mechanism, some jacquard mechanism or some other mechanism is controlling the shaft rods to move either the one or the other of these pawls, but nothing of such mechanism is shown or described with the exception that it mentions in general some mechanism. I have never known of this device being on the market. The patent appears to have been assigned on its face to Schubert & Salzer. I know that concern. To my knowledge their standing and position in the knitting machine building industry is a very good one.

In the companion patent to Cecka No. 1,217,411 the same criticism which I have made of the structure of the device in the Cecka patent that I have just considered applies in the same way and for the same reasons to the device shown in this Cecka patent. This device is in all essential par- [fol. 360] ticulars exactly the same construction as the previous patent and the same criticism applies, therefore. By this attachment we could make splicing, reinforcing designs along the selvage of a stocking or a piece of fabric, as illustrated, for example, in Fig. 1. Those designs running in opposite directions include lines running in opposite directions. The inventor also refers in his application, on page 1, beginning at line 17:

"When making reinforced portions in knitted goods on flat hosiery frames the inward stroke of the thread guide is limited by means of fixed stops which correspond to the desired breadth of the reinforced portion. By means of such a mechanism only reinforced portions can be made which have straight border lines, while it is not possible to make fancy reinforced portions.

"In my co-pending application, Serial No. 852,417, I have shown and described a mechanism by means of which fancy

reinforced portions can be made such mechanisms consisting in a pair of stop members each adapted to arrest either one of a pair of thread guides and formed on adjacent sides with rack teeth, a pinion arranged between said stop members engaging in the teeth of the racks so as to shift the stop members in opposite directions upon being operated by a pawl and ratchet mechanism. However with the mechanism described in the said application only such reinforced portions [fol. 361] can be made in knitted goods which are of equal breadth all over. In order to be able to gradually increase the reinforced portions to any desired point and to reduce them thereafter and, if desired, increase them again, the mechanism disclosed in said application has to undergo a certain change which shall hereinafter be explained."

This attachment is designed and adapted to produce a particular type of selvage reinforcement, and refers to another patent also designed to produce a particular type of selvage reinforcement differing somewhat in character.

The other Cecka patent that I first referred to is first designed and adapted, not to produce selvage reinforcement, but to produce reinforced designs between the selvages exclusively. None of these attachments are adapted to produce split seam or insert work.

With all three of the devices by Cecka at this time they could produce only a part of the character of designs, all of which are capable of being made by the attachment of the patent in suit.

I am familiar with the Albert Gee patent. I will state what character of work that is designed to produce, and briefly, how it does it.

This attachment also makes spliced or reinforced designs on the top of some body fabric of some kind, but it is very limited in its scope, for it can only make such a design which is determined by the steel pattern pieces V shown in Fig. 1. The steps shown in that part are the determining factor in the relative position of the carrier, and it is therefore clear [fol. 362] that to make any other design, that particular part would have to be replaced by a part corresponding in its outline and in the formation of these steps to the pattern which it is desired to make. It is easy to understand that this is a very costly and inconvenient way of making such designs.

Now, in order to make this device operate, there is a ratchet which is racked tooth by tooth by means of a suitable pawling mechanism shown on the bottom of Fig. 2 and which is rigidly fastened to a cam shaft 10. This cam shaft bears a cam A-9; the turning of this cam imparts motion to a roller A-H, and a cam lever A-C fulcrum at A-5. The arm A-4 extending to the left from this fulcrum is swinging upward and downward according to the outline of the cam to meet or engage or stop one of those steps which are clearly shown in B at Fig. 1. The outline of this cam therefore determines the rotation in which these particular steps are to be stopped, and these steps being fastened to the carrier rods, they in turn stop the carrier at the desired place. That entire construction also is in my opinion not a very desirable one. I saw this work myself in the mill where Gee was employed, and he was of the same opinion.

The patent appears to have come out in 1912; so far as I know, the device did go into use to a certain extent, by the inventor himself. It was the Hancock Mill in Philadelphia. In that mill they have Reading and foreign machines. Whether in those machines any attachments are in use now for doing design work, I will say that I have not been in the mill in a very long time; the only thing I know is that the [fol. 363] Hancock Mill bought quite a few Schletter attachments of the patent in suit from us. This attachment of the Gee patent is not adapted for split seam work. It is not adapted for that for the same reason, because there is only one step provided and only one carrier rod has room there to be stopped on either side, therefore, there is no more room for other controlled carrier rods to make any split designs. In split designs of that nature you have to have at least the possibility of controlling five carrier rods, one to make the fabric between the designs; two to make the designs themselves and two to make the portion from the design to the outer edge and selvage. With respect to reinforcement or splicing work at the selvage; this attachment as shown and described is adapted for that. At the selvage it could be done. It would be merely necessary to employ one carrier rod against the end stop and the other carrier rod against this particular stop B shown in Fig. 1. But there is nothing said in the patent about that. That is not mentioned. It is just generally said that it is for variable ornamental hosiery in the introduction there. There is no automatic reverse motion

in this patent. The difference in the form of the design is caused by the rotation of the cam and the varying outline of that cam, of course, furnishes the means to step up the particular stop that is wanted. There is no reversely-threaded spindle. There is nothing corresponding to the operation of the reversely-threaded spindle in two directions.

Referring to the Landenberger patent No. 1,134,749, I will state with reference to the construction and operation [fol. 364] of that device as shown in the patent as follows:

That is what is known in the art as a drum type attachment and it is operated by two discs or drums which are marked in this drawing 19 and 20. They are all of circular form and on the outer side—I mean the side away from the center of the machine, a number of pins are provided; 56 they are numbered in the patent drawing. The carrier rods, or in this case, rather, the carrier rod driver, strikes against those pins, bringing the carrier rods to a stop in that way.

During the operation of the machine to obtain a design, there is a pawling mechanism provided which gives a step by step movement to these discs, thereby bringing one pin after the other before the stop of the carrier rods. That is perhaps best seen in Fig. No. 2 at the extreme left end of the drawing, and the driver 47 sliding on a round bar marked 16 has an extended arm on the left end of this rod 16—left side of this rod 16, and a stop screw on that arm strikes against the pin on the pattern wheel or pattern drum, which is very clearly shown there.

Then, the driver is provided with a slide. One can see the handles to move these slides outward or inward, to either connect or disconnect the carrier rods 40-A, 41-A, 42-A and so on, shown at the extreme right end of these s-ides.

Now, this is almost the same in principle as the two patents just described. The difference is that in this case, for changing the design, it is not necessary to supply an entire new pattern piece, but the height of the pins determines the shape of the design and by replacing pins with different heights, [fol. 365] the design can be changed. However, it is very difficult to do that also, because these pins must be very accurate, it being necessary, as we have had explained before, that the carrier stops exactly over a divider and it may not stop over what is called the sinker, for the simple reason that the fine tube in the front of the carrier extends beneath

the sinker for reasons which were also explained, so that it must stop over the divider, which is correspondingly lower. Now, in a fine gauged machine, where we have thirty or more such dividers per inch, that is a matter of extreme accuracy to stop the carrier just at that particular point, and therefore, it follows that the height of these pins is of very great importance. They must be very correct, and to make this height so exact, of course, is again a costly matter, and when several of these pins or all of these pins are to be exchanged, it is pretty expensive.

Then, there is another thing, these drum type attachments are very limited in their capacity,—not in their design capacity as far as the shape of the design is concerned, but as far as the length of the design is concerned. Naturally the circumference or circle on which these pins are placed is the limit of such length of design that can be laid. Of course, when that is full of pins you cannot put any more on. It might be said that this circle could be increased in diameter in order to create the possibility of putting more of such pins on the circle, but that has the disadvantage that when the circle of pins grows too large in diameter, the leverage is increased from the axle or from the center of this drum [fol. 366] to the periphery or to the circle of pins and that is naturally a very bad thing, because as I said before, these pins have to bear the brunt of the blow of these carrier rods constantly, and it will take not very long to have them come loose and get inaccurate, and develop such defects in the stockings that they have to be either repaired or taken out. I am personally familiar with the Landenberger drum attachment as actually used. I saw them continuously. They were pretty universally used before 1927 or 1928. Up to that time they were almost universally used. They were used particularly for one particular thing at that time. That was to produce the pointex heel, which is a one-way selvage reinforcement design in one direction, and is illustrated as such in the patent. It shows no other design. To my own knowledge those Landenberger attachments are used today to a very limited extent. The Schletter attachment—the attachment in suit must have taken its place because it is established that these attachments have been sold to the number of about 15,000, and that is about the entire number of machines in the United States.

Mr. Miller makes this statement with reference to this drum attachment of Landenberger:

"Q. So far as the designs are concerned, could you make any design with the Landenberger attachment that can be made with the attachment that the plaintiff company sells, assertedly under the patent in suit?

A. Oh, yes. * * *"

With reference to that, I will say that for the same reason which I have explained before, there is only one pin [fol. 367] on each side and, therefore, only two carrier rods can be controlled.

If we look at the patent again at Fig. 2 of the patent, there it shows very clearly that the driver 47, with its extended arm to the left, can only strike one pin, no more, and there is no more room for any other carrier rod nor is there any provision made for it. That same thing applies on the opposite side. Therefore, only two carrier rods can be controlled by the use of this attachment, and unless it is entirely rebulit, it is an impossibility to make any other design,—except one thing, I could use opposed stops or opposed abutments on one carrier rod and use either side of the stops, and then make a design between the selvage, some spliced design, but nothing else.

Mr. Miller testified in connection with some suit or other that he utilized Landenberger drums to make stockings of the character shown in Defendant's Exhibit O and Defendant's Exhibit P. With respect to that I will say that I saw them. If you would have substituted "drums" for "attachments" I believe it would be true. If he used more than one attachment, of course, he could have done it, but in one attachment as it is shown here, it could not be done. With at least two attachments, it could be done. In Defendant's Exhibit O and also in Defendant's Exhibit P, unless he had a Landenberger attachment which he changed or rebuilt in some form, but that, of course, I am unable to say.

With reference to Patent No. 1,644,688, to Osterreich, October 11, 1897, and I will state what type of device that [fol. 368] patent shows and describes.

The Osterreich device is also a drum attachment similar to the Landenberger device, but instead of one row of pins, the pattern drums are provided with two circles of fashioning pins.

All the objections which are mentioned with regard to the drum attachment are also present in this case. If anything, the accuracy here must be considerably greater because these two circles of pattern pins must work together; the carriers controlled by them, the way it is shown by the patent, are at a dividing line and, therefore, these co-operating pins in relation to each other must be very accurate in order to get the proper working of the machine.

This attachment has greater design possibilities than the Landenberger patent for the simple reason that there is an additional row of pins which can be utilized to control two more carrier rods, in addition to the two which one can use in connection with the Landenberger patent. But even with that increase in design possibilities the patent cannot make everything that the Schletter patent can. There are still limitations which, if I may, I can point out on some drawings which I have prepared for that purpose.

I have here a set of drawings, showing side by side the Schletter and Osterreich structure.

Now, bearing in mind that Oesterreich controls four carriers and that is the limit of his control, whereas Schletter can control as many carriers as there are carrier rods in the machine. A design like this, for instance, having this pink center portion, Oesterreich could make by employing one [fol. 369] row of his pins with the post abutments on either side.

This blue design he could make by the employment of the other carrier marked blue, and the yellow naturally by this here (indicating), but then he would be done. In that particular stocking, if he wanted to make even a pointed heel, he could not do it. He had no more control for it except this design is so short that he has still enough room left on his drum to do that, but if the design gets so long that the circumference of his drum is taken up with fashioning pins, then, he cannot do it any more.

Here is a similar design he would have for the blue shadow clocks where he would have to employ the blue; for the pink ones he would have to employ the pink and this one would be left; there would be no way of doing it in his attachment as it is shown in the patent. Schletter, of course, has always sufficient number of carrier rods available to do that. He can employ any one of his carrier rods to make any design that he wishes.

Here is a third one, that is on the same order. There are quite a number of designs and figures which the Osterreich device cannot make, whereas Schletter is in position to make them without any alteration of his device as it is.

Mr. Howson: I offer in evidence the three drawings just referred to by the witness as Plaintiff's Exhibits 48, 49 and 50.

(Marked Plaintiff's Exhibits 48, 49 and 50.)

[fol. 370] I personally knew this Edward Osterreich, who took out this patent. He is dead. These Oesterreich devices did not actually go on sale in the United States market.

I will now refer to the Schletter patent, 1,198,482. That also appears to be some kind of a drum device. I will state very briefly how that operates. It is almost exactly the same as—in fact in principle it is exactly the same as the Gee patent. There is a drum there which is driven by a pawling mechanism and which has a number of pattern clocks or pieces or whatever one wants to call it, which are utilized as stops for the carrier rods and in this way control the stroke of the carrier rod in accordance with a design exactly like the Gee patent, the only difference being that on this pattern drum 17 and those pieces 19, 21 and so on, are set in. They are not one solid drum, which would make it a little cheaper to replace the pattern at least, because it would not be necessary to make an entirely new pattern drum. It would only be required to replace these different insets in order to change the outline of the design. This device is adapted, let me say, to any type of work which does not need more than the control of two carrier rods in a stroke less than full width of the fabric being made at the time. That means that you can make a design at the selvage or you could make one between the selvages, but only a splicing design, nothing else. As to whether this device has any automatic reverse or whether it is operated all one way, I will say that it is operated by a pawl in one direction and the shape of the steps gives the [fol. 371] shape automatically. As to whether Mr. Schletter ever put this device on the market, I will say I know he did not. He used that in his own mill.

I will now refer to the Rowlett U. S. Patent 500,953. This is a so-called Lamb machine with two parallel needle beds. The main purpose of this invention is that work

may be produced without holes being left in the work. The inventor speaks of that at page 1, line 33, where I quote:

"The main object of my invention is so to construct such machines that fashioned work may be automatically produced upon them without holes being left in the work at the points where the widenings are made. Whenever a widening is to be made, a new needle is brought up into working position at the end of one row or the other of needles previously in work. In order that a hole may not be produced in the work by the bringing in of this needle, I, according to my invention, cause the last sinker loop of the work on the opposite row of needles to be stretched or placed automatically on this needle before any work is made upon it. I do this by making one of the needle beds capable of being shifted endwise to and fro a short distance and by then causing the needle which is to be brought into work to come forward and take the loop at the proper time."

[fol. 372] That is the purpose of the invention. Now this machine has driving shaft Z on sheet 2, Fig. 1, the pin Z^1 and the connecting rod Z^2 and the lever Z^3 are all together governing the reciprocating motion to frame Q on sheet 1, Fig. 1. A is the front needle bed and A^1 is the back needle bed. That is shown on sheet 4, Fig. 2 and sheet 5, Fig. 3.

The sheet 5, Fig. 3 is also the thread carrier G. The bolt H on sheet 5, Fig. 3 is raised by inclines G which is shown on Sheet 6, Fig. 3a. These inclines are fastened to slides G^{10}. All the parts marked K are for shogging back needle bed A^1, but they are immaterial to the parts of this machine that are of interest as far as the patent here is concerned. M shown on sheet 11, Fig. 6 and sheet 7, Fig. 4 is a sprocket wheel with a pattern chain which controls several movements. The thread-carrier G is carried by arm G^8 over a slide G.x, which can be moved along the fixed bar G^9. All this is shown best in sheet 5, Fig. 3.

On the bar G^9 there are also two slides, G^{10} which have an incline. These slides can be moved toward or away from each other by screws G^{12} on concentric axis. That is on sheet 3, Fig. 2. One screw acts on one slide G^{10} and the other on the other slide of the machine. Each screw is provided with two ratchet wheels, the teeth of which are cut in opposite directions. The pawls for driving these wheels are carried by four levers F, turning on the fulcrum

F^2. The other ends of the levers have pins connected to it which are working on jacquard cards.

[fol. 373] Now the moving or the lifting of this jacquard is to control these pawls and does it in such a way that the other end of these levers, as shown in sheet 10, Fig. 5, will be raised against a flat surface and the pawl will thus be swung out of the way where there is no hole in the jacquard card to meet the pin F^1 on the right hand of these levers. If there is a hole, however, then this arm is raised, the pawl is released and turns the sprocket wheel. There are four pawls to revolve each spindle in both directions by the means of this jacquard.

In this machine to my way of looking at it, in the first place it is not a Cotton machine. It is an independent needle machine, and the conditions of the problems are entirely different from what Schletter had to confront when he made his attachments for a Cotton machine.

In the first place, a Cotton machine, as I mentioned before, has these long heavy carrier rods, of great velocity which strike every stop with a considerable force like a heavy hammer blow. In the second place he has a number of carriers, 20, 24, 28, although on each one of these carrier rods, each one of those carriers must be in a very exact position as I have explained. There may be no rebound or anything like that. It must be just accurate. In the first place because it is necessary for the machine, and secondly, it would, in the fine stockings which are mentioned here repeatedly, the fashioning of them, give them a ragged outline. It would not give a clear design, and that is, of course, not desirable, and in fact it is not salable.

Then Schletter has the friction boxes to contend with to [fol. 374] drive his carrier rods. All that is obviously different from a machine where all that is to be controlled is a little incline which releases the carrier from its driver and leaves the carrier so to speak to itself. That absolutely cannot be compared to the problems that Schletter, as I say, had before him which were of such a different nature that I, in my mind, cannot see at all how anybody can compare them.

This patent we are speaking of is a so-called patent on an independent needle machine. Therefore there are in that machine no reciprocating carrier bars, which is characteristic of the Cotton machine. In place of that there is

simply a single carrier, or a carrier which runs on a stationary bar. The bar is stationary and that slides on it. In the controlling of the stroke of that carrier all that is required is to place by appropriate mechanism in the path of that carrier a light piece of mechanism, incline or something which will shove it away from the thing that moves it and cause it to stop. If I remember rightly in one of the other patents it was merely shown, on that account, this disengaging and engaging of a carrier of that nature. I may come back to that again.

The problem of controlling by stops these reciprocating bars in this many sectioned Cotton machine is quite a different problem from attempting to control the movable carrier off that incline.

I will explain what the independent needle machine is as distinguished from the Cotton machine. Very briefly, an independent needle machine is a machine, as the name [fol. 375] implies, where the needles work one way independently from each other, not, as I must say, as the Cotton machine does. That is, in the Cotton machine the thread is fed the full length of the section and then the entire section comes down and over the entire width of that section and makes the same number of laps at the same time.

The Court: They move in unison.

The Witness: That is right. Whereas in the independent machine they work one by one forming the loop as they rob from the carrier, being operated by a series of cams. The regular knitting cams which are probably well and generally known.

As to whether with respect to those two machines, the Cotton machine and the independent needle machine, are recognized as being different in type or not, I will not say that the entire construction of the machines is different and I believe I can best explain that if I take those particular parts which differ as these various patents come along. I intended to show that.

In this particular patent, coming back to this Rowlett patent, that machine is not at all adapted to do any design work. That machine is not built for design work. The entire purpose of this control of these inclines is merely to reduce the stocking in width.

The splicing or reinforcing thread must not necessarily run the entire width of the fabric, but if I remember right,

it was said there were two carriers on this, other than a splicing carrier, and a main carrier. That is true in a sense. [fol. 376] If we look at the drawing on sheet 9, there is the main carrier shown at G. About the central part, the middle part of that G, it is marked G^1, and another thread can be seen. There are two threads. And that thread is a splicing thread that passes through there. So it is perhaps a little far-fetched to say there are two carriers. It is one and the same carrier and these two are combined.

Now when the splicing thread is to be put out of action, as long as it works it can of course only work for the same distance as the main carrier works,—when it is to be stopped then this little arm G^7 is, by suitable mechanism, G^6, depressed so that it slides over this little spring G^1 which is marked there, and through which this splicing thread passes. It presses spring down and cuts off the splicing thread and that is the way the splicing is stopped. Whenever splicing is to be done it has to be pulled out again and started. No design in any way or form can be made by this machine. It is not provided for or it is not an attachment.

When I say that it is not an attachment, I mean that the parts that I have been describing are the actual machine itself and not something to be used.

I will refer to the patent to Lieberknecht, that is United States Patent 981,663, and I will state what that device really is.

This patent granted to Lieberknecht is not an attachment at all, but it is an essential part of the full-fashioned machine. It is the part that is employed serving as the regular end stops of the carrier rods only that it is placed away [fol. 377] from the ends of the machine towards the center of the machine as was demonstrated with all these spindles, and one of them was showing this particular arrangement.

Now the object of this patent has nothing to do with controlling the carrier rods for the purpose expressed in Schletter's patent. Its sole object is to relieve, or if possible, the total elimination of the blow which is exerted by the carrier rod. And the stop which terminates this blow in its travel, generally that is known in the trade as a shock absorber. This is done by means of the reversely-threaded spindle upon which are mounted the end stops 23 and 24. Now the sides of these stops are sliding upon a guide shaft

22, and each one of those stops has an auxiliary slide movable in the direction of the movement of the carrier rod.

This slide is provided with a pin 60 as shown in Fig. 2. The pin 60 which it turns, slides in a curved groove of two horizontal slides 57 and 58 respectively. The motion of these slides is at right angles to the motion of the slides 52. Slides 52 are in the horizontal and these in the vertical direction. Sildes 57 and 58 are operated from a cam bar 67 down at the bottom of Fig. 2, which is provided with cam pieces 65 and 67 and which participate in the regular reciprocating motion of the machine. One end of spindle 25 is provided with a hand crank 28 while the other has a ratchet wheel 29 which is operated by well known means in one direction only.

Now the moving of the parts 63 and 61, with their rollers, on the cam pieces 65 and 67, when the bar on which these [fol. 378] pieces are mounted reciprocates, moves the slide upwards and the horizontal moves the slide sideways in accordance with the curve which is clearly shown in Fig. 2, marked 59, and this movement is in such a way that these horizontal slides are moving with the carrier rod when it approaches only very much slower, but as soon as the carrier rod comes into contact with the slides, then the shape of this curve reduces the motion so that when the carrier rods are at the end of their stroke the shape of this curve and the pins moving in them have practically absorbed the blow of that carrier rod. This, is really directed not particularly to the idea of putting stops in the center inside of the end stops, but it is a sort of a refinement of that. It is a shock absorber.

I will explain briefly to the Court how it is that a pair of stops at the center can take the place of the end stops. The end stops, stop the reciprocating bars at the ends. That is, they make a barrier. In substituting, as Lieberknecht illustrates in this patent, two stops here instead of the end stops, they do that by simply putting a pair of suitable abutments on the carrier rod and use them in the same way that opposed stops are being used only far enough so that they make a full stroke of the fabric. That dispenses with the end stops.

This patent hasn't anything to do with providing supplementary stops or auxiliary stops for the purpose of design. This is the regular end stop of the machine. Of course, the

end stop is perhaps not the right name, but it is in place of the end stop. It is the regular control for the full travel [fol. 379] carrier bars; in order to be able to make anything an additional attachment would have to be put on the machine.

As a matter of fact in the defendant's machines employing the infringing attachment in the Hofmann case, the machines actually employed these central stops; this type of end stop, and in addition to that had the infringing attachment also. The Hofmann machine always employed that type of stop.

I will now refer to the Kilburn patent, United States patent 19,370. That is not a Cotton machine. That is a machine in which the needles move not together, but move individually. They are not latch needles on this particular machine. There are no reciprocating carrier bars.

I will explain briefly what this device of this patent is, and what it does. This invention is a carriage in which the needles and sinkers and so on are mounted, and which is caused to travel to and fro upon stationary ways.

Then there is a second carriage which supports the thread guide. Normally the needles are moving, and the thread is fed to the moving needles until adjustable bumpers which are shown in Fig. 3, *j*, until these bumpers take the carrier slide along in that by stopping the feeding of the thread. In other words, the needle is moving and the thread is stationary, and at the moment when that feeding of the thread is to be stopped, the carriage through which the thread is feeding is also going along, and of course they go right together and the feeding stops there. *j* is this thread guide and in Fig. 4 is sliding upon H. The front side of that carriage has two snugs I and O which are alternately struck by bumpers [fol. 380] K and M which are carried along by the needle carriage D. This is in Fig. 3. K and M are the bumpers. These bumpers are mounted upon a traverse bar N supported in these little standards *j* which are shown in Fig. 3. This secures the sinker bed to the needle carriage. Bumper K is adjustable and can be sent along by the bar N by hand and fastened in any desired position by means of a little set-screw *n* which is marked Fig. 3. Bumper M is similarly sliding upon N, the other bumper on the left hand side, but is controlled by the nut *m* which is screwed to it. Nut *m* is working on a screw L. Mounted directly underneath the

bumpers in brackets K. This is Fig. 5. The shank of this screw L has a collar P with a notch to receive a spring pawl W. The purpose of this is to secure spindle L in any position after it has been set by hand.

In that way the fabric is narrowed or widened at one side only.

On page 4, column 4 of the specifications in the second paragraph, column 1, about in the middle of the column, not quite, the present machine is adapted to the widening of the work at one side only, but by constructing the traverse bar N in the form of a screw like the lower screw and causing it to act upon a nut in the second bumper K, the thread guide may be operated to widen the work at either side.

But there is nothing like that shown anywhere in the patent. It is merely a thought expressed in the specification. This machine, as I said, is an independent needle machine and the effect of this whole thing is about the same as the [fol. 381] narrowing machine in the full-fashioned machine. It is merely there to widen the fabric which is being used in the machine. The only difference is that in a Cotton machine such widening or narrowing is done by the transfer of loops, and here it is done by stopping the feeding of the thread at the desired places. This does not have anything to do with the making of designs by the use of supplementary attachments. No design whatsoever can be made.

This device that I have been describing as shown in this patent could not be referred to as an attachment for a machine. That is the machine. None of Schletter's work can be done.

I will now refer to the Sowter United States patent No. 478,527, July 5, 1892 and will state briefly what that patent illustrates so far as is relevant to this controversy. This is a Cotton machine, and the principal object of that invention is to make a provision in the machine merely for narrowing; that is, to make so-called gores or sags in ladies' garments or other garments where such gores are desired, but nothing at all is said in this patent about controlling the carrier rods. This machine is, according to the patent, to make underwear.

It has two separate groups of narrowing fingers, one to make the narrowings at the selvage and then an additional one to make the transfer of loops from the selvage in order to make narrowing similar to the ones which are shown in Fig. 1 of this patent, Fig 3 indicating the narrowings at

the selvage while 2 indicates such narrowings away from [fol. 382] the selvage. For that purpose this patent has two sets of narrowing fingers which are shown in Fig. 4.

The Court: What patent are you talking about?

The Witness: Sowter 478,527.

Mr. Darby: I was wondering whether the witness was referring to the British copy.

The Court: That is what I was wondering. He is referring to a figure not part of this patent.

Mr. Darby: Have you been looking at a drawing in the corresponding British patent to Sowter?

The Court: I think he has.

The Witness: That is possible.

Mr. Howson: That is referred to in the United States patent.

The Court: The figure he is talking about is not part of this patent.

Mr. Howson: Yes. That is the British patent to Sowter.

By Mr. Howson:

Q. Do you wish to produce a copy of the British patent?

A. I have it here.

Q. And the British patent is referred to in the United States patent?

A. It is referred to, yes.

Q. And contains this sheet which shows the garment?

A. It does.

Q. All right. If you will just finish.

Mr. Darby: I have no objection to your going ahead with that explanation.

[fol. 383] The Witness (Continuing): There are two spindles. Now A is the spindle working selvage points by means of nut B. By selvage points I mean the points near the selvage. There is a ratchet wheel C and pawls E and F. Spindle L with its nut M is located above A in the same brackets H, and is operated by ratchet wheels N, O, P and Q. These last two wheels are turned by extensions R and S, all in that same drawing attached to P and Q respectively. N and O are operated by pawls T and U by a cam and lever Y, shown in Fig. 2 and Fig. 1.

The axle of cam G—this figure 3—the lower cam carries a cam V and that cam is provided with an odd number of

faces. That is shown in Fig. 2 again. Cam V in this particular case has five flat faces, and a ratchet wheel which has twice as many teeth as this cam V has faces. Now each end of the machine—there are in addition to the regular narrowing points B a wide set of points C in Fig. 4, which is clearly shown there. There are small points B and the wide points C. These points are screwed to each other by screws D. These are all small letters—so that both can be moved as one piece, and as one is moved the other one goes along with it. By means of lever Y, a pawl X and the cam V is turned automatically and alternates pawl T and U for operation after pawls C and R moving B and M one needle outward have turned A and L by means of ratchet wheels P and C.

In other words, although this is in a sense an automatic operation it is the same reciprocating automatic operation which we have in the narrowing motion of the full-fashioned [fol. 384] machine. That is the one pawl turns the spindles in one direction in a number of teeth and the other pawl which is controlled by the five-faced cams turns it a certain number of needles, one or two, whatever the setting may be, in the opposite direction, and that is the entire scope of the automatic operation. I mean that must be repeated as long as the machine makes its narrowing and that is done, that is, the automatic part of it I mean is done by the cam V. The ratchet has twice as many teeth as the cam has faces, so that always one high point is at the one pawl while the flat side is on the other pawl. The next time that will be just the reverse. The pawl on the left which is shown thrown out now will be thrown in and the pawl on the right will be thrown out and so it alternates until the design, or rather the narrowing, is finished. And it is in all respects the same thing as the controlled narrowing motion of the full fashioned machine with the one exception that these two sets of narrowing fingers, one to make these gores on the inside of the fabric and the other——

The two sets being connected together work like one. It has nothing to do with the control of carriers. It is not even mentioned in the patent.

Such reverse motion as there is is only for chains at regularly repeated intervals, and the only means for that is this cam. There is no reversely-threaded spindle to it.

The patent has no reference whatsoever to design work. There is no carrier control at all. There are co-operating carrier rods. There are in the machine but it is not re- [fol. 385] ferred to in the patent. The Cotton machine of course has cooperating carriers. The change from widening to narrowing is accomplished by hand. That is a hand operation, the machine keeps on narrowing until the position of the lever is changed by hand.

I will now refer to United States Patent to Zwicky, No. 1,608,285. That patent covers a device which was put out by my company.

As the name of the patent implies, the title "Loop Regulating Mechanism," that is exactly what it is. It is a loop regulating mechanism which was made long before we brought out the Schletter attachment with the idea of regulating the width of the loops, or widening of loops in the reinforced portion of the Landenberger stockings. Landenberger stockings are the stockings with the heel reinforcement in the form of a triangle which were repeatedly discussed here and it is necessary, as was explained several times, for such reinforcement to make the loops wider, and since this change had to be done on an inclined line, some provision would have to be made to provide for that, and this is the attachment which was made for that. It simply consists of a reversely-threaded spindle with two nuts on it which are connected to rods 81, 82, and these rods are led to a device located in the center of the machine, a rocking device, and are fastened there to two cam pieces; two little cam pieces moving those cam pieces back and forth. This rocking device was constructed in such a way that when the reciprocating motion of the machine through bar 40 was operating it would press out these cam pieces as corre- [fol. 386] sponding abutments on that bar would pass them. Now by means of this spindle the position of these cam pieces was altered, or the length of the cam pieces to which the bar was exposed was altered, made shorter or longer, whatever the case was, and the rocking was correspondingly for longer or shorter stretch of loop formation. This attachment was, as I said before, used with the Landenberger stocking and was therefore only operated in one direction. It had to be racked back by hand. It was not made for the control of any carrier rods or any other work but the work I have just outlined here.

I will now turn to the Lieberknecht German Patent No. 117,153 and state briefly what that patent relates to.

This patent refers to a Cotton machine, and the object of the invention I think is best understood if I read a few lines of the translation of this German patent. It says in the beginning:

"In very long Cotton frames which make many pieces of fabric (W in Fig. 1 of the same pattern) side by side many parts, for instance the carrier rods and narrowing rods are very long. The main structure or frame of the machine which supports the needle bars in its many sections is a long and heavy body of great mass. The bars b-d, however, are just as long, but thin and of small mass. When temperature changes, for instance when the cold working rooms are heated early in the winter the long thin rods b-d are warmed through much faster than the body of the machine. [fol. 387] They will therefore expand much faster than the latter so that the co-operating parts of the machine do not fit together properly during the early working hours. When, for instance, the bar B in Fig. 1 is against stop *f* the left side the first carrier C and L is barely in its correct position between the selvages needle *e* and the adjoining outer needle e^1; the next carrier 2 of section B is already somewhat off due to the expansion in *f*. The third carrier is still nearer to e, the carrier finally going over the selvage needles. This, of course, causes faulty fabrics. Experience shows that for 15 or 16 stoppings of fine gauge the difference can amount to more than half the distance between two needles which would necessitate the stopping of the machine until all parts have an even temperature throughout. The narrowing fingers show the same differences.

. . . . . .

"The logical thing to remedy this would be to cut the rods into two parts and arrange separate stops and abutments. This, however, is costly and troublesome.

"My invention takes the stops f-f away from the ends of the machine and places them in the center or as near to the center as possible as shown by Fig. 2. This, of course, cuts the inaccuracies obtained by the expansion and contraction exactly into half and makes therefore a better working condition for the machine."

[fol. 388] This patent is one of the first attempts of this inventor to reduce the expansion and contraction of the machine by taking the end stops away from the ends and combining them into one unit and putting them into the center of the machine.

This device is not an attachment. It is the standard mechanism, the standard controlling mechanism, for the full length control of the carrier rods for the Cotton machine.

No mechanism is shown in this patent to operate any of the spindles automatically. No designs can be made by the use of this device in connection with the carrier rods as shown.

There are no co-operating carrier rods in the nature of Schletter's patent; that is, co-operating rods for a stroke less than the fabric being knitted by some other carrier rods.

I will now turn to the patent to Claringburn British patent 4967 of 1890 and state briefly what that device is in its relation to the subject matter in controversy here.

This is a device for a Cotton machine. The object of this invention is to enable the machine to make two sets of fashioning or narrowing, one on the selvage, and one at some distance from the selvage. These two sets of fashioning can be made on the same row of loops or upon different rows as may be required. This is somewhat like the Sowter patent with the one difference, that in the Sowter patent the long carrying fingers which make the loop inside of the piece of fabric and the shorter ones which do the same thing only on the selvage were connected with each other so they have to work together. In this case those two sets of [fol. 389] narrowing fingers, the wider on the inside and the narrower one are controlled separately and do not have to work together. In order to do this a shifting motion of the cam shaft is provided which must move twice. That is, it must shift first to operate the one set of narrowing points and then again move to another set of cams to operate the other ones.

This device consists, similarly to the Sowter patent, of a screw A with a nut C—this is Fig. 3, with its nut C to actuate the bars D and E in Fig. 3, and with it the narrowing points F and G shown by Fig. 4.

The ratchet wheels D and E are actuated by pawls G and F, turning screw A. The cam K is controlling the pawls F and G and must be operated by hand as shown in Fig. 1.

The brackets holding the spindle A are extended upwards and form bearings for the second screw L with its nut M. This controls the slides O and P in Fig. 4 by means of bars N and Q. The spindle L is operated by ratchet wheels R, S, T and U which are mounted upon a bushing. L is connected to A by spur gears. Pawls R and S turn into L and are also controlled by K. An additional movement is given to spindle L by pawl T and U which are controlled by a multi-faced cam Z also shown in Fig. 1 in the rear of cam K. This cam is automatically turned by the ratchet pawl B^1, which Figs. 9 and 11 show with the double shogging arrangement which, of course, does not concern this invention at all only in so far as the first shogging movement levers F and G operate spindles for the normal selvage work.

[fol. 390] This is not an attachment, but it is an essential part of the machine. This has in fact a regular end stop for the narrowing points. There is no reversely-threaded spindle in this attachment and not any of Schletter's work can be done. The device has absolutely nothing to do with carrier rod control. It pertains only to narrowing, the purpose being of having two sets of differently, independently working narrowing fingers for the purpose of making gores and pockets and things of that nature for ladies' garments. This patent shows and describes an automatic reversing motion. That automatic reversing motion would not be applicable to the use for which Schletter in the patent in suit has put his automatic reversing mechanism. This, as a matter of explanation, is exactly the same reversing motion which we have discussed in the Sowter patent. There is no difference, and I think it is, therefore, not necessary to repeat that description. The reversing mechanism in the Sowter patent, is absolutely not applicable as a timing and selecting mechanism for the carrier rods.

I will now turn to the Woodward & Shaw British patent No. 19,627, and state what that patent shows. I will quote from the patent itself. He says on page 1, beginning line 25:

"The chief object of this invention is to obviate the necessity for the attendant who has the machine in charge, having to manipulate the racking arrangement at both ends of the

frame after each set of goods or parts of goods has been completed."

[fol. 391] As this quotation says the sole purpose of this patent is to eliminate the necessity for the operator to go to each end of the machine to rack his spindles back and the arrangement is made to do so from the center of the machine. The reversely-threaded spindle which this patent shows is not provided with any automatic control because it serves for the same purpose as the standard spindle now on the machine, with the difference that the machine has two spindles on each side, one for narrowing and one for carrier control. Woodward has the same spindle for both, and only at one end of the machine. This, of course, makes it necessary to have the rows of bars controlled by the spindles in one piece. Expansion and contraction, as explained in one of the previous patents, causes so much variation in length in such rods that it would be impossible to use them for machines of any finer gauge or greater length.

This is, of course, not an attachment, but the machine itself. The spindle is operated by hand and the whole thing is very impractical on account of the objections just mentioned, if it is not inoperative altogether. Not any of Schletter's work can be done. There are no cooperating carriers in the sense of Schletter's patent and no automatic controlling mechanism and the machine can only be used for full width of travel of the fabric being made.

At the demonstration of certain mechanisms the other day Mr. Darby stated: "We are now going to produce a spliced clock from the mechanism which illustrates the Woodward patent." I saw that device. I also saw the mechanism at [fol. 392] the right end of the device which was stated to be illustrative of Woodward. As to what I have to say as to whether or not that device as shown in the demonstration has anything to do with the Woodward patent, I will state that I was unable to find anything. There is nothing in that Woodward patent anywhere giving any sugestion or indication that it, or any part of it, could be used for the splicing work such as was supposed to be demonstrated the other day. I did notice in that machine the selecting mechanism that was supposed to be representative of Woodward, I mean the selective mechanism which was at the end of the machine which was supposed to illustrate Woodward. That selecting mechanism in my opinion, as shown in that demon-

stration, in that form would not be applicable for use in the Schletter attachment of the patent in suit as a timing and selective mechanism. I will state why it would not be applicable. It would not be applicable simply for the reason that in his present construction you could not put it in the machine. It could be put in the machine there in the outer section where, of course, there is nothing to interfere with it. Everything is free and open, but it is sufficient to take one glance at the machine to see it could not be built into a section of the machine which is fully provided with all the parts necessary to operate the machine. This is true because Schletter is compelled to put his spindle in a certain relative position to the carrier rods. He has to get a rigid and strong stop lever there in order to withstand the blow of the carrier rods, and it is clear that to do that the fulcrum of [fol. 393] these levers must be very close to these carrier rods and at a certain position so that he could attain all his objects in this invention. That almost fixes the position of the fulcrum for the stops, which, of course coincides with the spindle, into a certain position on the machine. He had to have it there, and the reversing mechanism shown by that, particularly the one to which you referred, can not be built into the machine.

There is a difference in that regard between a device for controlling carrier bars and one adapted and intended to control the narrowing points—that is in respect to the location of the machine; where the spindle must be placed. I will explain that, I am speaking of the attachment when I say that it is fixed almost absolutely in this one position in which it is. Now when it comes to carrier rods and narrowing rods, of course that does not hold out, but the control of carrier rods and narrowing rods in the machine as it is, as Schletter had it before him, is on the outside. That is on either end of the machine. He could therefore not utilize that part of the machine, the outer end, for the construction of his attachment. He was compelled to take it into the machine and meet there these obstacles which I referred to some moments ago.

Q. I am not quite certain, Mr. Meyer, that I have brought out what I had in mind. Mr. Miller stated that the distinction between the control of carrier rods and the control of any narrowing points did not amount to anything; that whatever would control one could be used to control the

other. What I wanted clear, you stated in connection with the control of the carrier bars it required a location in the [fol. 394] central part of the machine so that certain controlling mechanism or selecting mechanism which might be usable at the end of the machine could not be employed on the inside of the machine because of all of the other mechanisms there, and I want to know how it is with a controlling mechanism for narrowing points? In other words, is it necessary to have mechanism which is going to control narrowing points as distinguished from carrier bars in the central part of the machine or can mechanism for that purpose be at the end of the machine?

A. That can be in either position. It can be in the center or it can be on the end.

Q. Briefly why is that? What is the difference in the work done in controlling the carrier bars and in controlling the narrowing points?

A. Well, their work is, of course, of quite a different nature. Just to mention one point: The carrier rods are reversing over the machine, and then come against their respective stops with a considerable blow as I have already mentioned. The narrowing points do not leave their stops at all. In fact, they are drawn against their stops by springs. They are in constant contact with their stops.

Then the narrowing rods being cut for expansion and contraction, have two stops so each half can be controlled in both directions, but those stops would prevent any carrier movement at all. It is not possible.

It is also made impossible by the fact that the narrowing motion swings through and back, up and down, during these motions to transfer the loops. Now all these differences of course make it impossible to use the one for the other.

[fol. 395] I will now turn to the British patent to Cotton, No. 208,362, and state briefly what that device is and what its capabilities are.

In this patent which is applied to a Cotton machine, C and C-1 are splicing carriers which are carried by carrier rods D-2 and D-3. D is a base on which nuts D-2 and D-3 are free to slide, and D-4 is a reversely-threaded screw which moves D-2 and D-3 towards or away from each other. D-5 and D-6 are the stops for the carrier rods or the abutments which are fastened to the carrier rods. The spindle is operated by a ratchet wheel which may be set in this par-

ticular instance so as to be a rack for one or two needles as desired. The inventor calls it the rate of graduation in claim No. 1 of the patent.

This invention, as I say, is applied to a Cotton machine in the description. The object here is to make what is known in the art as a pointex heel by adding a splicing yarn to the body of the fabric in a well known manner quite extendedly discussed here. It is an attachment in all its parts like the old attachment which was used before Schletter's invention came out, to make the pointex heel. It can only be operated in one direction, of course.

This attachment has quite a complicated safety arrangement to prevent the jamming of the nuts. That is, if the operator should forget to return them after his operation is finished they would eventually come together and something would break. Now such a safety device would have been unnecessary with Schletter's attachment, because the reversing button could have easily been put in such a position as to prevent any accident like that and cause the nuts [fol. 396] to be returned to their original position in an automatic way.

No insert work or no shadow clock work can be done on this particular attachment, as it is clearly shown in Figs. 2 and 3 of the drawings where the two arms extending from the nut corresponding to the stops 7 in the Schletter patent are very clearly shown to be provided and constructed only for the stoppage of the two carrier rods C-3 and C-2. It shows it there very clearly; that they cannot be used for anything else.

No split seam work, of course, can be done for the same reason. No reversing motion, automatic reversing motion, nor is there any controlling mechanism as far as the selector is concerned.

Q. Referring to the nuts which you say are adapted to control two carrier bars, you are familiar with this attachment, are you not, in actual use?

A. The Cotton attachment?

Q. Yes, the one-way reinforced selvage attachment?

A. This device is exactly like that. I have been familiar with that for 23 to 25 years. That was manufactured and sold by Textile Machine Works. It was made solely for the purpose of making pointex heels. I did not know it to be used for any other purpose whatever. It could not have been.

When these stops controlling two carrier bars in the manner shown in that patent are operating, there is not any control of any carrier bar by the stops with the abutments passing from one stop to the other. In other words, the stops in this attachment are not used as opposed stops. [fol. 397] They act simply as the stops either right or left stop between those particular stops, and the regular end stops of the machine.

My attention is called to one question and answer in Mr. Miller's deposition with reference to the Gotham attachment which I understood him to say is precisely the same as that in this patent. He was asked:

"Q. Could this attachment as it stands be utilized to manufacture any fabric, split or spliced, and would it, if designed and planned only in one direction to the wale? A. Yes, sir."

I say that it certainly could not be so used. The only thing that it could do is to make the reinforced selvage design for itself and what is known as the pointex heel—a straight line with a point on the top.

Q. As a practical matter are there any designs, either for inserts or split seam work or anything of that kind which could be made on this attachment working in one direction?

A. Only triangle. I have never heard of the use of such a design in hosiery for any purpose.

I will now turn to the British patent of Claringburn, 7,068, and state briefly what device that is and what its purpose is.

The object of this invention is to enable machines of the Cotton type to make fabrics such as ladies vests—the widening of the two inside selvages of one or more pieces of work such as making a full bosom gore in ladies vests, for instance.

[fol. 398] In the patent the stop on N of screw O is fitted with the slide N-1. This is shown in Fig. 1 of the patent. This slide N carries two stop screws U and V which can be adjusted so that either one of them may serve as a stop for the carrier A, which is making the center piece of the fabric which is shown standing right in the center to the right of Fig. 1. These stops are of different lengths and the difference in the length is equal to the width of the set of narrowing points which is used for narrowing or widening the

inner as well as the outer section of the fabric, this fabric being made in three different sections.

Now since these points are used for both sets the width of those points must be added or subtracted to suit the operation that is to be made. Therefore the difference in the length of these screws is just the width of those set of narrowing points and they are swung in such a way that either one or the other one of them stops the carrier A according to the narrowing operation which is made at that particular time.

This machine knits, as I say, three sections; first the center section A is knitted and then pressed off the needles. That means after the section which is shown in Fig. 2—the upper part of it—after that is knitted that is pressed off the needles as explained in the specifications on page 2, line 30. Then the carriers C and B are put into operation to make the portion from F to K, as shown in the patent. This involves the process of widening, of course. The machine having narrowed before, the nut O is moved in the proper direction to do so. For the open loops, of course, [fol. 399] for the widening which is well known in the art, the standard filling points are used.

At K and H, the high points there the nut O is moved in the opposite direction and the narrowing takes place.

The carrier rod M is sliding at a fixed stop P shown at the extreme left of Fig. 1, for the selvage of the fabric. Since this selvage is fixed, no narrowing can take place. In other words, that is a straight piece of fabric. If the nut O should be applied to make a narrow fabric or a wide fabric at the selvage which could be done, then the possibilities of making such a gore as shown would be eliminated.

It could not be done any more because the controlling feature would be used to control the widening or narrowing of the fabric itself. The movement of the carrier rod M at the edge—F and K—of the carrier is limited by the stop and the collar Q is also shown in Fig. 1.

After the outer portions are finished they are pushed down on the needles and the center part is run onto the needles again and the knitting of the center portion is completed.

I have here a piece of fabric which I had cut out to make that perhaps a little clearer. The center portions here are shown as they are knitted. This is the center portion which is knitted separately and then pressed off the needles and

then this is knitted on either side like this (illustrating) and then the whole thing is laid over in this way and sewn along the edges giving this gore which is the object of the patent.

To make this clear, this is not an attachment but that is [fol. 400] exactly the standard part of the machine, the part which is necessary to do the narrowing, and there is no carrier rod control with the exception of the stroke of the fabric being knitted at the time. There is no reversely-threaded spindle, nor can any of Schletter's work be done, the machine being merely equipped for the making of these gores as just described. There is no automatic device for the reversal of the spindle in either direction.

Mr. Howson: We will offer this garment produced by the witness in connection with his last answer as Plaintiff's Exhibit 51.

(Marked Plaintiff's Exhibit 51.)

Q. Mr. Meyer, you spoke of the pointex heel reinforcement which was done by this device of the Cotton machine, or the old Gotham device. Is that drawing a picture and illustration of the pointex heel?

A. Yes, that is an illustration of the pointex heel.

Mr. Howson: We offer this drawing in evidence as Plaintiff's Exhibit 52.

(Marked Plaintiff's Exhibit 52.)

The Witness: I will now turn to the patent to Chipman. It is U. S. Patent 1,163,970, and will state as briefly as consistent with such a complicated subject, what this patent is. I will first state what this machine is supposed to do. This machine is a specially built machine to knit automatically a stocking as shown on sheet 12 of the drawings. That stocking is not having any designs placed in it, or any [fol. 401] split seam work, not outside of the fact that some shaping is done in the form of the stocking itself. That is the ordinary fashioning. There is no design outside of that. I will state as briefly as I can what this reversely-threaded spindle does in the machine and how it is controlled. The reversely-threaded spindle in the machine, of which there are two, are controlling so-called fashioning spider arms which are shown in the patent in Fig. 5, 339,340 and so on. There are quite a number of arms there on the

right as well as on the left side. The ones on the right are the only ones that are numbered. And, of course, the ones on the left are exactly the same. Now these spider arms are turned so that there are blades on the outer ends of the arms which come into the path of the jacks which control these needles. The fulcrum of these spider arms is located in a curved arm 346, curving down from the spider towards a nut 348. The spindle 215 is moving this bracket and with it the spider arm either in the one or the other direction. That is, of course, doing only one thing and that is the narrowing or the widening of the stocking as the occasion may require. These spider arms, in a manner which is of no interest as far as our object in the patent is concerned, put jacks either into operation or out of operation, and in this way obtain the narrowing or widening of the stocking.

The control of these spindles is best shown by sheet 11 of the drawings, where the other figure 16 shows a section through the controlling device, while the figure below, figure 17, shows a side view of it.

[fol. 402] This device, a very highly complicated affair, as the inventor says himself in the specification, shows the spindle 215, and around it three ratchets. Around these ratchets again are located a number of ratchet rings, 225—they are marked, of which we have 225, 3, 4 and so on, of which we have five rings side by side some of which are cut in one direction and some of which are cut in another direction.

Since we have 5 ratchet rings which in turn control the three inner ratchets 255, we have a total of eight ratchets on either side, or, altogether, 16 ratchets to control the process of narrowing that stocking to its particular form. Obviously this was employed for the purpose of having enough controlling points to make this entire stocking in one operation, because in succession these ratchet rings are used, and then in turn they operate inner ratchets which are fastened to the spindle in such a way that there is a certain guard which sometimes permits the ratchet at pawling on one tooth, or sometimes for two teeth just as the shaping of the stocking might make that necessary, and the ratchets themselves are controlled in such a way as shown by Fig. 17.

This inner ring or drum which is shown in the shaded section of this drawing, and which is provided with openings 256—at 256 it is marked the end of a little lever which

is fastened onto the inner ring—now as the device turns eventually one of these little openings will come to that end 256 of the lever and it will slip into there, thus making it possible for that lever to get into contact with the lower, [fol. 403] inner ratchet 255 or one of the others as it may be and operate that until it is passed on and presses this pawl out of contact again. Now in this way the operation goes on and gives the various movements eventually to the controlling spiders for the needles until the stocking is completed. Of course it is absolutely impossible to make anything else but that very stocking with such a device.

This is not a Cotton type of machine. It is an independent type machine, and there are no reciprocating carrier bars. Referring to this reversing mechanism for controlling the spindles in this patent, such a reversing mechanism would have absolutely no applicability at all for Schletter's purpose in controlling the—It is an impossible thing.

My attention is called to one thing in Mr. Miller's testimony at page 256, as follows:

"Q. Are the additional ratchets provided so that the spindle can be rotated to a greater extent? A. Yes. That is right. That is the idea."

I do not quite understand that. Perhaps he meant in a way that the additional ratchets are provided to make the ratchets go two teeth instead of one. That is true, but there are no additional ratchets provided for that. They all do that. That is part of the invention.

I will now turn to the patent to Laue & Timaeus, German patent No. 21,332, of 1881, and will state whether that is a specially designed machine and what its purpose is and briefly how the purpose is accomplished.

[fol. 404] This patent is for the purpose of making designs in what is known in the art as reverse plating. That means that two threads are alternately becoming either a primary thread or a plating thread.

This is a Lamb machine which is shown in the patent, with independent needles. It does not really deal with the manufacture of stockings altogether, but is a hand operated device to make these reverse plating designs. I believe, If I am right, that it was cited to show that there are several carrier rods provided for a Lamb machine. Outside of that it does not show anything at all. There is absolutely

no similarity to Schletter. There is no spindle and no automatic control.

On page 290 of the record I find that Mr. Darby asked this question:

"Q. Is that the only purpose of this patent? A. This is merely to show it was common in Lamb machines to use multiple carrier bars."

I have no comment to make on that statement, but that is perhaps exaggerating the thing a little bit. It is done in Lamb machines, but it is not common. The common Lamb machine has only one carrier.

I will now turn to the Lamb & Noon British patent 15,129 of 1889, and will state what that device accomplishes and how it does it so far as relates to this controversy.

This patent relates to improvements on the patent to Lamb & Lowe and to their combination patents granted [fol. 405] to those same inventors. In the drawing B is a slur which carries the ordinary main thread carrier 1 and 2. Carriers 3, 4 and 5 are the supplemental thread carriers of which 3 and 4 are laying the stripes next to the end stripes and 5 is making the center portion, F and F^1 control the movements of the supplemental carriers through stops G and G^1 mounted on F and F^1 respectively. They are also provided with stops H and H^1 which control the inward movement of the main carrier bars.

These stops on the screws G and G^1 serve to control the supplemental bars 3, 4 and 5 and they are so arranged that though the heads of the screws to operate bars 3 and 4 face inward the head of the screws controlling bar 5 face outward, as shown by Fig. 3. Bars 1 and 2 work between stops H and H^1 and end stops C and C^1.

Slides E and F are fitted on screws which are not marked. I in Figs. 4 and 5 is a horizontal shaft. Upon this shaft are keyed two ratchet wheels their teeth being cut in opposite directions. Keyed to this shaft is also a spur wheel, i^4 which meshes into a train of spur wheels connected with the traversing screw of slide F. To give motion in either direction a mechanism is employed which is controlled by pattern chain I^4 as shown by Fig. 5. This mechanism is in all details the same as shown and described, as I mentioned in the beginning, in the British patent to Lamb & Lowe as discussed in connection with that patent previously men-

tioned. As far as the design is concerned which is shown, the center part is made by carriers 5, 3 and 4 making the adjoining stripes and 1 and 2 making the stripes from the [fol. 406] edge of the selvage to the next stripe of the design.

This machine has no reversely-threaded spindle. It is not an attachment. It is in fact a specially built machine for this particular kind of work. No reinforcing design can be made without changing the construction of the machine and no splicing work—I mean laying of additional thread on the body of the fabric could be made because there is no provision for any one of the carrier rods to run the full width of the section. There is a stop for carrier rod 1, an end stop on the right side, but not on the left. No stop is provided on the left side whatsoever. There is a stop for the other carrier rod on the right side but none on the left side which clearly indicates the purpose and design of this machine was merely to use these stops for the striping design as shown in the patent, the shape of which stripes of course could be altered.

Q. As I understand it, in this patent it is the selective or controlling mechanism for controlling the spindles which is not shown or described, is that right?

A. No, it is shown in one of the patents referred to before.

Q. That is in the Lamb & Lowe British patent, of 1870. Is that the one you referred to?

A. Yes, if that is the one that we discussed some ten or fifteen minutes ago.

Mr. Howson: Just note that counsel agree that the Lamb & Lowe patent was not referred to by Mr. Miller.

The Court: I don't think it was offered in evidence? [fol. 407] Mr. Howson: No. I do not think so.

Q. Then that is all you need say about that, Mr. Meyer, except I should call your attention to a statement made by Mr. Miller at page 300 in discussing this Lamb & Noon patent. He was asked this question:

"Q. So that the stops which control the traverse of the carrier rod are made removable so that the carrier can go right through to the end of the machine? A. Yes."

Is there any indication or suggestion of that kind?

A. Stops can be made removable, but as I say there is no provision made to stop these carriers on either side of the machine which would make it impossible in that construction to use them over the full width of the fabric.

I will now turn to the Black British patent No. 13,905, and briefly consider that patent.

That patent is quite foreign to the object of our machine or the invention of Schletter, and if my memory is right I think it was just offered to show the operation of a carrier in an independent needle machine type as compared with the driving of a carrier rod in the Cotton machine, and on Fig. 2 of the drawings there is such a thing which is known as the driver B connected to the carrier in such a way that one short offset at the end of Driver B, in this case on the right hand, engages to the corresponding offset of the carrier and takes it along until an incline or a cam [fol. 408] comes under that wedge-like extension and lifts it out of contact with the carrier, permitting the driver B to pass on the full stroke of its course while the carrier F remains at the place where it is left by the driver. Now I have on Friday given quite a lengthy explanation comparing the operation of such a device as this with the operation of a carrier rod, and I have endeavored to show there is all the difference in the world between these two.

I will now turn to the Mueller United States patent 1,564,438, and state its characteristics and purposes and operations, and so forth.

The Mueller patent is not a Cotton machine, but is for the so-called flat knitting machine with independent needles, and it is of the type in which an auxiliary thread-carrier is released from its slide by the so-called yarn carrier stoppers or inclines as we just discussed them in the patent referred to previously. This is the identical drive. As I explained at length that makes it already impossible to use anything of that nature as it is shown here for the full-fashioned machine, for the Cotton machine. There is a connection shown in this patent from the spindles, to which I will refer later, to those inclines releasing the carriers by means of the drivers marked 28 in Fig. 1 It will be seen by this construction that it is a long thin rod which extends from one of the nuts to one of the inclines to release the drivers. This is very well possible in this machine where there is nothing else to do but just move a little bit of steel

of which the inclines consist, and all they have to do is to [fol. 409] release that carrier. There is no weight and there is nothing to overcome and therefore a flimsy construction like that affair is possible in a machine of this type, but it certainly is not possible in a machine of the Cotton type where the conditions and problems are quite different, as I explained.

Now another thing in connection with this, once more, is the fact that it would not be accurate enough for design work in a Cotton machine on account of the fact that the carrier is simply released and is not standing exact enough to make a design in a stocking where the structure is very fine and where such slight irregularities would not be permitted, but would make the stocking, if made by such method, unsalable.

That is all right for coarser material, for underwear and so on, and sweaters, but not for the full-fashioned machine with its fine and accurate work.

The principal mechanism doing this consists of a reversely-threaded spindle 24, provided with nuts 25 and 26, as shown by Fig. 2 best. Each one of these nuts is connected to a rod 29 and 28, which in turn is fastened to these inclines as I just explained. In that way of course the revolution of the spindle in one direction increases the distance between these two stoppers while a turn in the opposite direction decreases it in a well known manner, to wit, that if it has a fork-shaped ratchet pawl lever 38, connected to a slide 19 (Fig. 3). This slide is given motion by an eccentric 16 and connecting linkage which may be of any construction. That is shown in Fig. 2.

Loosely mounted upon the spindle 24 is a ratchet 41, [fol. 410] to which a step by step movement is given by ratchet pawl lever 43, which is swingingly mounted to arm 38 as shown by Fig. 4.

In addition there are two ratchet wheels 35 and 36 on spindle 24 the teeth of which are cut in opposite directions.

This chain which is mounted upon ratchet 41 is given a step by step movement by this eccentric through the connections which I have just mentioned. The chain which is mounted upon this wheel has three heights of buttons, a low one, a medium one and a high one. A cam piece 49 which is shown in Fig. 4 is brought into a certain position, either high, medium or low by these cam links. In accord-

ance with this position the outer end of lever 50 to which that cam piece 49 is fastened, swings up or down and with it a pin 53 which is attached to that lever.

In Fig. 3 that pin appears again lifting or lowering or elevating a fork-shaped lever 38 which can turn about a fulerum 44. Now according to the position of that pin 53 either the upper part of the lever is in contact with one ratchet or the lower part is in contact with the other ratchet, or a medium height put both of them out of pawling motion. And in that way the spindle of course is turned in the direction which is indicated by the arrangement of those three different heights of links in the chain 46, 47 and 48.

This is, as I say, not a full-fashioned machine and no reinforcing along the selvage can be made because there is only one auxiliary carrier; no inserts or split seam work can be made for the same reasons. No shadow clocks or [fol. 411] any double design can be made. There are, of course, no cooperating carrier rods in the sense in which Schletter took out his patent.

There are no reciprocating carrier bars at all, are there. There is no device at all on the machine for fashioning at the selvage.

Now if attempt were made to rebuild this machine and to put in fashioning screws of some kind so that a garment could be fashioned at the selvage there would be difficulty about that. I do not see where one could put it. I will explain. With an entire reconstruction of the machine it might be possible, yes, but even then there would be nothing gained except that the device could be widened or narrowed but the design possibilities of this auxiliary carrier would not be enlarged in any shape or form.

On the assumption that the machine is reconstructed and provided with fashioning screws in addition to those design screws already in the machine, I will explain why it is that no split seam work could be made and no reinforcement on the selvage. This is because there are not sufficient carriers to do so. There is only this one auxiliary carrier that can be automatically controlled, and that is all. Naturally if we could build six or seven carriers in there and control them all automatically, we could do that, but that is an entirely new machine.

Mueller does not suggest the solution of that problem at all.

I will now turn to the British patent to Willatt, No. 573 of 1871.

This is a patent which is an old English patent and shows very faint drawings. I believe that Fig. 3 is perhaps the [fol. 412] one out of which most of the description may be seen. This patent pertains to an independent latch needle machine. Its construction is of the usual kind showing some standards which are connected together by bars, and so on. The sinkers, dividers and other loop-forming elements are operated in a well known manner by locks and slides.

This invention is a device to narrow or widen the fabric made upon this machine, which is done as follows: A bar K is secured to the top support, supporting three bearings for axles of threaded screws L, which is shown in Fig. 3 on the left side. The outer ends of these axles carry each a rocking lever, the upper ends of which are provided with a double-ended pawl which drives a ratchet wheel. The lower end of the rocking lever is hinged by a link to the upper end of a lever which carries a stud O^1, operated by a groove cam P, contained on the camshaft.

There are two nuts M sliding on bar K which can be moved forward or away from each other. Bar K is directly underneath the spindle L. Each nut carries a slide N to which is linked a double ended lever N^1, the outer end of which is kept down by a spring; the inner end of lever N^1 carrying the narrowing points or ticklers.

The slide N is attached to the rocker lever fulcrumed at O. The lower end of this lever is operated by cam P on the camshaft in the usual manner.

Besides this movement which is the contact movement the ticklers have a movement up and down imparted to them [fol. 413] by the upper end of a lever O^2 also actuated by the camshaft. M^1 is a driving guard screwed to the top of each nut M. This is shown in Fig. 3. The inner end of this driver falls into a slot carried by a sliding plate R^2. In this way a carrier is thrown out of the path of the needles. That is one of the older constructions in machines of this type; that the carrier instead of being stopped is merely depressed so that the thread is taken away from the active knitting operation of the needles and in this way widening or narrowing is accomplished, and in this way it is done in this machine too; that the carrier falls into

this depression which I mentioned and is depressed away from the needles and the widening or narrowing, as I said, is performed.

This machine is like many of the others, not an attachment, nothing but the regular end stop of a machine, and the same nuts are used as clearly shown for the narrowing ticklers as well as for the control of the carriers, no automatic device being shown to obtain forward or backward motion of the nuts. It must be done by hand. There is no reversely-threaded spindle and of course no cooperating carrier rods so the knitting of Schletter's machine can not be done by the use of this device.

In considering this patent, Mr. Miller at page 289 of the testimony was asked this question:

"Q. And the stops controlled by the spindle; do they in turn control carrier rods which traverse less than the full width of the fabric being knitted? A. Yes."

[fol. 414] I will say that there are no carrier rods less than the full width of the fabric being knitted. That is the only thing that can be done with that machine.

I will turn back a moment to the Muller patent, and to certain things that Mr. Muller said in reference to that. He was asked:

"Q. Are there opposed stops for certain of the carrier bars which have a stroke——"

I will say no. There are no carrier bars in the Muller attachment.

He was asked whether or not there was a device for varying the stroke of the bars controlled. There are no bars, as I understand.

He was also asked:

"Is the chain device that you have referred to as illustrated in the figure, is that the main chain control of the knitting machine, or is that an auxiliary chain? A. It does not say, but I would not think it was the main chain. It looks to me to be just a little supplemental chain that has been hung there for the purpose, and to be a main chain it would have to be wider and have more room or more buttons."

My comment on that is that, of course it is an auxiliary chain. There is no main chain.

In other words, the Lamb type of machine which is con- [fol. 415] trolled by the cam system entirely is different from the Cotton machine.

I will now turn to the British patent 1,991, of 1869, to Roe and state what that device is and to what it is directed and how its work is accomplished.

Fig. 5 I believe is the figure which shows most of the parts to which I will refer in order to make this clear. This is an independent needle machine with spring beard needles. The machine has a camshaft from which motions are given to various parts of the machine. The part of the invention which pertains to the Schletter attachment is what the inventor calls the third and main improvement, the description of it beginning on page 6, line 9, and is called an apparatus for narrowing and widening the fabric. It consists of three brackets in which a round bar Q is free to turn. That is shown on the upper part of Fig. 5 slightly to the right. This bar is round and has a groove planed along its entire length. In the groove is sliding a square carrier bar Q^1, to which the carrier, of course, is fastened. The carrier bar has a lever Q^6 secured to it, hinged to a connecting link and to a bent lever Q^3 operated by a roller.

This construction is best represented by Fig. 6, but is not of great importance.

This causes the carrier to be raised into the position shown by Figs. 2 and 5. The traverse of sliding bar Q^1 is effected by a collar which is placed so as to slide free by bar Q. This collar forms part of a short arm S^{13} which is screwed to the bar Q^1. Attached to the bearings is a flat bar S^5, shown shaded in Fig. 5, on which a box S^6 slides. [fol. 416] This box has a projection in front on which, on the under side, S^7 is fastened and a chain is attached to this stud which passes around several pulleys and drums to give to this slide a reciprocating motion in accordance with the well known drive which is also described in the previous patent to Roe, but which is not important enough here to go into any details.

The opposite side of box S^{11}, the upper side, carries a stud on which the drivers S^9 turn, the drivers in this case being the drivers described repeatedly which releases the carrier from its motion.

One of the drivers will catch on S^{13} and move it along until such a driver is thrown off by the arm of one or the other of

the cam pieces S^{10} and S^{11}. The cam pieces are all inclines which lift the driver off the carrier.

Now these cam pieces are supported by S^{12},—the trucks or cam pieces which are mounted upon two nuts, S^1, and these nuts are moved by screws under the right and left of the center frame respectively. One of these screws is cut with a right hand thread while the other has a left hand thread. Each one of them is provided with a notched disc S^3 at one end, shown in the lower right part of Fig. 5. Between these discs is a hand lever, which is not marked, but is very plainly visible, and two reversible pawls S^4, each of which takes into the notches of one of these discs by raising or lowering the hand lever so as to rack the disc. The stop nuts will be moved away from each other if the pawls move one way, or if the pawls are reversed they move toward each other. The traverse of the carrier rod Q^1 is stopped at [fol. 417] each end by a short arm Q^5, which is shown in dotted lines extending from the lower end of Q^1 and another arm S^{12} coming up from the nut and is the stop against which the arm Q^5 swings to stop the traverse of the carrier rod, so that the position of these stops determines the length of the stroke of the carrier. Now the tickler or narrowing points are operated from the same nut at the same time by means of two bars T^1 and T^2 which are shown sliding in a base and are shown shaded on the right side in the middle of Fig. 5. This bar in which the two narrowing bars rest has a slide provided with a roller T^3 which runs upon a plate T^4 carried by suitable brackets, so that the entire slide carrying the narrowing points can roll in a horizontal direction in that roller. That gives the one motion to the narrowing points.

The other position, the lateral movement, is of course given to it by an extension from the nut S^{12}, which can be clearly seen. It is not marked but it has a bent arm which goes over to the narrowing rods, and whenever the stop nut is moved forward to shorten the stroke of the carrier, it at the same time gives the necessary lateral movement to the narrowing points.

This is again a machine which represents the modern narrowing mechanism in a machine with the one exception, that it has only one nut to operate the narrowing and carrier rods at the same time. That machine was originally made for hand operation as it is mentioned in the specification repeatedly. For power it speaks only of it in a very vague

[fol. 418] way and of automatic reversing not at all. Of course all the other objections are here, as no reversely-threaded spindle, no cooperating carrier rods and not any of Schletter's work can be done. It is merely for the narrowing of a fabric in its full width.

Mr. Miller on page 287 referring to this patent, said:

"We therefore have in this structure a right and left threaded carrier stop spindle, which while shown separated into two pieces, obviously could have been made of one piece."

I do not exactly agree with that. Although they could have been made in one piece, of course, I do think they would have defeated the purposes of this particular invention. With the screw in two pieces the possibility remains to operate one of those stops at a time which may be at times necessary, and with a screw put into one that could not be done. The entire construction was obviously made that way because each one of the pawls can be operated independently for each spindle.

I will now turn to the British patent to DePass 10,405, of 1884, and state what that patent illustrates so far as is relevant to the Schletter patent in suit.

This patent relates to improvements of a machine known as the Dutch machine to make fancy knitted goods in several colors or split work and also the production of strengthening or reinforcing threads in the knitted portion, as shown by Figs. 1, 2, 3, 4 and 5 on sheet No. 1 of the drawings.

[fol. 419] This machine consists of a so-called driving saddle, as the patent names it, marked A. for the large main driving saddle, which is rigidly connected to an auxiliary driving saddle marked *a*. Both of them in the connected relation are shown by Fig. 6 on sheet 1, the lower right hand corner and they show clearly the so-called drivers fulcrumed to these two saddles, the purpose of these saddles being the taking along of the carrier in the well-known manner.

Now it has slurs *b* and *f* on the machine, and by slurs in this case are meant the inclines which release the carrier driver from its respective carrier. These slurs are provided with sliding pieces, b^1, b^2, f^1 and f^2 respectively. These sliding pieces which are in the form of angular bracket may be fixed by thumb screws operated by hand in such a way that they can engage or permit a pawl to come into engagement with a part of the machine to be described later, or out

of engagement. In this manner that machine is changed from narrowing to widening. That means two of these pawls on the upper part of the machine are set to widen while two corresponding pawls on the lower machine are set for narrowing. This, of course, has to be done by hand every time. That is the motion has to be stopped, these thumb screws have to be loosened and the pieces have to be re-set to get the respective pawls into operation. Now these pawls work in rack bars *j*. They can be very faintly seen on the extreme right hand of Fig. 7 directly under *k*. You can see the teeth there which constitute the rack bar.

There is also a rack bar on the lower end so that the [fol. 420] teeth are in exactly the opposite direction to these, and the two pawls which I mentioned some time ago work into these rack bars,—the upper one and the lower one. These pawls have two joints. They have one joint about which they swing as a whole and then the pawl in itself has a joint in the center part of the pawl again so that it could be swung up like this (illustrating) and the center part swung up like this and down again. That is done by two bars which are shown by Figs. 7 and 11. In these figures the bars can be seen engaging pins which are sliding in these bars and which are fastened to this center joint of the pawls.

There is a hand lever provided in Fig. 11 by means of which these two bars can be either moved apart from each other or toward each other. That means then that the center joint of these pawls which I have referred to are elevated if these bars are moved away from each other. When they are so lifted the outer end—the pawl end—by means of these lifting slides of course back on the teeth of the rack. Then when the hand lever is pressed down it gets hold of the next tooth of the rack, is pushed over to the extent of one tooth. In other words, in order to narrow the fabric it would be necessary to take this hand lever as shown by Fig. 11 and marked m^4 and pump it for the narrowing which is required. If, on the other hand a widening is necessary, then the pawls have to be reset, or when working in the racks narrowing have to be taken out of operation by the thumb screw which holds them while the other ones have to be put into operation, and then the same pumping [fol. 421] of this handlever has to be repeated to accomplish the widening.

Now in that way these designs which are shown in Figs. 1, 2, 3, 4 and 5 are made. That is, the main body is made

by the main carrier controlled by the main saddle as shown in Fig. 6 while the design is, of course, controlled by the auxiliary carrier in the manner as just explained, by either narrowing or widening by means of the racks provided for that purpose. The designs in Fig. 4 and Fig. 5 take three carriers. That is all that the machine has. And the main carrier and auxiliary carrier provided for that purpose makes the body and the one design and the auxiliary carrier the other design.

Now it will be noticed that the space between the reinforcing designs of the Figs. 4 and 5 is straight and of a certain width, and that is all that the machines can make. It can only make that particular form of design along a straight line and that is done by means of the heeler D which is shown in Fig. 7. The heeler D is nothing but one of these inclines that lifts the carrier out of its contact which is set stationary in the center of the machine, thereby taking the carriers always out of operation when you come to that center line from either side, this incline being inclined in either direction as clearly shown and causing the carriers to leave an open space in the center part of the stocking as shown, and either operation is, of course, entirely limited to that.

This machine is, as I said, of course not a full-fashioned machine and can not do any other work than described here, [fol. 422] and can not do it in any different manner. There is no reversely-threaded spindle. In fact, no spindle at all. There are no cooperating carrier rods nor any double work or any shadow clock work or any work of that kind can be done. There is no automatic motion to control cooperating movement of short stroke carrier rods, and the entire design could certainly have not suggested anything to Schletter in constructing his device.

Q. Will you turn now to the British patent to Mather 7,476 of 1837, and explain that device and its operation so far as relevant to the Schletter patent in suit.

A. That patent is an old hand frame with no provision for power whatsoever. All of the operations must be done manually. The frame is provided with spring beard needles and is arranged to make two stockings at the same time, by employing two tiers having loop forming parts, one on top of the other. This of course necessitates the duplication of

many working parts, although the sinker and similar parts are made out of one piece of metal operating together.

This machine has two sets of thread carriers, one set for plain work and an additional set for making heel tabs. The thread carriers are attached to an arm *b* which projects from slide piece *c,c* to which they are connected by hinges so that they can swing out of the way. That is, each carrier can either be swung into the path of the sinkers and dividers and the operating parts or can be swung out of the way if not desired for any operation. The pieces *c,c* are mounted upon a triangular bar *d*, along which they have a free sliding motion, which is clearly shown in Fig. 6. They slide along [fol. 423] this and there are notched tail pieces *e,e* provided which project from this sliding piece *c,c* and when the said carriers arrive at one of these tail pieces, they come against that inclined plane 2,2 or two tubular pieces *f*, which are mounted sliding on a rod *g* in Fig. 9, thereby force the bar away from the needles, and thus shorten or lengthen the stroke making the fabric narrower or wider as the occasion may be.

Now the bar *g* is supported by brackets 5,5 from a swing bar 41, and the tubular pieces *f* are controlling the length of the stroke of the carrier bar and are embraced by forks *h,h* attached to nuts *i,i* as shown in Fig. 10. These nuts are working upon two screws *k,k* which therefore may be used to lengthen or shorten the stroke of the carrier by placing these tubular controlling pieces *f* into the proper position. Upon this position as it is clear will depend the width of the work, for at this point the thread carriers will be released and fall, and stay the thread at whatever point these inclined planes are placed.

A ratchet wheel 16 is upon that end of spindle *k* in Figs. 6 and 7. This ratchet wheel is the one for the heeling screw, the heeling screw in this particular case meaning the screw which controls the widening and narrowing of the heel tab which this machine can make in addition to the regular fabric.

When the time for making the heel tabs has arrived the one carrier which has made the plain fabric so far makes the heel tab on one side while another carrier makes the heel tab on the other side.

[fol. 424] This particular screw is used to control the heel tab on the one side while the other screw controls the heel tab on the other side.

The handle 17 is furnished with a pawl 18 working into the teeth of ratchet wheel 16. 19 is a safety pawl retaining the wheel and preventing any return motion.

Now when the workman wishes to narrow his work he has to take hold of this handle and either draw it towards him or push it away from him to turn the spindle in which direction he wants to do it in order to produce the work which he intends to make.

This is somewhat the same way as the patent which we referred to some time ago but with the exception that this machine being much the older one there is as yet no provision made for narrowing by means of ticklers or narrowing points. The narrowing is accomplished by simply reducing the stroke of the carrier and laying thread over a lesser number of needles. Outside of these comments on these machines they are exactly the same as any similar types. They have no narrowing or widening; no carrier bars or reversely-threaded spindles or no automatic mechanism can be used for any design work and in this case have no bearing whatever, this being one of the first machines, anticipating even Cotton by a great many years.

Preference was made during the taking of the testimony by the defense to an attachment put out by the Textile Machine Works for making 2-needle closed slits, and there was a reference to a patent to Bitzer, which is in evidence as Defendant's Exhibit E, and one of your circulars which is [fol. 425] in evidence as Defendant's Exhibit C. I am of course familiar with the 2-needle closed split attachment, and I will now state briefly just what the relation between that attachment is and the attachment which I have described here as being put out under Schletter patent in suit.

I will say that they have nothing to do with each other. I mean the additional movement which has been added to the Schletter attachment does not in any way change the Schletter attachment as such. It is merely a supplemental attachment which can be or can not be supplied with the Schletter attachment as the customer desires. We have a similar attachment, but we are not supplying that as a matter of form with the Schletter attachment. We sell the Schletter attachment, and, in addition to it, if the customer wants it, we also sell this Bitzer attachment.

The Bitzer attachment is used in conjunction with the Schletter attachment as an added part. It is removable. It can be put on or taken off at will.

I have stated, that we sell the Schletter attachment without the Bitzer attachment.

I have caused to be compiled a list of the sales of the 2-needle closed split attachment, concerning which I have been asked, for the years 1931, 1932, 1933 and 1934. That is the list handed me, that correctly sets forth the sales according to our records.

Mr. Howson: We offer this in evidence as Plaintiff's Exhibit 53.

(Marked Plaintiff's Exhibit 53.)

[fol. 426] Mr. Howson: I might say, if the Court please, that there has already been put into the record a complete list of sales of the Schletter patent, so that with this the relative sales can readily be seen.

Mr. Miller stated that at the present time the 4-needle split, such as can be made by the Schletter attachment in your commercial form has been superseded by the 2-needle split which requires an additional attachment. The facts with reference to that, are as follows—Of course it is very difficult to estimate to what extent such alterations or such additions took place, but it is, I believe, a fair estimate when I say that about 95 per cent of the manufacturers make the 4-needle split and the rest the other.

I refer to the defendant's attachment as shown in the photographs, Plaintiff's Exhibit 2, and to the drawing, Plaintiff's Exhibit 34, which has been offered as plaintiff's drawing of defendant's attachment based on the stipulated photographs. Mr. Miller, defendant's expert, criticized this drawing on the ground that it did not contain certain additional parts necessary to make the device function for the making of 2-needle split as compared with 4-needle split. I will take these stipulated photographs and state what those photographs actually show, first with reference to the supposed addition to the 2-needle split supplement, and secondly with the character of work that is being done by the attachment.

These photographs show the additional attachment which is provided for the Schletter attachment to make a 2-needle [fol. 427] split on lines inclined to the wales and courses

of the fabric. Here is a photograph 10,041 in which the general arrangement of that device is very clearly shown; but it is also very clearly shown that it is not used in this method. It is disconnected; not only is it disconnected, but the four pins, which, as Mr. Miller quite readily explained, are necessary to make it operate successfully, are not even provided in that attachment. They are not there. Now it may perhaps be said that that is only working in one direction and therefore four pins are not necessary, but that is not so because the work on that machine as shown by photograph 10,019 clearly shows that this machine is a footer which is making—the fabric is right on the machine—which is making the cradle sole where a line inclined to the wales in opposite directions is necessary. Now that photo also only shows the two pins and is showing therefore very clearly that the people in this particular mill which had this machine applied to that attachment did not use it.

In making this drawing based on those pictures, I will state that in my opinion the drawing certainly does accurately show the attachment as actually utilized in the machine shown in those photographs. It shows the two pins and shows all the rest of the attachment.

In this condition with the 2-needle supplement unhooked, or not used, a 4-needle split is made by the attachment.

I am familiar with the 2-needle split attachment employed by the defendants as here. That is not the thing that is shown in the drawing as having been detached and [fol. 428] not used. I mean the same 2-needle split attachment that is illustrated in the drawing which the defendant has produced—I don't like to be misunderstood there. I did not say it has been removed. The entire attachment is on the machine, but the vital part of it, namely the connection from the operating arm to the pins which must be moved in order to get the 2-needle split, has been disconnected. It is still there but it has been put out of action, so the Schletter attachment proper is the thing that is there.

Q. What I want to find out is, as a practical matter, what this 2-needle split device as made and sold by the defendant, as they themselves have explained it, what relation that bears to an attachment consisting of auxiliary stops with a reversely-threaded spindle and an automatic selective and timing mechanism for operating those stops

in either direction? I want to know what this device has to do with such a device as I have described.

A. There is no direct relation whatsoever.

The 2-needle device of the defendant could not be used independently of or without securing it to such a device as I have described, as that set forth in the Schletter patent. The 2-needle attachment is an addition, simply an addition to such an attachment as I have described as that coming under the Schletter patent. It is a fact, with reference to the attachment, as defendants themselves have explained it, that when the attachment has been sold, the 2-needle split part of it can be used or not used at will in the manner illustrated in the drawings which are in the stipulation.

[fol. 429] I am referred to that part of the deposition of Mr. Miller in which he stated, with reference to the drawings of the patent in suit, that he was not able to understand the connection as shown in the drawings for operating chain 70. Mr. Miller suggested two reasons as to why he regarded these drawings as obscure. One was that cam 35a as he put it has a double function to perform; that is to say, not only to operate the lever which operates the chain 70, but also the operating mechanism for rocking the stops, and I am asked to state whether or not mechanically, if it is a matter of mechanics, if there is any such difficulty as Mr. Miller suggested. I will state there is none. Neither is there any difficulty presented by the fact that cam 35a must have that function. There is no difficulty at all. It is common to have a heavy cam used for two or three different motions. This particular cam is nothing but an eccentric, and on its turn where the eccentric strikes the roller of the pawling mechanism it simply lifts that pawling mechanism up and lets it come down again as it progresses in its motion. Then when this eccentric part comes to the lower side of the shaft of course the pawling mechanism has been completed and then this cam strikes the lever, this horizontal lever—it is not marked—and turns the ratchet which operates the chain 70 thereby selecting the pawl which is to operate when the next pawling mechanism takes place. This is, as I said, absolutely common. There is nothing unusual about it, and it operates very successfully.

I am asked to state whether or not in the model which has been produced, which is Plaintiff's Exhibit 11, the ar-

[fol 430] rangement of this cam 35a and the manner in which it performs the function is fully shown in the model in the way I have described. I will say yes, it is.

Mr. Miller made another point with reference to that drawing. He said that the theory with reference to the lever and its operation suggested in the plaintiff's model and suggested by himself to Mr. Howson while examining him, that the second reason why he had difficulty in seeing that was because he knew the thing would not work in a full-sized machine. I will state the facts in that regard: First, I will say that Mr. Miller is not right in saying it won't work; I know that because I have seen it work.

I will state what I have done or caused to be done to demonstrate that proposition. I have taken the Schletter attachment as it was in our possession formerly attached to the model which we used in Trenton and have built it into an actual machine in our experimental room which we have in almost constant operation, and with which we make stockings and which on the whole is operating very successfully, very nicely.

I have had a photograph made of the machine in question, and I produce it. I have here the photographs which show the attachment as applied to a regular 20-section knitting machine and successfully used on that machine for producing stockings of the type of the Schletter stocking shown in Fig. 10 in the patent drawings. These photographs are marked with numerals corresponding to the same parts in the Schletter attachment. So I think it un-
[fol. 431] necessary to go through these various parts. The machine is a larger reproduction of the model, Plaintiff's Exhibit 11. That is a full-sized machine operated under service conditions. It has been in operation quite a while; five or six months, I think. I am not exactly sure of the date on that, but quite a while.

Q. How has this terrible offset that troubled Mr. Miller so much, the distance between the lever in the front and the pawl in the back, how has that worked out in practice in the full-sized machine?

A. That worked out very nice. One has to consider there that the work that particular lever has to do is very little. Really that has nothing to do but to change those two light pawls in operation. That is either throw one out and leave the other in, or vice versa, and work of that nature does not

require very much power and therefore it is not necessary to have a very rugged and heavy construction there to do so.

The device, so far as concerns this lever connection for operating the chain 70, is not flimsy or likely to get out of order or lacking in sufficient accuracy. The accuracy is not so close, as was said here, because the chain links are comparatively long. It is true they are to be held as short as possible, but really all they have to do is bring the button under that lever and lift it up and whether that is a little this way or that way does not matter, especially since the changing of the pawls is done during a time the rest of the machine does not operate. There is really no accuracy required at all, and how that lever, the entire arrangement, [fol. 432] would operate, I think it would operate indefinitely as it works very nicely the same as any other part or connection in something similar.

Mr. Howson: I offer the photographs identified by the witness in evidence as Plaintiff's Exhibit 54.

(Marked Plaintiff's Exhibit 54.)

The Witness: During his examination Mr. Miller answered a series of questions to the effect that the attachment as shown in Schletter's patent would not operate at all because when the camshaft was shifted to the right in narrowing, there would be no support for various rollers, and so forth. I do not agree with that. I will state briefly why that is so. That is so for the simple reason that in the patent drawings the cams known as the narrowing cams are not shown. Now the narrowing cams are so essentially a part of the knitting machine that nobody would think of making a machine without supplying that machine with narrowing cams. As a matter of fact, even the machine which I have seen here on the floor, which is not provided with narrowing motion at all is provided with narrowing cams. That has absolutely become a second nature to the erector. He would not consider a machine complete that has no narrowing cams, because the machine could not operate.

I will state that the arrangement of the narrowing cams in the model, Plaintiff's Exhibit 11, is such an ordinary arrangement as would be used to take care of such a situation.

[fol. 433] Afternoon Session

OTTO HAMEL, called as a witness on behalf of the plaintiff, being duly sworn, testified as follows:

Direct examination.

By Mr. Shaw:

The The Witness: My age is fifty; I am a full-fashioned hosiery manufacturer; residence is at Wyomissing, Pennsylvania. I am associated with the Meinig Hosiery Company. They are located in Reading. I am treasurer of the company.

My experience in the knitting industry is as follows: I started in as a youngster as a helper on knitting machines of the full-fashioned type, then became fixer, then foreman, and manufacturer. The duties of a fixer vary. My duty in the main was to keep the machines in running order. That involves the mechanical adjustment of the various parts of the machines and the replacement of parts from time to time.

I am familiar with the Schletter patent in suit.

I will take a copy of that patent and look at Fig. 1. I understand that a question has arisen in this case with regard to certain of the cam rollers, such as the cam roller in contact with cams 45 and 51, as to what would happen during the narrowing when the camshaft is shifted to the right. As a practical man, I will make some comment on that. It is perfectly natural that a second cam must be included with every cam on a knitting machine. There is a working cam, and a narrowing cam that would naturally be included in the machine to do that, which is not shown in the drawing here. [fol. 434] I take it for granted that the drawing shows the attachment, not the knitting machine itself. In each place where there are rollers to be in contact with cams on the main camshaft, there are two cams employed. The functions of those two cams are as follows: One cam takes care of the idle motion and the other cam is doing certain work. In other words, when the machine is narrowing, the camshaft moves to the right and the roller would then engage with the other cam. It is not necessary that those cams should be placed, some on the narrowing side and some on the work side. I do not find any narrowing cams in Fig. 1.

The question has also been raised as to the operation of cams 35 and 35a and 34 and 34a when the narrowing takes place. The specification points out that the attachment with the reversely-threaded spindle should operate during the narrowing. I will comment on that. That would be perfectly natural. If the narrowing cam is on there, the roller will then act on the cam and those levers will not operate, but will remain idle.

There has also been some discussion with regard to the operation of the back pattern chain 70. The specification points out that the chain shall be operated by step-to-step movement from the main camshaft through the lever by cam 35a. I understand the mechanism shown in Fig. 1 for operating the back pattern chain 70.

My attention is called to the fact that Fig. 3 of the patent, which is a sectional elevation view, does not show any mechanism. The absence of that mechanism in Fig. 3 does not prevent you from understanding the mechanism shown in [fol. 435] Fig. 1. I think it is very clear in Fig. 1. The connection is shown there. I will describe that connection from the operation of the chain. The chain 50 being supported by the pawl wheel 54, supporting buttons 55, these buttons and the chain move around one link every fourth, and the buttons will eventually come to lever 56, raising lever 56, raising lever 60, releasing shaft 42, and the shaft 42 being pulled to the left by a spring 43, that, in turn pulls shaft 41 to the left, and that horizontal lever being directly connected to the shaft is pulled over and comes under cam 35a, is depressed on the left, and consequently being pivoted on the right end, comes to the pawl on the back of the machine.

I have seen a knitting machine where such a connection was employed. I refer to the machine, photograph of which was introduced before lunch by Mr. Meyer as Plaintiff's Exhibit 54. That is the machine. I saw that machine operated four or five times. I saw stockings or stocking blanks manufactured on that machine.

Q. From your observation in that connection which you have described, between the camshaft and the back chain 70, what would you say with regard to its operation?

A. Why, it operated very successfully, and I think that it would work that way indefinitely. It is a practical connection but could be improved.

I am familiar with the use of two kinds of sinkers, long nosed sinkers and short nosed sinkers. At the present time we employ both long nosed sinkers and short nosed sinkers. We employ the short nosed sinker to prevent loop stepup from the cradle sole in the manufacture of ladies' full-fashioned hosiery. That would be spliced or reinforced in [fol. 436] the cradle foot when we employed short nosed sinkers. Those stockings which we manufacture, are sheer—that is fourth grade. In the manufacture of the cradle sole of our footers, all the machines have the short nosed sinkers. We are operating 28 footers with short nosed sinkers. Those short nosed sinkers that we are employing are similar to G^1 shown in Fig. 3 of Defendant's Exhibit H-1.

The Meinig concern employs altogether 120 machines. We do not have any difficulty in manufacturing stockings with the short nosed sinkers; none whatever. We do not have any difficulty with regard to the avoidance of streaks when we use short nosed sinkers. They are not apparent. I produce a sample stocking in which the cradle sole is made with the short nosed sinker.

Mr. Shaw: The witness produces a stocking which I offer in evidence and ask to have marked Plaintiff's Exhibit 55.

(Marked Plaintiff's Exhibit 55.)

The Witness: In the manufacture of that stocking we used a Reading full-fashioned footer and legger machine. There was an attachment employed in which there was a reversely-threaded spindle with stops capable of automatic movement in both directions. There were 40 needles of the needle bed which were associated with the short-nosed sinkers on each side of the foot. In the use of short nosed sinkers, we do not have any difficulty with regard to the selvage.

Mr. Shaw: You may cross-examine.

[fol. 437] Cross-examination.

By Mr. Darby:

The Witness: We used short nosed sinkers at the stepup portion. They are referred to as short nose sinkers and not selvage dividers. Those are straight short nose sinkers.

I know the difference between short nose sinkers and selvage dividers. For the sake of the record I will explain the difference between them. I have it right here. This is a selvage divider.

(The device labeled H-1 in Defendant's Exhibit H-1 is referred to by the witness as a selvage divider.)

Q. Now, I understood you to say that you are familiar with the Schletter patent and its operation. I am interested now in its operation shown in the drawings of the patent, and I understand that from your description of its operation, when it is desired to rotate the reversely-threaded spindle, a button on the chain moves the lever 56 out of the way and the spring 43 then moves the rod 42 to the left; is that right?

A. Correct. The rollers 30 and 31 are carried by the vertical arms 40 and 41 to the left, so that they come in contact with the cam surfaces 34a and 35a.

Q. And how far does the rod 42 move to the left,—the width of the lever 57, is that correct?

A. Yes, I think it is 9/16ths of an inch.

Q. The width of the lever 57?

A. It is the width of the offset of the lever.

Q. So that when the stop or bracket or nut or whatever it is, labeled 59, comes in contact with the device 58, that is the end of movement 42?

A. That is right.

[fol. 438] Q. And therefore the roller 30 and the roller 31 moves 9/16ths of an inch into cam relation with the cam surfaces 34a and 35a, is that right?

A. That is correct.

Q. And similarly when the camshaft 5 is moved to the right during narrowing, the rollers 30 and 31 likewise come in operative position relative to these cam surfaces 34a and 35a, right?

A. Yes.

Referring to the stocking, Plaintiff's Exhibit 55, that is a spliced stocking.

Q. So you are not making any herringbone or other sutures with the short nosed sinkers that you have referred to?

A. With a cotton sole.

Q. There is no herringbone or other suture in these stockings?

A. Not in that one, no.

Mr. Darby: That is all.

Redirect examination.

By Mr. Shaw:

Q. Mr. Hamel, what can you say with regard to the width of the narrowing cam employed in this device with relation to the working cam?

A. The width of the narrowing cam is the same width as the working cam.

Q. Among the duties of a fixer, does the examination of that fall within the province of a machinist, in fixing?

A. That is natural, if the machine is built that way.

I am not connected in any way with the Textile Machine Works, plaintiff in this case. My company is not connected with it. It is entirely independent. Neither myself nor my company is interested in the outcome of this controversy.

Mr. Shaw: That is all.

[fol. 439] Ralph H. Greiss, called as a witness on behalf of the plaintiff, being duly sworn, testified as follows:

Direct examination.

By Mr. Shaw:

The Witness: I am forty years old. I live at 314 South 17½ Street, Reading, Pennsylvania, and I am a machinist for the Textile Machine Works, the plaintiff in this case. I have been employed by the Textile Machine Works for sixteen years on December 1st. During that period I have been employed as a machinist. Within the last two years I was promoted to experimental engineer.

Mr. Meyer produced certain photographs which have been offered in evidence as Plaintiff's Exhibit 54, showing a machine which has a spindle attachment thereon. I will tell what I had to do with that machine. With this particular type of machine, I had taken the parts—I think the parts

were ones we had in the model in the Trenton case—I was told to take the parts off of this model and place it on a 20-section full-fashioned machine which we have in our experimental department. I put that on and got it into operating condition. Nobody told me to put narrowing cams on the attachment. I did it in order to make the attachment work, you had to have narrowing cams, if you wanted to make any fabric off of that.

I said that I have operated the machine. The machine itself I would say was working about four days straight and then it was laying idle except when people came to [fol. 440] look at it off and on, when it was operating. I would say approximately a total of about a hundred hours. Stocking blanks were manufactured on that machine. It operated satisfactorily. The knitting speed which was employed in the manufacture of the stocking blanks was about 40—45 courses a minute, I would say.

As to how that speed corresponds to the speed of knitting employed on full fashioned machines in 1921 and 1922, I will say that this type machine is not our latest type of machine. It is a very old machine. It is a long needle machine. I would say this particular machine could not run no more than about 50 to 55 courses at the most.

Q. You did not quite answer my question. Do you know what the knitting speed of a full-fashioned hosiery machine was in 1921?

A. That is more than I could say—about 50, I would say.

Q. I call your attention to the connection as shown in the photographs connecting the cam 35 and 35a with the rear pattern chain, particularly as shown in photograph 10,333; what have you to say about that connection?

A. What is the number of the lever?

Q. Lever 35, and that goes to the back pattern chain 70.

A. Well, I would say that that was very practical.

I did not have any difficulty in accurately moving the back pattern chain 70 when I was operating that machine. The machine illustrated in the photographs is practically the same thing as the model, Plaintiff's Exhibit 11. The [fol. 441] little model is the same thing as the attachment that is on here. I spoke about the fact that we got the parts of the attachment from a model. I don't know no more than hearsay whether that model was ever in Trenton or not.

Q. When you took the parts off of the model, how was the connection shown in photograph 10,333, between the cam 35a and the back pattern chain, was it the same as shown in the photograph or was it different?

A. No, it is the same there; the same as shown on that.

Mr. Shaw: You may cross-examine.

Cross-examination.

By Mr. Darby:

Q. Did I correctly understand you to say that you understood that the attachment as you acquired it was the attachment as was used in the model in the Trenton case?

A. As much as I know, yes.

Q. And then did I understand you to say that the mechanism on the attachment as you got it was the same as is illustrated in the photographs at the presenet time?

A. Well, I will say that the motion when I placed the narrowing cam in there, I had to change one cam there, to give me a double movement. In other words, when I placed the correct maximum that had been on one cam as 9/16ths of an inch, but when I added that other cam I had to make that move still another 9/16ths or a total of——

Q. An inch and an eighth?

A. An inch and an eighth, yes, sir.

Q. Just where did you add that other cam, referring [fol. 442] to Fig. 1 of the patent in suit?

A. On the right side there. It doesn't matter where you place it as long as you shift your levers over to make that movement.

Q. No, I am interested in exactly where you did place it; can you show me on this drawing?

A. The cam was placed on this side. That is, the cam was placed to the right of the device marked 34a. That is not the only change that I made. The other change was that lever 57, in order to make that move that additional 9/16ths of an inch— I had to weld a piece on there in order to put that collar out that far in order to give me that extra 9/16ths movement.

It is correct, that in the model machine as I received it, it had the mechanism such as is illustrated by the letters A, B, G and this rod C. I put that mechanism on that machine. I did not put that mechanism on the model in-

itially. I do not know whether the model was in operative condition when I received it. And I do not know who did put that mechanism on the model, or when it was put on there. I have no idea when it was put on there.

I am shown photograph of a machine appearing on page 179, Volume 2 of the Record on Appeal, and am asked if that was the machine or the model which I received or concerning which I have testified. I will say—Yes, that is the model that I had taken it off of. As far as I can see it is exactly in the same condition now as it was when I received it to do this work.

My attention is called to the mechanism for imparting [fol. 443] movement to the chain 70 and I am asked to compare it and see if they are the same. I will say that that is not the same.

Q. Therefore there appears to be a slight inconsistency in your testimony, and I would like to be placed right. In this model as you received it, what mechanism was provided for actuating the chain 70? Is it as shown in this drawing, Plaintiff's Exhibit 15, or is it as shown in that photograph?

A. It is like that shown in the drawing. The model as I received it was not provided with the mechanism as illustrated in that photograph.

Q. My statement is correct, then?

A. Yes, sir.

Mr. Darby: I would like to have the photograph marked for identification.

(Marked Defendant's Exhibit G-2 for identification.)

Mr. Darby: I think that is all.

Redirect examination.

By Mr. Shaw:

The Witness: Mr. Darby asked me about the cam that I added to the right of cam 35a; that cam was one of the cams I mentioned that I added without being told to do it. It is just a round disk, a round cam. When the cam shaft is shifted to the right that cam merely goes on another round cam and does not work; it is inactive.

Mr. Shaw: That is all.

[fol. 444] CHRISTIAN F. MEYER, resumed the stand.

Direct examination continued.

By Mr. Howson:

The Witness: Mr. Miller during his examination at page 238 of the typewritten record was asked this question:

"Q. Do you understand the necessity in a device like the patent in suit remaining stationary, inoperative while narrowing is being effected? A. Yes.

"Q. Do you agree that it is absolutely necessary to have the reversely-threaded spindle 11 of the patent in suit remain stationary while work is being effected? A. Yes; do you want me to state the reason?"

Then he was asked:

"Q. In the structure as shown in the patent in suit, insofar as it is described in the specifications of the patent in suit, does the spindle 11 remain stationary during narrowing, or is it racked during narrowing? A. It is racked."

I will state what I have to say with reference to that.

I must say that it is not racked. Schletter even provided a special safety device to prevent such racking during narrowing operations, and the device is shown by Figs. 11 and 12 of the Schletter patent drawings and which were [fol. 445] described during my deposition in connection with the description of the machine. I understand Mr. Miller's testimony to be based upon the thought that the attachment will be built without narrowing cams. That is the only explanation.

Referring to the Schletter patent 1,531,349, which was put in evidence by the defense or by ourselves, as the case may be, I will state what character of work is involved in the clocks shown and described in that patent; that is to say, whether it is split seam, splicing, or reinforced work, I will say that that is ordinary splicing; that is, an additional thread laid on the bottom of the fabric. That is very clear. This type of work is usually referred to as "splicing". That is the general term used; it is practically the same as reinforcing.

With the attachment shown and described in the patent in suit, I have testified that if the stops are rocked, that

will make an open split, and if held stationary, that will make a closed split. I will now state how they would be operated in doing splicing work. In doing splicing work they would simply be put stationary, that is the racking machine. It is possible in this that the stops would be eliminated so they become stationary stops.

Mr. Miller, in one of his answers said that in order to do splicing work it would also be necessary to put in a plain stop, that is, eliminate the undercut. That is not necessary. Mr. Miller, in his own designation of the stop, which he said was used by Schletter, admitted that it is not necessary. He says that the first two needles over- [fol. 446] lap and the second two needles make the herring-bone split, but if the first two needles do overlap, it must have been done against the stationary stop and that is the stationary stop that is later used for the open split, too.

Mr. Miller testified at page 276 of the record—I think it was in connection with a discussion of the Zwicky patent that the variable rocker motion is necessary in order to manufacture the modern stocking where splicing or split seam work is performed, in order to produce a commercially salable produce, and the object of the Zwicky patent was to provide such a rocking motion. I will state that rocking motions of that character were in use long before the Zwicky patent originated. For instance, in connection with the reinforcement work done on the rocking attachment in connection with the pointex heel, the use of a rocker motion, too, is involved. The Textile Machine Works itself long prior to the Zwicky patent furnished variable rocker motions.

Q. Can you, with reference to the patent which I now hand you, Cecka patent 1,213,333, indicate what such rocker motion was?

A. Yes, this is a variable rocking motion which is to be used for that very purpose, that is, to rock the part of the needle bar to vary with the design as the fabric is being manufactured.

So far as the Zwicky patent is concerned, that was a delayed improvement in such rocker motions. Originally the old rocker motions were operated from the cam shaft; that is, the cam shaft with so-called cam pieces on it which corresponded to the length of the part that was to [fol. 447] be rocked would revolve on the cam shaft. As the

machines got longer, there developed a certain twist in the cam shaft and since this motion must correspond with the carrier motion it sometimes happened that they were not quite parallel to each other, so to speak, that the rocking started a little earlier than it should because the twist in the cam shaft detained it. Then Zwicky made a device where this variable rocking was originated from the Coulier motion, so that they would absolutely work at the same time so that this little defect which sometimes developed could be eliminated, but in principle it was exactly the same as the older motion of that nature.

Q. And whether or not for the purposes of use with the Schletter attachment or the reinforced selvage attachment with reverse motion as put out by you, the rocker motion of the type which you described could be used?

A. That would not make any difference. Any rocker motion could be used.

Mr. Howson: We will offer this Cecka patent 1,213,333, in evidence.

(Marked Plaintiff's Exhibit 56.)

Mr. Miller made a statement in connection with the Gotham device shown in connection with the British patent that he was discussing, that in order to change that device to a device with a two-way motion, all that would be necessary to do would be to add another pawl or pinion, a selective mechanism, a timing mechanism and so forth, and that [fol. 448] is all; I will state very briefly what the nature of the problems were which were involved in connection with full-fashioned knitting machines in which the device was to be used.

As far as the statement by Mr. Miller goes, that is true partially. First, we would have to add a selecting mechanism which, of course, would have to cooperate with the timing mechanism and we would have to make some provision to prevent the narrowing during the operation of the Schletter device because it would be disastrous if those would operate together. Then we have to make provisions so as to enable us to make all the various designs that Schletter had to do; in the devices to which you referred, there are only provisions made to stop two carrier rods, and as they are shown and as they were operated, it would be impossible to make the designs which Schletter had in

mind and which he actually made with his attachment. All of that had to be considered and had to be made before one could say that the attachment would be operating the same as Schletter.

It is a fact also as far as the Schletter attachment is concerned that it required the location of the selective mechanism in connection with the point in the device where the reversely-threaded spindle had to be placed.

Mr. Miller criticised the model, Plaintiff's Exhibit 11, because it had bumps on it instead of a chain. That is not a matter of criticism from the standpoint of the model. In fact, that would show exactly the same as if that were on a chain, because anyone would understand, it is very [fol. 449] difficult to make such a small chain, so we just put that on as a substitute. It does not matter in the mechanism where the bump is on the chain or on a wheel. On a full sized machine, we use wheels, and not a chain.

Mr. Howson: If the Court please, I have concluded with the examination of Mr. Meyer so far as the expert testimony is concerned, but there are certain facts that I want to have him examined about and I have asked my colleague, Mr. Shaw, to examine on that phase of it. You have no objection to that, Mr. Darby?

Mr. Darby: No objection.

The Court: Very well.

By Mr: Shaw:

The Witness: I know Richard E. Schletter. I first learned of the attachment of the patent in suit in the beginning of 1921. The circumstances under which I learned about it were as follows: Schletter came to us in the Textile Machine Works and told me about this invention of his and asked our assistance to work out the necessary drawings and specifications with the aid of a patent attorney in Reading. Because of that being the fact, he wanted us to help along and therefore wanted an attorney that was located near the Textile Machine Works. Mr. Schletter brought certain stockings with him at the time of that first visit. I identify Plaintiff's Exhibits 17, 40 and 44, as the stockings or stockings exactly like the ones Schletter brought along.

[fol. 450] I had certain of the stockings that Mr. Schletter brought with him, photographed. Plaintiff's Exhibit 41

are the photographs to which I just referred. They were taken on the date which they bear, namely, on March 21 1921.

As to what Mr. Schletter told me about the attachment when he first came to Reading early in 1921, I will say that Mr. Schletter was very much enthused about that attachment. He spoke to me of the great many possibilities that that attachment had; that one could make almost anything that came along with it, and he had great expectations concerning it.

He did not state that the particular type of seam shown in these exhibits, Plaintiff's Exhibits 17, 40 and 44, were all that he contemplated. He did not state that. He stated he could make any kind of work, any kind of seam, any kind of spliced work or split work. I have seen an attachment that Schletter himself had built. That was in the Brentmore Knitting Mill, just about the same time. Schletter ased me to come over and see it. I cannot say whether it was a little before or after the time, but around that time.

I will state what mechanical parts were embodied in that attachment at Brentmore, as I now recall them. It consisted of a reversely-threaded spindle, nuts, a number of cooperating carrier rods provided with abutments to bear against the stops of these nuts, then there were two ratchets, the piece being cut in opposite directions, two levers, and I remember there were chains, and of course other details [fol. 451] which I cannot exactly recall right now. I did not see the device in operation. I did understand how it operated. Schletter and I discussed that.

Referring to Plaintiff's Exhibit 44, I will state that it certainly could be manufactured by the attachment, by the wide center part being controlled by an abutment working between the two special stops and the two end parts respectively right or left against these stops and against the end stops from either side.

As to what the Textile Machine Works had to do with the application which was filed and marked in this case as Defendant's Exhibit K, I will say that we made the patent drawings for that application under the direction of Stewart. Stewart was making the application and we were merely aiding Schletter in getting it through. Mr. Stewart was the patent attorney in Reading to whom Mr. Schletter gave this device of his to apply for a patent.

A draftsman was sent from Reading to the Brentmore Knitting Mills. The draftsman was Mr. Albert Friedman. He is the same Albert Friedman who testified for the defendant in this case and stated that he was now sales engineer of the defendant company. The testimony of Mr. Stewart shows that on a certain date, February 11, 1921, I and Mr. Schletter went to his office and Mr. Schletter explained the invention to him. I remember that conference. Mr. Stewart also testified that from time to time the Textile Machine Works and particularly myself cooperated with him in the Schletter matter to file the applications. That is a fact. We did that right along for Schletter.

[fol. 452] Application Serial No. 569,559, Defendant's Exhibit K, was abandoned. I will state under what circumstances I first learned of the abandonment of that application. The first I heard of it was from Schletter himself. Schletter was very much excited about it because he told me he had not known anything about it and he asked me whether I had. That communication from Schletter was oral; it was not in writing. Prior to that time I had received no word that the application had been rejected and was awaiting amendment. I did not receive a copy of the official letter of April 18, 1923, from Mr. Stewart. I never saw any of these.

Q. Mr. Stewart also testified that he had a conference at the Textile plant with you and Mr. Schletter and some other man on August 6, 1924; do you remember that conference?

A. Perhaps that was that very particular one. We had conferences quite often at that time. That particular conference took place after the application, Defendant's Exhibit K, had become abandoned; there was nothing that took place at that conference that indicated to me that the application had become abandoned. There could not have been, because as I stated before, the first news that I had of that was from Schletter himself.

After the application which became abandoned was filed on June 19, 1922, and after Schletter had been up to see me in 1921, the matter was left between myself and Schletter in such a way that Schletter promised to follow up his application and in the meantime to try to put that attachment [fol. 453] in a form for commercial use. That took quite a while before any development came from his side, I think

around 1923-1924, we ourselves at that time did not experiment with that attachment because Schletter had taken out an application to do that himself, but being so slow in this particular work, he took this experimentation over to the Textile, because at that time, I think it was at the end of 1924 or the middle of 1924, we had established our own experimental room, which we did not have before that time.

Then after we got the attachment into our experimental room, we also could not make very much headway because we were extremely busy at that time. It was the time when we were way back in our deliveries and it was the policy of the Textile Machine Works at that time to hold new attachments and new devices back as long as we possibly could in order to put out our standard machines and our standard goods, but the attachment developed gradually. It took, of course, quite a while to tool it for commercial exploitation, until in the middle of 1927 we were ready to bring the attachment out and we did so, as a matter of course, the same as we bring out any new attachment that we manufacture.

That is all.

Cross-examination.

By Mr. Darby:

The Witness: I have remained friendly with Schletter all this time. Mr. Schletter is still living. The last time I saw him was several months ago. I think he lives in [fol. 454] Philadelphia. When Mr. Schletter came to me with that attachment in 1921, and he was very enthused about it and said it could make anything, I shared his enthusiasm. I thought it could make anything. I at once saw the value of that in the hosiery industry. I also appreciated at that time in 1921 that that attachment applied to a full-fashioned machine that could make anything, would be received enthusiastically by the industry as a whole.

Looking at it from the viewpoint of the plaintiff company here, the Textile Machine Works, I was of course not unmindful of the fact that the profits of the Textile Machine Works in supplying such an attachment would be considerable.

Q. And of course you realized as soon as you began making and selling these attachments, your profits in the manufacture and sale of them would begin?

A. A profit in a different direction. That does not mean, Mr. Darby, that we did not have profits at the time.

Q. No, I am not implying that for a moment. When you say profits in a different direction, you mean profits from the sale of these attachments?

A. No, I mean the sale of attachments—standard attachments.

Q. As well as these attachments?

A. These attachments were not ready.

Q. You testified concerning the attachments that you had sold prior to that time for making the pointed heel on the reversely-threaded spindle type, and I want to focus your mind on that. How long before Schletter brought [fol. 455] this attachment to you had you been making and selling the reversely-threaded spindle structure for making pointed heels?

A. Roughly speaking, nine to ten years.

Q. That was a reversely-threaded spindle, was it not?

A. It was.

Q. And it was sold as an attachment for application to full-fashioned knitting machines?

A. It was.

Q. And it was in addition to the narrowing mechanism?

A. That is true, yes.

Q. And it was in addition, likewise, to the reversely-threaded spindles that you employed for controlling the carrier rods at the same time to narrowing the work?

A. We did not employ reversely-threaded spindles for controlling the carrier rods.

Q. You employed spindles for that, didn't you?

A. Yes, but not reversely-threaded spindles.

Q. Then I will repeat my question and limit it just to spindles. These attachments that you supplied for making pointed heels were in addition to the reversely-threaded spindle that you employed for controlling the narrowing needles and in addition to the bedded spindle or spindles that you employed for diminishing or traversing of the thread carrier at the selvage edges?

A. That is true.

Q. That is correct. And this reversely-threaded spindle attachment was located at what part of the machine?

A. At some inside section of the machine. I mean by that at some place between the ends as distinguished from at the ends.

[fol. 456] We did not sell those attachments only for application to the knitting machines of our manufacture. I have seen that attachment applied to other machines. I saw it applied to practically any machine of foreign manufacture. I include Schubert & Salzer and Carl Lieberknecht machines. At that time, namely, in 1918, there were six or seven thread carriers supplied with our machines as we sold them. This number of thread carriers were supplied so that the manufacturer can use all those thread carriers and carrier rods for making different types of stockings. Likewise those carrier rods were all provided with stops. They would have to be.

Q. Those stops are adjustable, are they not?

A. They are not.

Q. Do you mean to say that the carrier rod is provided with permanent stops?

A. I must give you a short explanation in order to make clear what I mean when I said that.

Q. All right, I would like to have that.

A. The stops are adjustable insofar as a very short adjustment can be made by means of a stop screw which are provided in these parts, but they are not adjustable when you talk about their position on the carrier rod.

Q. Describe the nature of the device that was provided for each carrier rod by which an adjustment of its movement could be obtained? Do I make myself clear?

Mr. Howson: Excuse me a moment. I object to this cross examination going further along this line on the [fol. 457] ground that it is not germane to the direct examination.

Mr. Darby: Oh, if the Court please, I think this certainly is. This witness has gone through the entire gamut of the prior art and likewise he himself in his direct examination has gone into the structure that was sold by them before the Schletter attachment—and this has a direct bearing on it.

The Court: What is the last question?

(Question read.)

The Court: Do you mean on the original machine, without this new attachment?

Mr. Darby: Yes, sir. In other words, what I am developing—I will tell the Court quite frankly as well as Mr. Howson, I want to crystallize the difference between this old attachment and the new attachment, and in cross examination, of course, I can only do it step by step.

The Court: I don't know but what it could not be done all at once. You can ask him to point out the differences between the two.

Mr. Darby: He can if they had carrier rods that were a necessary part of it. But what I am trying to develop by the witness now is the particular device, whether it was a nut or screw that you turned on with a screwdriver or whether you positioned it on the carrier rod, and whether you can position it at will; that is what the question is directed to. So far as the attachment itself is concerned, [fol. 458] your Honor will recall that the carrier rods are not part of the attachment; that is the difficulty of it.

The Court: Then why is it material in this case? In this case you say it is an addition to that, over and beyond that—something that has been put on after all these rods have been put on.

Mr. Darby: Yes, sir.

The Court: Why is it material to this issue then? The question is, whether what you had before and the adding of this to the machine—putting this particular attachment on when this patent was granted, constitutes the invention, or whether the device that it covers is in itself an inventive device.

Mr. Darby: That is certainly one of the issues.

The Court: What difference does it make then about something that is admitted by both sides?

Mr. Darby: It makes this difference, if the Court please: in considering some instances in the prior art, I was seeking to avoid every instance in the prior art in asking this witness questions about it—but in considering some instances of the prior art the witness pointed out in some cases only two carrier rods. In the patent in suit, for example, your Honor will recall that there is a prescribed number, but there are only three carrier rods shown. I had reached the point of establishing that machines were

supplied with any desired number of carrier rods as the [fol. 459] basis for an argument on the insufficiency or sufficiency as the case may be of the witness's attempt to distinguish certain cases in the prior art. Now I am coming to another point that I did not expect to lead up in this way, but in view of the objection I have to. One of the questions in the prior art was this question of opposed stops.

The Court: Suppose you proceed with that. If you say that is your purpose, I think that is probably a legitimate inquiry.

Q. For that purpose I wanted to establish that these carrier rods, if the witness will agree with me, that these carrier rods with which the machinery was equipped, are also provided with some devices to be attached to the carrier rods in a stationary manner which will abut against the stops of the attachment in their movement, is that correct?

A. No, that is not correct.

Q. All right, what were the carrier rods provided with for that purpose?

A. For the purpose to work with the attachment.

Q. For the purpose of working with the old attachment?

A. Correct.

The Court: Not with the device that is under controversy here?

Mr. Darby: Not with the devices under controversy.

The Court: The old attachment.

Q. What were the carrier rods provided with to permit a stop in their travel?

[fol. 460] A. Those carrier rods that we were working on were provided with an attachment for that purpose, having suitable abutments.

Q. Were they formed integrally with the abutments or adjustable with the abutments?

A. They were permanently affixed wherever they were located for that particular purpose. They were not held in place by a screw; they were held in place by rivets.

Q. Were the abutments on those carrier rods located at different places; that is, were the abutments on each carrier rod exactly the same or were the abutments located in different places on the different carrier rods?

A. They were located at different places. I am still referring to this prior attachment of ours which was provided with automatic mechanism for rotating the spindle in one direction. That automatic mechanism was chain-controlled.

Q. Was there anything in the structure of the attachment which would prevent the carrier rod—one or more carrier rods being stopped on the inside of the stops mounted on the spindle as distinguished from the outside of those stops?

A. In the attachments we made, there was.

Q. What was there to prevent, if so desired, a carrier rod being controlled from the inside, between the inside surfaces of the stops as distinguished from abutting against the outside, if it was desired, by the manufacturer?

A. It simply was not desired.

Q. It wasn't desired?

A. No.

Q. There is nothing, as far as the structure is concerned, that would prevent it, is there?

A. Naturally not.

[fol. 461] Q. I want to ask you, Mr. Meyer, specifically, am I correct in this statement that the difference between the attachments that you sold prior to the Schletter patent in suit and the attachment that you sold after the Schletter patent in suit, beginning in August, 1927, was the provision of the selective mechanism and the actuating mechanism to enable the reversely-threaded spindle to be automatically operated in both directions where theretofore it had only been operated in one direction automatically, is that a fair statement?

A. To a certain extent, but that is not all. There was first a necessity to prevent the operation of that attachment during narrowing——

Q. Could I stop you there for a minute. We will come back to that. I will ask you to continue the story later. In this prior attachment of yours, prior to the Schletter period, as to the reversely-threaded spindle operating in one direction, was that permitted to operate automatically during narrowing?

A. We saw no necessity to prevent it.

Q. Was that permitted to operate during narrowing?

A. It was not operating.

Q. It was not operating during narrowing, is that right?

A. No. But it was not operating for one particular reason; that the work that could be done on it and the only work that could be done with it happened to be in that position on the stocking where no narrowing was required.

Q. In making the pointed heel, is that what you refer to?

A. That is what I am referring to.

[fol. 462] Q. And were you familiar with the attachment for selvage reinforcement?

A. We never used it for that purpose.

I am familiar with that attachment for selvage reinforcement. If the selvage reinforcement does take place at the narrowing it is correct that then you must not allow the reversely-threaded spindle to be actuated by the machine while narrowing is taking place.

Q. So for the same reason that you do not want that spindle 11 to operate in the patent in suit while narrowing is taking place, you do not want and did not want the spindle of your prior structure for making pointed heels to be actuated while narrowing is taking place, is that correct?

A. That is a little bit different; more of a difference, Mr. Darby.

Q. Will you answer my question first and then go ahead and make any explanations you want.

A. That is partly correct.

Q. I did not want to shut off your explanation.

A. Only when you make a reinforced selvage; you made the same width throughout the entire stocking and there is no difficulty to place your respective buttons so that no narrowing interferes with that. When, however, you make a design and your stops and controlling means move in different directions it is very much more difficult to avoid such a placing of the buttons in the wrong place and it is much more important to provide a safety device such as Schletter did.

Q. As a matter of fact, you called this prior attachment of yours the "reinforced selvage attachment," didn't you?

A. We did.

[fol. 463] Q. So that one of the purposes for which it was sold was to reinforce the selvages, is that right?

A. That is not right, no. That seems to be a paradox, but it is so.

With reference to this particular drawing, Plaintiff's Exhibit 15, I know who worked out this arrangement of apparatus, A, B, G and C. Schletter did it. It was the draftsman who made the patent drawing who first showed it in this fashion. It was Mr. Friedman.

Q. Then you would not agree with me in saying that Mr. Ischinger was the one first to work out this particular arrangement?

A. Not in the way you put the question to me, no.

Q. Well, apparently there is some limitation that enables you to answer it that way. Who was the first one who figured out that the structure shown in Fig. 1 could be operative if arranged in this fashion as shown in Fig. 15?

A. Why, Schletter again. There is nothing to figure out.

Q. And I want to clear up one more thing in connection with this: it is a fact, is it not, Mr. Meyer, that if the mechanism shown in Fig. 1 of the drawing is as you have illustrated it in your perspective drawing, Plaintiff's Exhibit 15, a view taken on the line 3-3 of Fig. 1, and looking in the direction of the arrows would show the mechanism A and B, would it not?

A. In an entirely correct drawing it would, yes.

Q. And Fig. 3 of the patent in suit which is described as being a sectional view taken on the line 3-3 of Fig. 1, and looking in the direction of the arrows, does not show any mechanism of that character, is that right?

A. No. That is not quite right.

[fol. 464] Q. All right. Turn to Fig. 3 and show me where it shows any mechanism of that character?

A. Fig. 3 shows the shifter arm, I think it is 42—that is not marked on that view——

Q. But it is the arm corresponding to arm 41 of Fig. 1, is that correct?

A. Yes, that is correct, and it shows on the rear side of the machine the pawl that is attached to the ratchet intended and designed to drive the chain 70. These two parts are shown in the side view of Fig. 3.

Q. But none of the mechanism that I have identified as A, B, G or C is shown, is that right?

A. Not in the side view, no.

Q. And if it was a correct side view, and if it was taken as stated on the line 3-3, Fig. 1, it would show all of them, would it not?

A. If the drawing would be correct, yes, it would.

Q. One more thing in connection with this patent: the mechanism for obtaining rocker movement of the undercut stops is the mechanism illustrated by the numbers 15, 16, 16 and 17, is that right?

A. That is right.

Q. And that mechanism rocks those stops?

A. It does.

Q. One for each revolution of the shaft 5?

A. That is right.

Q. And there is no time in which this rocking movement does not occur, is that right—as shown in the drawing?

A. As shown in the drawing, that is right.

Q. With a rocking movement occurring at each revolution with the type of stops shown and described by the Schletter patent, could you make a spliced fabric?

A. Not with any type of stop, no.

[fol. 465] Q. That is, you could not make a spliced fabric with any type of stop if you rocked it?

A. No.

Q. I wish you would turn your attention to the Kilburn patent, 19,370 of 1858. You read into the record from page 4 of the specifications the first sentence of the first full paragraph on the page, and expressed certain conclusions with respect thereto, and I ask you to read the next succeeding sentence beginning:

"If, on the other hand, the lower screw being at one end a right handed screw thread and on the other a left handed screw thread, the identical effect would be had at the opposite edges of the work equally in opposite directions by the turning of the one screw adjacent."

Can you state with that sentence in mind whether the structure of this patent was capable of widening at both sides of that fabric?

A. Not with that in mind. It would have to be excluded, because that is only a thought. It is not in the patent. That is why I did not cite it.

Q. You would not know from that disclosure how to do that, would you?

A. I did not say that, Mr. Darby.

Q. Would you know from the disclosure how to do it?

A. If I gave the necessary thought to it I think I would.

Q. My associate calls my attention to the fact that I omitted the next sentence which should have been included, which reads:

[fol. 466] "Narrowing the work may be affected by turning the screw in the reverse direction to that for widening."

The omission of that sentence does not alter your testimony at all, does it?

A. Not at all; no.

Q. Referring to the British Cotton patent, 208,362, I think one of the criticisms you advanced with respect to this patent is that it does not show opposed stops. By that you mean that the carrier rods, at least one or more carrier rods, does not have its distance of travel limited by the inside surfaces of the stop as distinguished from the outside surfaces.

A. That has nothing to do with it.

Q. Just what do you mean by opposed stops?

A. By opposed stops, whether limited by the inside of the stops or outside of the stops, I mean carrier rods which are provided with abutments working against these same carrier rods so you could make a design.

Q. By that you mean a carrier rod having an abutment working on the inside of the stops D^2 and D^3?

A. Not necessarily.

Q. They could work on the outside?

A. They could work on the outside.

Q. So it does not make any difference, so far as your definition of opposed stops is concerned whether they work on the inside or outside?

A. No, that would not make any difference. Perhaps I could make my meaning clear if I show you what are not opposed stops.

Q. You described that rather fully. So your definition of opposed stops has nothing to do with whether they abut [fol. 467] against the inside or outside of the surfaces of the stopped matter?

A. No, it would not make any difference.

Q. Now will you refer to the Claringburn patent 7068 of 1891 and state whether or not that patent shows opposed stops?

A. That patent shows opposed stops.

Q. Will you also look at the British patent to Lamb & Noon and tell me whether or not that patent shows opposed stops?

A. Most assuredly.

Q. May I ask you, Mr. Meyer, with reference to Plaintiff's Exhibit 53, which has reference to the two-needle closed split attachment sold by your company, were not the sales for the year 1935 available? I notice they are not included in here.

A. They would have been available. Sure they would. We only thought it would perhaps be better to have only a full year to make a better comparison. They can be furnished at any time.

Q. I want to get one thing very clearly established, and that is that you made no mistake in your answer to one question today: I understood you to say that 95 per cent of the split work sutures employed in the industry today is of the four-needle lap and not of the two-needle lap. Is that what you intended to say?

A. That is what I intended to say and is, I think, a fair estimate. Naturally I cannot give any positive figures unless I would assure myself that they were right.

Q. And what do you base that estimate on?

A. On my knowledge of knitting mills.

Q. And will you give me the names of the knitting mills [fol. 468] you have in mind in making that estimate that more employ four-needle lap and not two-needle lap?

A. The Berkshire; the Quaker——

Q. The Berkshire does not use a two-needle lap?

A. No. I beg you- pardon. I did not mean to say they do not use a two-needle lap at all, but not to any extent. They have isolated machines where they make two-needle lap, but——

Q. But by far——

A. But again 95 per cent of their production is four-needle lap.

Q. Who else?

A. Quaker; Apex; Joe Haines——

Q. Joe Haines?

A. Haines Hosiery Mills.

Q. H-a-y-n-e-s?

A. H-a-i-n-e-s. And Vickers, and I don't know just the names of those mills. If you give me a little time I will

make up a list for you very gladly, but I do not have these names on my finger tips.

Q. Artcraft?

A. Artcraft I am not acquainted with. I don't know what Artcraft is doing.

Q. Gotham?

A. I think to the greatest extent, yes.

Q. Kayser?

A. Kayser, yes.

Q. I guess that will be enough for my purpose.

A. Well, that is half of the industry.

Q. That is about half of the industry, is it?

A. Yes.

Q. You mean half of the industry as to quantity?

A. As far as quantity is concerned.

Q. There are some three hundred mills?

A. 360 some, but these are the big manufacturers.

I know who made the photographs of the defendant's machines which are in evidence in this case. He was a photographer by the name of Klein, and, if I recall right, [fol. 469] Mr. Ischinger was with him. The photographs were made for the plaintiff. I have made reference to the fact that some of the photographs show the material being knit. I can not tell from the photograph whether that is spliced or split work. It would make a difference in connection with whether it is spliced or split as to whether or not pins are used or not. If it was spliced work, there would be no necessity for using the pins, not in their capacity as provided for in that attachment.

Q. Could you give me the speed of operation of the modern knitting machine?

A. Around 70.

Q. That is around 70 R. P. M.?

A. Around 70 R. P. M.

Mr. Darby: That is all.

Redirect examination.

By Mr. Howson:

The Witness: The normal, usual speed of knitting machines in 1921 and 1925 was from 48 to 50.

I was asked about the absence of Mr. Schletter. I can state that he was certainly, requested to come here and

testify. His attitude was that he said he did not want to testify on account of his lifelong friendship with Mr. Louis Hirsch.

Mr. Howson: That is all.

Mr. Darby: I might make the statement for the record that the Southern District of New York is within subpœna jurisdiction of Philadelphia; at least Philadelphia is in the subpœna jurisdiction of the Southern District of New York.

Mr. Howson: That closes our case.

Sur-Rebuttal

[fol. 470] ALFRED E. ISCHINGER, recalled as a witness, having been previously sworn, testified in behalf of defendant as follows:

Direct examination.

By Mr. Darby:

Q. Mr. Ischinger, you have produced photographs for the plaintiff in this action of attachments that you obtained from the Brentmore Mills?

A. Yes, sir.

Q. You likewise testified in the case in New Jersey involving the Hofmann patent?

A. Yes, sir.

Q. You obtained the attachment which was left at the Brentmore Mills by Mr. Schletter when he left in 1922, did you not?

A. No, I did not obtain it.

Q. Were not you among the gentlemen that obtained it?

A. No, sir.

Q. Did you have charge of getting it and getting it to the courthouse?

A. No, sir.

Q. You are sure of that?

A. Yes, sir.

Q. Was it obtained under your direction?

A. No, sir.

Q. I will read your testimony to you from page 367, on direct examination in the Trenton case, as follows:

"As to what was done with the attachment which I saw at Brentmore, I will say that I requested that the attachment be obtained and that it be removed from the machine [fol. 471] at Brentmore and brought to the Textile Machine Works so that it could be incorporated in a model which would show how this device operated.

"The instructions I gave relative to the construction of that model were as follows: I instructed the man in charge of the work to complete the model in accordance with the Schletter patent in every detail, and supply all missing parts in accordance with our patent. He was instructed to use all of the parts that were obtained from Brentmore. That is the model which was on the ground floor of this building at the last session of the court.

"I show on the photograph, which is Plaintiff's Exhibit 33, what parts of that model were original parts obtained from Brentmore."

You then proceeded to describe the photograph of that machine contained on page 179 of the record in the Jersey case, Exhibit 32, and then you continued:

"Those parts I have named were parts on the Reading machine at Brentmore when I went there in 1931, and were removed therefrom and are now on the model. I checked over the model to see whether the mechanism which the erecting department at the Textile Machine Works supplied, corresponded to the mechanism shown in the patent in suit. [fol. 472] I found the mechanism to be the same throughout, except as to the ratchet operating mechanism for the pattern chain 70. That does not correspond with the construction shown in the patent.

"Where I gave instructions to make the model exactly like the patent in suit, where the mechanism had to be supplied by him he failed to make the connection to the pattern chain 70 as shown by the patent in suit. I did not discover that until it was too late to change it. I discovered it shortly before the model was to be sent to Trenton."

Did you so testify?

Mr. Howson: I object. Mr. Darby has called Mr. Ischinger as his own witness and I object to his examining him by referring to testimony in the previous case.

The Court: I do not see how you can call him for your own witness in surrebuttal and then impeach his own statement. You produced him as your witness. He says certain things. Now you ask him a question in which you are trying to put something into the record which is not sur-rebuttal. Objection sustained.

Mr. Darby: May I note an exception.

Q. Does the testimony I have read refresh your recollection as to the first question I asked when you went on the stand, namely, whether you supervised the obtaining of that machine?

[fol. 473] Mr. Howson: I object, as that is not sur-rebuttal and is a direct effort to impeach his own witness.

Mr. Darby: I am refreshing the witness's recollection and giving him an opportunity to correct it if it is refreshed.

The Court: Objection sustained.

Mr. Darby: May I note an exception.

Q. Are you familiar with the structure employing the only parts of the Schletter attachment which was produced as a model in the court in Trenton?

Mr. Howson: I object to that as not sur-rebuttal. We certainly did not take any evidence with reference to a model produced in court at Trenton. Mr. Darby tried to cross-examine some of the witnesses about it.

Mr. Darby: And the Court sustained your objection because it was not within the scope at that particular time. Subsequent to that time, however, one witness has testified that he understood that this attachment which you have now put in the form of another experimental machine, was the model——

The Court: How is that sur-rebuttal? How is his testimony in sur-rebuttal of anything that has been produced by the plaintiff here in rebuttal? It does not make any difference in this case whether there was an exhibit in that case or not. We have a collateral issue here that does not [fol. 474] affect the issue that is before this Court. I do not care what they produced there and they have not produced it here in their examination in chief. Now you want to ask about something they have not produced and get into the record something they have not offered in evidence or have not offered any evidence about. If there is anything in that

exhibit that this Court ought to have knowledge of, it has to be produced in some other manner.

Mr. Darby: May I outline the facts: it is something that they did produce down there and have not produced here. That is perfectly true, but——

The Court: Suppose they did not produce it. Then you have not any right to rebut evidence about it.

Mr. Darby: But they have produced new evidence bearing upon operability of this particular type of mechanism.

The Court: Yes. They produced evidence here that the particular thing that one witness says the patent does not cover, and another witness says it does, or implies it at least, does work and this and that can be done. You may rebut that, but that is not what you are doing.

Mr. Darby: Very well. I will go to my next point. May I preserve my record——

The Court: Yes. You may have an exception. I do not mean to say that you cannot produce and rebut by a proper [fol. 475] method any evidence that discloses a change of theory or change of condition or change of testimony over what was taken in the other case, but——

Mr. Darby: That is exactly what I was endeavoring to do.

The Court: I do not want to say you were not following the rules of evidence, as you know them probably as well as I do, but it does not seem to me that is proper sur-rebuttal evidence in view of the condition of this record.

Mr. Darby: Very well, I will go to the next point.

Q. Calling your attention to Plaintiff's Exhibit 15, and the parts A, B, G and C as shown there and the explanation of their operation, was that explanation originated by you during the trial in Trenton?

Mr. Howson: I object to that as not sur-rebuttal.

The Court: I think he may answer that.

A. Well, may I ask just what you mean by originating that explanation?

Q. I mean just exactly what you meant when you testified in the New Jersey case, and I call your attention to the testimony X Q. 28 to X Q. 35, in which you said it was originated by you from which you can get the proper meaning of the term (handing record to witness).

A. I note from these questions and answers that I had made the statement that the explanation was originated by [fol. 476] me, but I would like to add that what undoubtedly I meant at that time was that I was called upon to read the drawing, Fig. 1, of the patent, and to explain just what that mechanism was, and I offered the explanation that I did at that time.

Q. And it is likewise a fact, is it not, that the explanation was originated by you just before one of the adjournments during the trial?

Mr. Howson: I object to that if the Court please.

The Court: Objection sustained.

Mr. Darby: May I note an exception, please. That is all.

Cross-examination.

By Mr. Howson:

Q. Mr. Ischinger, what is your profession and what has been your training?

A. Well, how far back do you want me to go on that?

Q. Not too far. Are you a draftsman, a skilled draftsman?

A. Yes.

Q. And you are the resident patent attorney of the plaintiff company?

A. That is right.

Q. Will you state whether or not you made or caused to be made this perspective drawing to illustrate what is shown in the drawings of the patent in suit?

A. Yes, I had such a drawing made.

Q. Mr. Ischinger, in making that drawing did you make it entirely and exclusively from a reading of the drawings of the patent in suit?

A. Yes, sir.

Mr. Darby: I think that is going outside of the direct examination, if the Court please.

[fol. 477] Mr. Howson: I thought you asked whether he originated the drawing and why.

Mr. Darby: Originated the explanation of the operation. That is all he testified to.

Mr. Howson: If the Court please, I don't know exactly what Mr. Darby had in mind in asking any such question. Certainly I am entitled to ask the witness the circumstances

under which he originated it and how and why, and in what manner.

Mr. Darby: I had a lot in mind which was not allowed to go in the record.

The Court: I think his answer may stand to this question.

Q. And, in your opinion as a draftsman, will you state whether the attachment as shown in the perspective drawing, Plaintiff's Exhibit 15, is the things shown by the drawings of the patent in suit?

Mr. Darby: I object.

The Court: I don't think it is cross examination of this witness. The objection will be sustained.

Q. When reference was made in your examination to originating the drawing, or explanation as shown in the drawing, Plaintiff's Exhibit 15, will you state whether or not you put into that drawing anything other than that which you found in the drawings of the patent in suit?

[fol. 478] A. Well, the explanation was based entirely upon the elements that were found in Fig. 1, for example, of the patent drawings, and it was not a question of originating anything. It was merely a question of explaining what is shown in that figure.

Q. And it represents what this figure means to a skilled draftsman, is that it?

A. What it would be to any draftsman.

Mr. Darby: I object to that.

Mr. Howson: He is your witness.

The Court: Objection sustained.

Mr. Howson: That is all.

Trial Resumed

J. Lester Lincoln, called as a witness on behalf of the defendant in sur-rebuttal, being first duly sworn, testified as follows:

Direct examination.

By Mr. Darby:

The Witness: I reside at Womelsdorf, Pennsylvania. I am Superintendent of Nolte & Horst. I have been connected

with the hosiery industry since 1917. I am familiar with the operations of Nolte & Horst Mills in producing full-fashioned hosiery. I am familiar with the equipment that is employed.

We employ exclusively the drum type of attachment in producing cradle feet.

[fol. 479] Q. How many drum type attachments do you use?

Mr. Howson: I object to this, if the Court please, on the ground that it is not sur-rebuttal.

The Court: He may answer this particular question and we will see how far this testimony goes.

Mr. Darby: I am prepared to argue with my friend on the propriety of this line.

The Witness: We use in both plants 332. We use this drum type attachment exclusively for cradle-feet and French heels and we could make other types if we were asked to—other things. We have never used a spindle type. We never used it, although we bought two. We never used it.

Q. What reason did you have for the use of the drum type in preference to the spindle type?

Mr. Howson: I object to that, if the Court please, again on the ground that it is not sur-rebuttal. To make that clear, your Honor will recall that the defendant as its defense, went into the prior art and included in the prior art patents drum type of devices. Then was the time to offer all the evidence they had to offer on this drum type device as affecting the validity of the patent in suit. Now in rebuttal, of course, we called our expert to consider the drum [fol. 480] type device in relation to the patent in direct answer to what the defendant had said. But now it is proposed to open the whole case by this witness under the guise of sur-rebuttal to bolster up its defense on the drum type of device.

Mr. Darby: Your Honor, I believe this is absolutely proper sur-rebuttal. We already put in evidence on the drum type of attachments. The plaintiff in their rebuttal case put evidence in, through their expert Meyer, that the drum type had become obsolete and had been completely supplanted by the spindle type. I think this testimony is clearly admissible as sur-rebuttal on that question.

The Court: I am doubtful, but I will let him answer subject to the objection.

The Witness: At that time we—that was about 1929, I think—bought two spindle type and after much discussion we came to the conclusion that the drum type was more flexible.

Mr. Howson: I move to strike out the answer on the same grounds as heretofore urged. In sur-rebuttal, at this stage of the case, they are going into the relative merits of the spindle device and the drum device which was offered in evidence as a defense by the defendant in the main case. I know your Honor has ruled on this and I am just making this objection so as to preserve our rights with the understanding that if your Honor wishes that it stand subject to the——

[fol. 481] The Court: It may stand subject to the motion.

Q. Will you explain what you mean by your last answer "more flexible"?

Mr. Howson: The same objection, if the Court please.

The Court: The same ruling.

A. At that time we were making double heels and things of that type, and the paramount advantage I would say in the drum type you are not limited to a 2 or a 4-needle step. It is more flexible. You can do more with it in that respect.

Mr. Darby: That is all.

Mr. Howson: No questions.

(Witness excused.)

Ray F. Borda, called as a witness on behalf of the defendant in sur-rebuttal, being first duly sworn, testified as follows:

Direct examination.

By Mr. Darby:

The Witness: I reside at 1801 Hammond Boulevard, Reading, Pennsylvania. I am general manager of the Rosedale Knitting Company. I am familiar with the equipment employed by the Rosedale Knitting Company, in the manu-

facture of its hosiery. We have 558 knitting machines. The [fol. 482] daily production is between five and six thousand dozen per day.

Q. Don't answer this question until Mr. Howson makes an objection, if he wants to offer one: what type of suture do you employ in the stockings of your manufacture?

Mr. Howson: I object to that, if the Court please, as not sur-rebuttal. It attempts to go again, I presume, into this supposed difference between two and four-needle splits that have been fully discussed on both sides and it is simply reopening the case.

The Court: He may answer subject to the objection.

A. Two needle. We use that exclusively. We have used that exclusively since 1930.

Mr. Darby: That is all.

Cross-examination.

By Mr. Howson:

The Witness: I don't know whether the Rosedale Knitting Company, Inc., is the same company that has agreed to make a settlement with the plaintiff and accept a license under the Schletter patent. There is only one Rosedale Knitting Mills at Reading, Pennsylvania.

Mr. Howson: That is all.

(Witness excused.)

[fol. 483] ALFRED M. HAHN, called as a witness on behalf of the defendant in sur-rebuttal, being first duly sworn, testified as follows:

Direct examination.

By Mr. Darby:

The Witness: I reside in Philadelphia, Pennsylvania. I am assistant superintendent in charge of hosiery production for Julius Kayser Company. I have been connected with the hosiery industry about thirty years. I am familiar with the machinery employed by Kayser in the production of its stockings. The total number of machines employed

by the Kayser Company is about three hundred in this country. They are divided between leggers and footers, in a ratio of about three to one. That is the usual arrangement of the knitting mill. That is, there are three leggers for every one footer. The footers are equipped with the attachment used for making cradle soles. We employ both spindle type and drum type. We employ more stud wheel type attachments or drum type attachments than spindle. These drum type attachments have been equipped comparatively recently; namely since about 1931. They are used continuously in production.

We have 67 footers in operation. It is part of my duties to see that the machinery is kept in operation. We use the drum type on a 42, 45 and 51 gauge machine. We have attachments on 20, 24 and 28 sections machines—footers.

There is no difference between cost of operation and the cost of maintenance in operation by repairs and adjust-
[fol. 484] ments and what not, with the drum type over the spindle type.

Mr. Darby: That is all.

Cross-examination.

By Mr. Howson:

The Witness: We used this drum type on the footer machines, and only in making cradle foot. They were, of course, installed before I was connected with the company, but I do know they came from a certain source. Some of the machines in the mill were knitting machines furnished by Louis Hirsch.

Q. And of those machines are there any footers?
A. Yes.
Q. What type attachments are on those?
A. They have the spindle type.

Mr. Howson: That is all.

(Witness excused.)

ALFRED FRIEDMAN, recalled as a witness on behalf of defendant in sur-rebuttal, testified as follows:

Mr. Darby: I offer in evidence the photograph which has been previously marked Defendant's Exhibit G-2 for iden-

tification, which appears on page 179 of Volume 2 of the record in the Hofmann suit, as a photograph of the model.

(Defendant's Exhibit G-2 for identification received in evidence.)

[fol. 485] Q. Will you please refer to the Defendant's Exhibit G-2 in evidence and refer to the perspective drawing, Plaintiff's Exhibit 15 for identification, and briefly but exactly point out the difference in the mechanism on that machine for effecting rotation of the cam 70 from that as illustrated on the defendant's exhibit?

Mr. Howson: I object to that, if the Court please, as not proper sur-rebuttal. The testimony with reference to this attachment of the patent in suit started when plaintiff opened its case, and in defense, if the Court will remember, Mr. Darby's witness stated that he could not understand the drawing of the patent. He was cross-examined and explained whether or not he thought this was in accordance with the drawing and then in rebuttal we called witnesses to reply to that. Now we propose to have the whole subject reopened and gone into afresh under the guise of sur-rebuttal. I do not see how it possibly can be relevant.

Mr. Darby: If the Court please, in the plaintiff's rebuttal case they put in evidence a machine, or at least photographs of a machine with the identical mechanism for effecting the rotation of the chain 70 as it is shown in this drawing, or they are substantially identical. Then, and for the first time, it developed that the mechanism that they acquired, other than that particular mechanism, was mechanism which purports to be the original parts *of* [fol. 486] the inventor made in 1921 and left at the Brentmore Mill, and were taken from the model which was in evidence as an exhibit in Trenton. Your Honor will recall the cross examination of the mechanics in connection with it where the photograph which has just been put in evidence, the photograph of the model down in Trenton, was identified. It appears for the first time that the mechanism for rotating the chain 70 is different, and while a comparison of the photograph and this drawing will enable one skilled in machinery to tell the difference between them, for the sake of the record I want to have one skilled in machinery merely recite those differences, both for convenience

and also to make sure that the differences are completely chronicled. I submit that certainly is proper sur-rebuttal.

Mr. Howson: I would like to reply briefly to that, if the Court please. This model or picture was not brought into the case by the plaintiff. No evidence was taken by the plaintiff having anything to do with this model. What happened was that during the plaintiff's rebuttal case my friend first through one witness and then through another tried to lug that in which had not been brought into the case by us at all. Now he himself having brought it in in our case proposes to use that as a basis of sur-rebuttal of our testimony.

I wish to add the further objection therefore that this is [fol. 487] utterly irrelevant and improper on the ground that there is no evidence in the case which identifies that model or establishes that it is the original model at Brentmore or is the model that was used at all in making the device of the attachment in suit.

Mr. Darby: There we have a sharp issue of fact, because the testimony certainly was, as I recall it, that the parts used in making this machine, which the plaintiff put in the first time and was testified to by plaintiff's own witnesses in rebuttal, as having been taken from this model and constituting the original parts, insofar as they were available, produced in 1921. That was plaintiff's own testimony given the first time in rebuttal, and I think that Mr. Howson has forgotten the testimony to that effect.

Mr. Howson: No. I am very well familiar with that testimony.

The Court: Is Plaintiff's Exhibit 54 the same as G-2?

Mr. Darby: No, sir.

The Court: What is this machine?

Mr. Darby: That machine consists of a regular knitting machine to which has been applied, according to plaintiff's testimony in rebuttal, parts taken from this (indicating Exhibit G-2). The difference between them is the mechanism for actuating cam 70. I think in sur-rebuttal, and I earnestly urge, that I am entitled to have the witness point out the difference between the mechanisms for actuating [fol. 488] chain 70. That is all I am asking the witness about at this stage.

The Court: He may answer, subject to the objection.

The Witness: In the photograph of the Trenton model, the chain 70 is racked by a cam on the main cam shaft 5 and transmits its power through a rearwardly extending lever fulcrummed on a bracket on the back beam of the machine, the short arm of this lever appearing to go under a pawl lever to which pawl 71 is attached. The cam, the roller, the cam lever as well as the pawl lever appear to be unmarked in the photograph.

In the perspective drawing the mechanism for actuating chain 70 consists of a lever B which is fulcrummed in the bracket *a* attached to the projection on the member 41, the long arm of B extends rearwardly and passes in a bent form over the back beam of the machine and comes to rest under the pawl lever D to which is attached the pawl 71.

Q. Have you furnished a mechanism for drum attachments in addition to your spindle type attachments?

Mr. Howson: I object, your Honor. That is not surrebuttal.

Mr. Darby: I submit it is.

The Court: Oh, he may answer.

A. Yes, we did.

Q. How recently?

A. Well, between the years 1929 to 1932, I would say.

[fol. 489] I am asked to examine these stockings handed me and state if there are commercial type sutures employed in stockings and what they are, whether they are two needle or four needle. I will state that this stocking here with the R. H. Macy Company price tag on, has a cradle foot with a two-needle lap in the straight portion, and a four-needle lap in the diagonal portion of the suture.

The Court: What do you mean by the "straight portion"?

The Witness: This straight portion of this cradle (indicating).

The Court: What do you mean by the diagonal?

The Witness: This is the diagonal (indicating).

Mr. Darby: Diagonal to the wales.

The Court: You mean this is two-needle (indicating)?

The Witness: Yes, sir.

The Court: And this is the four-needle?

The Witness: Yes, sir.

By Mr. Darby:

Q. Before you take up that other stocking, just one other question: In operating on a machine when you change from a four-needle lap to a two-needle lap, is there some special operation involved?

A. In order to make that stocking it is necessary to use two sets of abutments and two sets of carrier rod stops, one for the diagonal portion and one for the straight portion. [fol. 490] When you come to make the toe, it is necessary to take out two step stops instead of one if the spindle type like the defendant's structure was used in order to use the split carrier in the toe, which is usually done. I am referring to the type of stops.

Mr. Darby: All right, I will offer that stocking in evidence.

(Marked Defendant's Exhibit H-2.)

The Witness: This stocking marked "Style No. 11,605; Color, Putty Beige No. 2" has a cradle foot made with a four-needle lap both in the straight and in the diagonal portion of the cradle foot.

Mr. Darby: I offer that stocking in evidence.

(Marked Defendant's Exhibit I-2.)

The Witness: I am now handed these three samples which we have fastened together, being stockings of the Berkshire Mills; I will explain those.

This stocking marked "Style 573" has a two-needle lap in the straight portion of the cradle foot and a four-needle lap in the diagonal portions of the cradle foot.

The Court: The same as Exhibit H-2?

Mr. Darby: Yes, sir.

The Witness: I have here a stocking of the Berkshire Knitting Mills marked "Style No. 1007." The cradle foot [fol. 491] shows that the straight portion thereof is made with a two-needle lap and the diagonal portions thereof with a four-needle lap. That is the same as the other.

Mr. Darby: I think they are all the same, if I am not mistaken.

The Witness: The third sample from the Berkshire Knitting Mills is marked "Style No. 1069," and also has the two-

needle lap in the straight portion of the cradle foot and a four-needle lap in the diagonal portion.

Mr. Darby: I offer all three of those as one exhibit, because they are all the same except as to style numbers.

(Marked Defendant's Exhibit J-2.)

The Witness: This is a stocking that I obtained from the Rosedale Knitting Mills and shows a split cradle foot in which the straight portion as well as the diagonal portions of the cradle foot are made with the two-needle lap.

Mr. Darby: I offer that stocking in evidence.

(Marked Defendant's Exhibit K-2.)

Mr. Darby: Now, your Honor, this, quite frankly, is not sur-rebuttal. We did not have the photographs taken at the time because they were unavailable and I merely want to offer in evidence photographs of the equipment that was demonstrated to the Court. They are taken in different [fol. 492] views, perspective, front view, rear view and detailed views. We did not have the photographs available at the time of the demonstration, and that completes my case.

Mr. Howson: I don't know whether the photographs should be offered at this very last minute without giving us an opportunity of having our expert look into them and without having them explained.

The Court: They may be received, and you may take all the time you need to inspect them.

(Marked Defendant's Exhibit L-2.)

Cross-examination.

By Mr. Howson:

The Witness: Referring to the drawings of the model concerning which I testified, the difference that I have pointed out is with respect to the lever connection by which the chain 70 is pawled from the cam 35a. This connection which is shown in the model is, I would say, a practical working conception. If you did not have there this connection shown in Plaintiff's Exhibit 15, or this connection shown in the model, I would say, as a mechanic, you might have difficulty in furnishing a connection for operating that

chain 70 from the cam 35a. The reason is that I would have to consider the problem that would be involved and what the parts were already on the machine which I would have to pass. As to these connections which I see, the one in the model, that is a perfectly workable model. That is in a model which shows no other mechanism than that.

[fol. 493] I have identified or referred to certain stockings here that are marked Defendant's Exhibit J-2, and I spoke of these as manufactured by the Berkshire Knitting Mills. I got that information from the tags on the stockings. I do not know when they were made. I do not know anything else about them except that they are tagged "Berkshire Knitting Mills," and they were handed to me as having been made by the Berkshire. I have no knowledge whatever as to when they were made or what the relation is between these particular samples and the numerous other stockings that are manufactured by the Berkshire Knitting Mills.

Mr. Howson: That is all.

Mr. Howson: Now, if the Court please, during sur-rebuttal, the defendant offered in evidence a photograph of the machine that was demonstrated here during the trial and which is marked Defendant's Exhibit L-2. I just wish to make this note, that no evidence was offered on behalf of the defendant connecting any of these devices with the patents as shown, and on that ground I decided that it is unnecessary to take any sur-sur-rebuttal directed to these pictures, and we have no further testimony.

Mr. Darby: I would like to have an understanding with you, that at the argument either side may refer to the rules in the Patent Office.

Mr. Darby: That is perfectly agreeable.

[fol. 494] Mr. Howson: That is the regular official book, if there is anything relevant there.

Mr. Howson: There is only one other formal matter. There was reference made by Mr. Meyer to Sowter patent 18,461 of 1888, and I neglected to offer it, and I would like to make a formal offer of that exhibit.

Mr. Darby: No objection.

The Court: It may be received.

(Marked Plaintiff's Exhibit 57.)

Mr. Howson: I think that is all.

IN UNITED STATES DISTRICT COURT

STIPULATION AND ORDER APPROVING NARRATIVE STATEMENT OF THE EVIDENCE

The foregoing narrative statement of the testimony, taken at the trial, having been presented to me, the same is hereby approved and allowed, and is ordered filed as a statement of the evidence to be included in the record on appeal, as provided by Equity Rule 75.

Dated, August —, 1936.

Walter C. Lindley, U. S. District Judge.

Consented to: Howson & Howson, Attorneys for Plaintiff. Darby & Darby, Attorneys for Defendant.

CLERK'S COPY.

Vol. II

TRANSCRIPT OF RECORD

Supreme Court of the United States

OCTOBER TERM, 1937

No. 62

TEXTILE MACHINE WORKS, PETITIONER,

vs.

LOUIS HIRSCH TEXTILE MACHINES, INC.

ON WRIT OF CERTIORARI TO THE UNITED STATES CIRCUIT COURT OF APPEALS FOR THE SECOND CIRCUIT

PETITION FOR CERTIORARI FILED MAY 14, 1937.

CERTIORARI GRANTED JUNE 1, 1937.

SUPREME COURT OF THE UNITED STATES

OCTOBER TERM, 1937

No. 62

TEXTILE MACHINE WORKS, PETITIONER,

vs.

LOUIS HIRSCH TEXTILE MACHINES, INC.

ON WRIT OF CERTIORARI TO THE UNITED STATES CIRCUIT COURT OF APPEALS FOR THE SECOND CIRCUIT

VOL. II

INDEX.

	Original	Print
Record from D. C. U. S., Southern New York—Continued.		
Narrative statement of evidence—Continued.		
Plaintiff's Exhibits:		
1—Schletter patent in suit, No. 1,713,628.....	495	343
2—Set of photographs attached to stipulation.	505	354
10—Drawing showing carrier motion.....	516	365
15—Large drawing in perspective of Schletter attachment	517	366
16—Large drawing of Figure 10 of patent showing how it is done.....	518	367
18—Large drawing showing insert in center of stocking	519	368
20—Large drawing showing work called "Shadow Clock" like Patent 1,531,349.....	520	369
24—Large drawing showing window clock design	521	370
25—Large drawing of selvage reinforcement...	522	371
28—Large drawing of cradle foot.....	523	372
32—"Reading" record of 1930.....	524	373

JUDD & DETWEILER (INC.), PRINTERS, WASHINGTON, D. C., AUGUST 24, 1937.

	Original	Print
Record from D. C. U. S., Southern New York—Continued.		
Narrative statement of evidence—Continued.		
Plaintiff's Exhibits—Continued:		
33—Large perspective drawing showing commercial form of plaintiff's attachment..	532	381
34—Large drawing of Defendant's attachment.	533	382
35—Large drawing of Hofmann attachment....	534	383
36—List of attachments sold by Textile (Kroner testimony)	535	385
37—Grosser license	538	387
39—Schletter patent, No. 1,531,349.....	545	393
48—Drawing produced by Myers on rebuttal to show limitations of Oesterreich patent...	552	401
49—Drawing produced by Myers on rebuttal to show limitations of Oesterreich patent..	553	402
50—Drawing produced by Myers on rebuttal to show limitations of Oesterreich patent...	554	403
52—Design of spliced Pointex heel.....	555	404
53—List of sales of Bitzer attachment.....	557	405
54—Photographs of Plaintiff's experimental machine showing Schletter's attachment....	558	407
56—Cecka patent, No. 1,213,333.....	560	412
57—Sowter British patent, No. 18,461 of 1888..	571	420
Defendant's Exhibits:		
"B"—Advertisement of Textile of an attachment	577	426
"C"—Advertisement of Textile of an attachment published in Textile World.....	580	429
"D"—Page 186-1 from Parts Catalog.....	581	430
"E"—Bitzer patent, No. 1,938,207.....	582	431
"F"—Schletter patent, No. 1,752,206.....	592	441
"H"—Drawing No. 1 prior art spindles and carrier (Miller)	600	450
"I"—Four photographs of Seyfert & Donner Lamb type of machine.....	601	451
"L"—Marked copy of patent in suit showing changes	605	455
"M"—Drawings of Hirsch's structure.....	615	465
"N"—U. S. prior art patents.....	618	468
Cecka, No. 1,180,568	619	469
Cecka, No. 1,217,411.....	624	474a
Chipman, No. 1,163,970.....	627	475
Gee, No. 1,014,753.....	653	502
Kilbourn, No. 19,370.....	656	506
Landenberger, No. 1,134,749.....	665	516
Lieberknecht, No. 981,663.....	679	531
Muller, No. 1,564,438.....	689	542
Oesterreich, No. 1,644,688.....	694	548
Rowlett, No. 500,953.....	708	558
Sowter, No. 478,527.....	724	580
Schletter, No. 1,198,482.....	728	585
Zwicky, No. 1,608,285.....	737	595

	Original	Print
Record from D. C. U. S., Southern New York—Continued.		
Narrative statement of evidence—Continued.		
Defendant's Exhibits—Continued:		
"Q"—Mather British patent, No. 7476 of 1837	743	603
"R"—Depass British patent, No. 10,405 of 1884	763	623
"S"—Roe British patent, No. 1991 of 1869	771	631
"T"—Willatt et al. British patent, No. 573 of 1871	784	644
"U"—Laue & Timaeus German patent, No. 21,332	794	654
Translation	796	657
"V"—Black British patent, No. 13,905 of 1887	804	664
"W"—Woodward & Shaw British patent, No. 19,627 of 1891	811	671
"X"—Lamb & Noon British patent, No. 15,129 of 1889	815	675
"Y"—Claringburn British patent, No. 4,967 of 1890	824	684
"Z"—Colored prints of Lamb & Noon patent	833	693
"A-1"—Claringburn British patent, No. 7068 of 1891	835	695
"B-1"—Lieberknecht German patent, No. 117,153	839	699
Translation	841	701
"C-1"—Cotton British patent, No. 208,362 of 1923	845	704
"D-1"—Chamberlain article "Knitting Mathematics and Mechanisms"	849	708
"E-1"—Spindles of prior art—Sheet 1	853	712
"F-1"—Spindles and carriers—Sheet 2	854	713
"H-1"—Drawings of herringbone suture—Figs. 1 to 9	855	714
"J-1"—Drawing of herringbone split—C-1 and C-1A	864	723
"M-1"—4 needle lap drawing	865	724
"O-1"—2 needle lap drawing	866	725
"C-2"—Rosedale order—German photostat and translation	867	727
"D-2"—Rosedale invoice of March 12, 1928	868	729
"F-2"—Drawing introduced by Weinberg	869	730
"L-2"—Photographs of defendant's demonstration machine set up for trial	870	731
Opinion, Lindley, D. J.	877	737
Findings of fact and conclusions of law	902	754
Petition for rehearing	906	756
Answer to petition for rehearing	910	759
Order denying petition for rehearing	914	761
Interlocutory decree	915	762
Petition for appeal	917	763
Allowance of appeal	918	764
Assignment of errors	919	764
Citation (omitted in printing)	921	

	Original	Print
Record from D. C. U. S., Southern New York—Continued.		
Stipulation as to contents of record	922	766
Stipulation as to correctness of record	925	767
Clerk's certificate (omitted in printing)	926	
Proceedings in U. S. C. C. A., Second Circuit	927	769
Opinion, Hand, J.	927	769
Judgment	930	774
Petition for rehearing (omitted in printing)	932-941	
Orders denying petition for rehearing	942	775
Clerk's certificate	945	776
Order allowing certiorari	946	777
Stipulation and addition to record	947	777
Excerpts from Plaintiff's Exhibit 3—Record in Hoffman suit	949	778
Testimony of Elmer R. Roth	949	778
Paul Guenther	959	785
Frank Heyde	961	787
Frank Nobis	965	790
Max Gruner	966	791
Arthur W. Mutchler	970-a	795
Testimony of Percy Hockin	975	799
Adolph Hecker	976	800
Jacob Boch	978	801
Fred Drawert	994	814
Ferdinand Nusbaum	996	815
Defendant's Exhibits:		
"Q-1"—Photographs of attachment applied to knitting machine	1002	821
"V-1"—Photographs of attachment in use for full-fashioned knitting machine	1007	826
"Y-1"—Photographs of Nussbaum machines	1011	830
"T-1"—Perspective drawing of attachment	1020	839
"B-2"—Drawing of Nussbaum machine	1021	840
Clerk's certificate (omitted in printing)	1022	

May 21, 1929. R. E. SCHLETTER 1,713,628

ATTACHMENT FOR FLAT KNITTING MACHINES

Filed Nov. 5, 1925 4 Sheets-Sheet 1

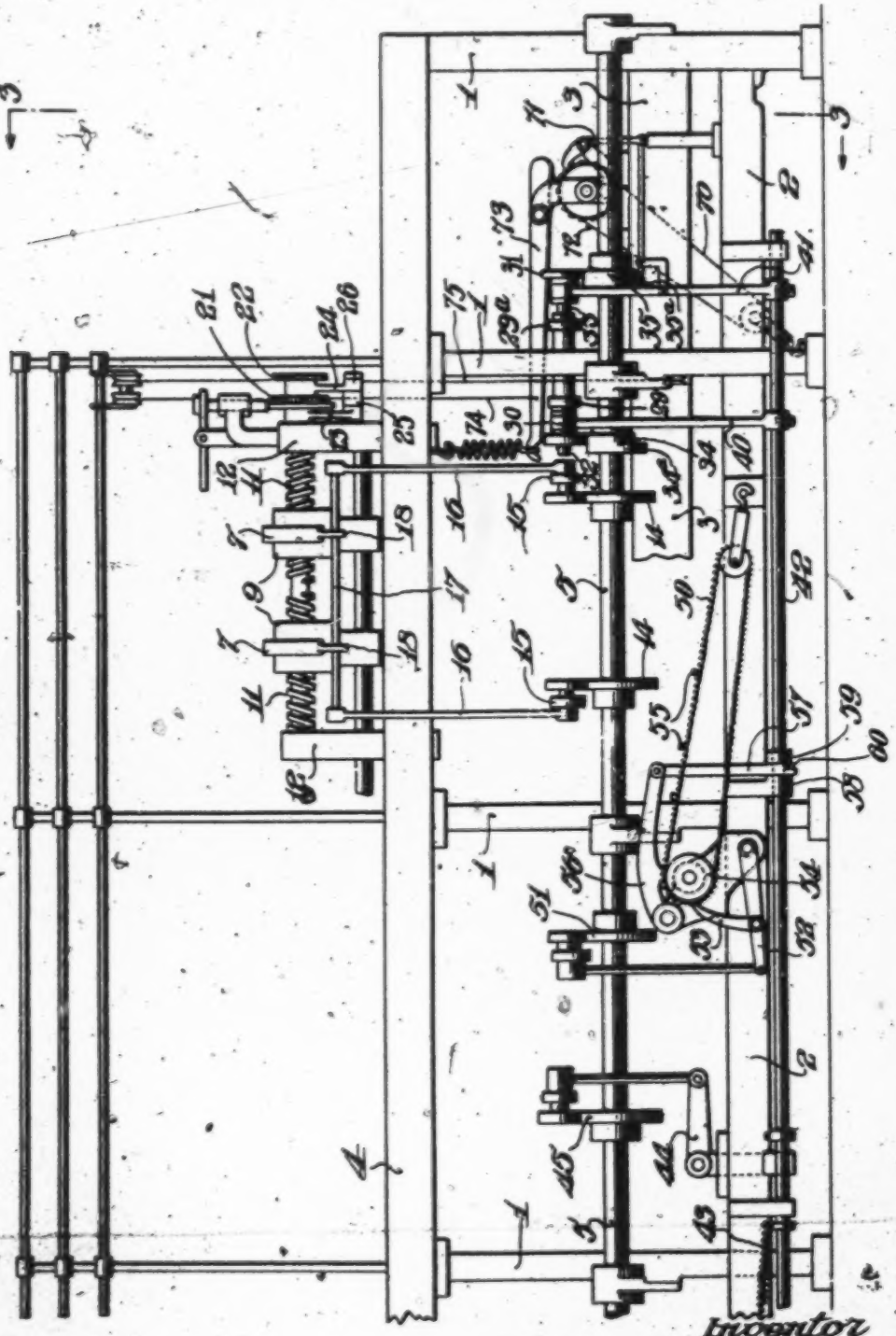

Fig. 1.

Inventor
Richard E. Schletter,
By

345

May 21, 1929. R. E. SCHLETTER 1,713,628

ATTACHMENT FOR FLAT KNITTING MACHINES

Filed Nov. 5, 1925 4 Sheets-Sheet 2

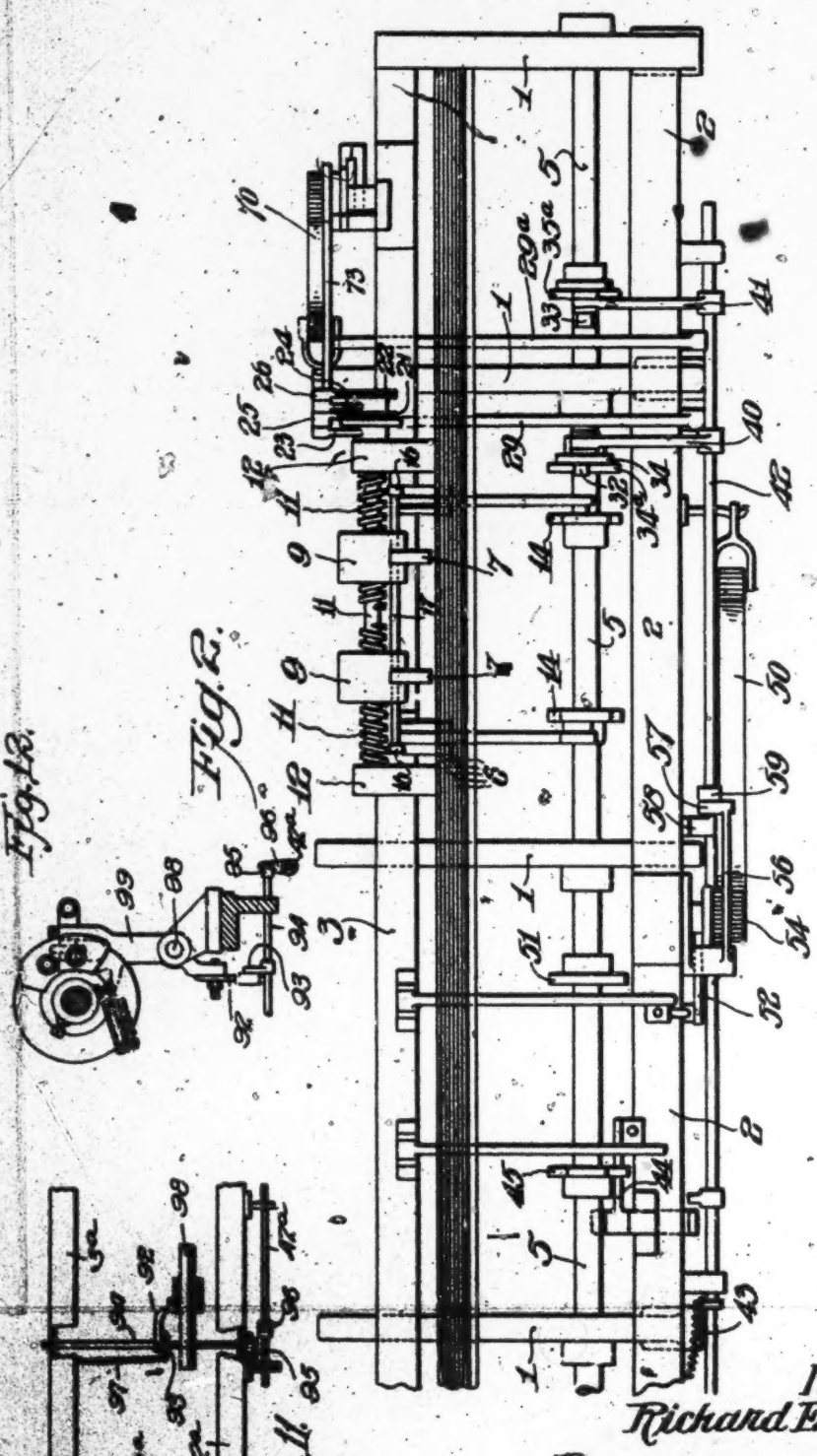

Fig. 2.

Fig. 12.

Inventor
Richard E. Schletter,

346

May 21, 1929. R. E. SCHLETTER 1,713,628

ATTACHMENT FOR FLAT KNITTING MACHINES

Filed Nov. 5, 1925 4 Sheets-Sheet 3

Fig. 4.

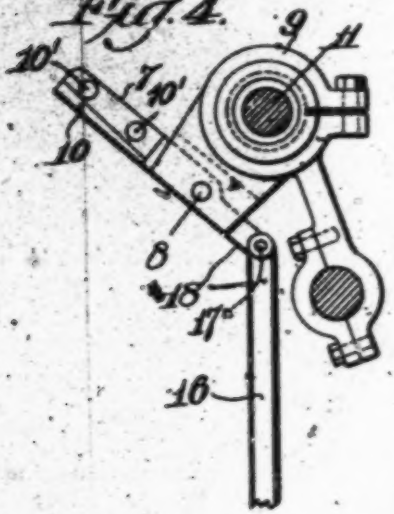

Fig. 3.

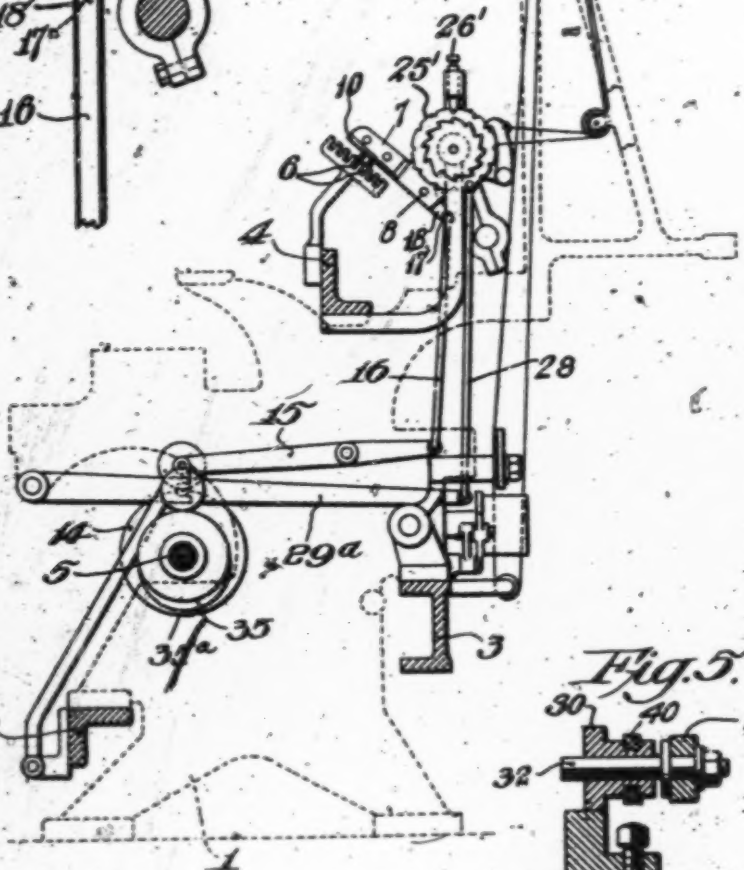

Fig. 5.

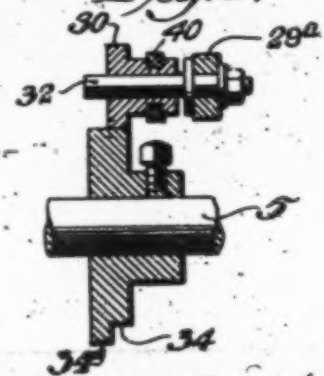

Inventor
Richard E. Schletter,
By
William Clacton

347

May 21, 1929. R. E. SCHLETTER 1,713,628

ATTACHMENT FOR FLAT KNITTING MACHINES

Filed Nov. 5, 1925 4 Sheets-Sheet 4

Fig. 6.

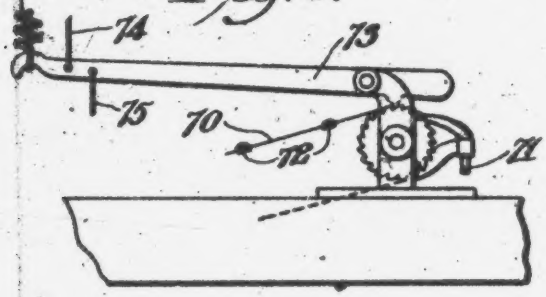

Fig. 7.

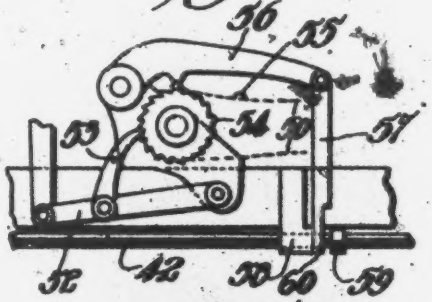

Fig. 10.

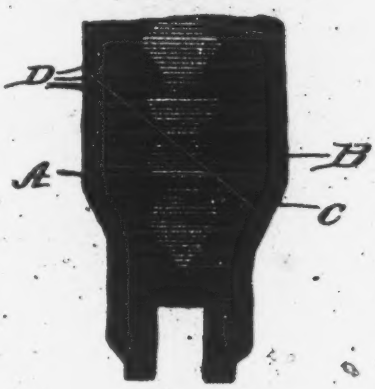

Fig. 8.

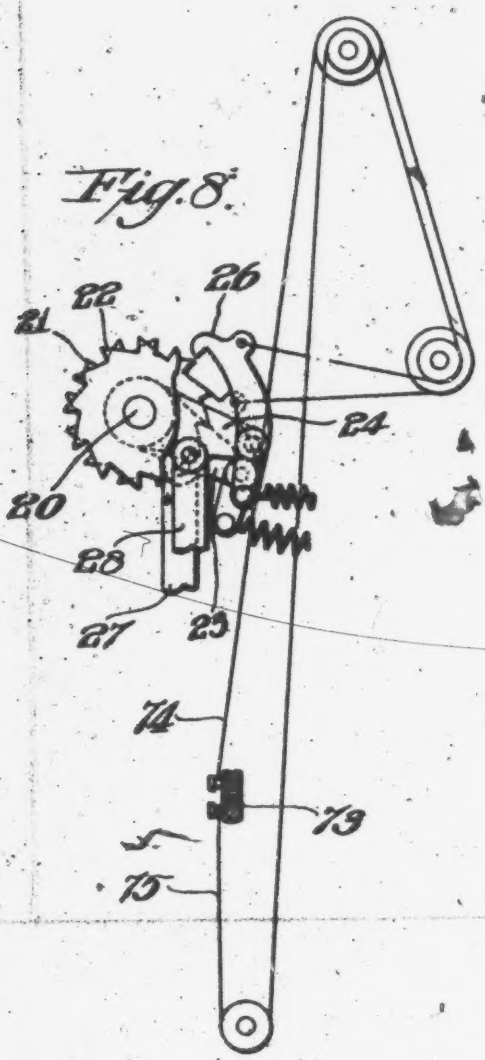

Fig. 9.

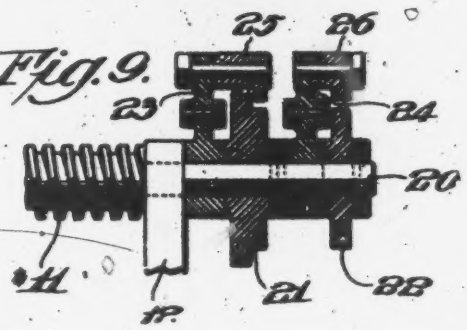

Inventor
Richard E. Schletter,
By
William J. Jackson
Attorney.

Patented May 21, 1929. 1,713,628

UNITED STATES PATENT OFFICE.

RICHARD R. SCHLETTER, OF PHILADELPHIA, PENNSYLVANIA, ASSIGNOR, BY MESNE ASSIGNMENTS, TO SCHLETTER & LANDER, INC., OF PHILADELPHIA, PENNSYLVANIA, A CORPORATION OF DELAWARE.

ATTACHMENT FOR FLAT-KNITTING MACHINES.

Substitute for abandoned application Serial No. 569,559, filed June 19, 1922. This application filed November 5, 1925. Serial No. 66,916.

This invention, generally stated, has relation to flat knitting machines for making hosiery of full fashioned type and has more particular relation to an attachment for fashioning designs, as clocks, upon said hosiery. This application is a substitute for my abandoned application No. 569,559 filed June 19, 1922.

Commercially considered, two types of clocked hosiery are in use. In one type clocks are of open work, termed clocklace, and stockings of this type, being relatively fragile, are not suited for all occasions or every-day use and furthermore are comparatively expensive. The other type comprises hosiery in which clocks are embroidered thereon. While this type is best suited for every-day use, practice dictates, that, the action of needles laying-on the embroidery yarn serves to so weaken the stocking-web as to have a deleterious effect thereon. The embroidering operation also serves to increase manufacturing costs.

It is an object of my invention to provide an attachment for full-fashioned knitting machines whereby yarn-guides can be accurately controlled to lay a yarn over a distance less than the full length of a course being knitted, as for reinforcing or for so-called split-seam work wherein sections of fabric are connected by suture seams. For this purpose I preferably employ opposed stops with conjoint controlling means arranged to move them toward or from each other incrementally, but any equivalent means or devices may be employed which will effect the purpose of the invention.

A further object of the present invention is to provide an arrangement, connection and combination of novel mechanical movements attached to a conventional flat knitting machine for attaining the results sought by the leading object.

A further object is to provide an attachment for a flat knitting machine in which is provided a plurality of thread-carrier rods, stop-mechanism for said rods comprising a shaft including a screw having reversely-threaded portions carrying oppositely movable split-seam stops, means for moving said stops from and toward the rods to effect the split-seam interlooping of adjacent yarn-sections, means including a pattern chain and reversely-acting pawls for intermittently actuating said screw in successive courses, and separate means for selectively engaging said pawls.

A still further object is to provide an attachment for a flat knitting machine in which is provided a plurality of thread-carrier rods, stop-mechanism for said rods comprising a shaft including a screw, having reversely threaded portions carrying oppositely disposed stops, operating means for moving said stops from and toward the rods to limit variably the stroke of the yarn carrier rods, means including a pattern-chain and oppositely-acting pawls for intermittently rotating said screw in successive courses, and means including a separate pattern-chain for selectively engaging one of said pawls.

Other and further objects not at this time appearing will be hereinafter referred to.

The invention consists of the novel construction herein described and finally claimed.

The nature, characteristic features and scope of the invention will be more fully understood from the following description taken in connection with the accompanying drawings forming part hereof, and in which:

Fig. 1, is a view in front elevation of a portion of one type of full-fashioned knitting machine known as the "Cotton" machine with an attachment of the invention applied thereto, machine parts not essential to the invention being omitted.

Fig. 2, is a plan view thereof.

Fig. 3, is a sectional elevation, taken on the line 3—3 of Fig. 1, the machine frame outline being indicated in dotted lines.

Fig. 4, is an enlarged end view of the stop employed.

Fig. 5, is an enlarged cross-sectional view of the special form of cam employed for intermittently rotating the clock forming or split-seam screw that operates the stops.

Figs. 6 and 7 are fragmentary views illustrating the two pattern chain mechanisms for automatically controlling the movements of the clock forming or split-seam screw.

Fig. 8, is a view of the selective control means for engaging the reversely acting pawls;

Fig. 9, is a cross sectional showing of the pawl and ratchet mounting on the screw shaft.

Fig. 2, indicates one form of stocking fabric having yarn sections with inclined clock or split seam border line ornamentation as made by means of my attachment; and

Figures 11 and 12, details of means preventing operation of my device simultaneously with a narrowing stop.

For the purpose of illustrating my invention I have shown in the accompanying drawings two forms thereof which are at present preferred by me, since the same have been found in practice to give satisfactory and reliable results, although it is to be understood that the various instrumentalities of which my invention consists can be variously arranged and organized and that my invention is not limited to the precise arrangement and organization of the instrumentalities as herein shown and described.

In practice a web of hosiery is knit upon a straight knitting machine equipped with the novel mechanism of the present invention which mechanism is capable of co-acting with respect to the web-forming needles to provide clocks or other ornamental re-inforcements which may be ornamental or useful or both, said reinforcements having zig-zag-like lines inclined to the wales and courses of the web. An example of such stocking re-inforcement, other than that shown in Fig. 10, is disclosed in letters patent granted to me under date of March 31, 1925, and numbered 1,531,349 wherein the clocks are made by a splicing yarn instead of by split-seam work. In manufacture, the stocking-web, which has selvage edges, may be knit with a main yarn in a well understood manner to that portion of the leg at which the narrowing operation takes place. At or about the time narrowing of the leg portion is commenced, additional or re-inforcing thread is presented to certain of the web-forming needles to effect formation of a clock or clocks. During formation of a clock or clocks it is to be understood that fabrication of the stocking-web, including the re-inforced heel portions, takes place in the usual and well understood manner of making full fashioned hosiery. The additional or re-inforcing thread is supplied to the web-forming needles so that zig-zag-like lines, inclined to the wales and courses of the web, are produced to effect the contour of a clock or clocks. Obviously, depending upon the contour of a clock or clocks desired, the feeding of additional thread varies. In practice I commence the formation of the clock or clocks midway of the narrowing portion of the web although obviously said formation may be started and stopped at other places and while but one clock may be formed upon a stocking web, if desired, in practice two or more are preferred, the number being immaterial.

Referring now to the attachment for making a clock or other ornamentation and referring more especially to Figs. 1 to 9 inclusive, the reference numeral 1 indicates the main frame of a flat knitting machine; 2, the front beam; 3, the back beam; 4, the center bed; and 5, the main cam shaft. Such machine may be of any well known full fashioned knitting machine type and to such my novel attachment is connected. These machines are commonly formed with a plurality of knitting sections, each of which is provided with the requisite number of yarn-guides, and the latter are mounted on longitudinally movable yarn carrier rods 6, 6, 6, 6, extending the full length of the machine and their joint movements controlled by rod-contacting stops, not shown, acting in well known manner at the ends of the machine. My invention, among other things, relates to special stops for these rods 6, 6, 6, 6, affecting the yarn-feed movements thereof, and for simplicity of showing I have indicated in the drawings only the rods themselves, it being understood that they carry thread guides and abutments such as shown in Figs. 11 and 12 and perform their usual functions as heretofore.

The special rod-stops 7, 7 (see Fig. 1) employed in my novel attachment, act in a manner similar to the action of the well known "Split-foot" stops heretofore employed in making split seam work, which stops however merely oscillated and did not travel lengthwise of the machine. In Figs. 3 and 4 of the drawings the stops are shown as having undercut portions at 10 which are desirable for split-seam work. My invention however is not limited to the use of these specific stops for this specific purpose, but they may be used for all purposes for which stops are used. With the construction illustrated in Fig. 4 it is possible to produce split-seam stitches as in the "split-foot" stocking for uniting fabric sections by the delayed partial lifting of the stops, after the arrest of the rod movements, to allow additional movement of the rods determined by the depth of the undercut portions 10 (see Fig. 4) of said stops 7, 7 this additional movement occurring after the formation of the stitches of the course and forming floats of determined length extending into the next succeeding courses of knitting, the effect being to produce ornamental border line junction seams between fabric sections of the finished fabric.

Stops such as herein illustrated are used for making spliced or plated figures on a plain fabric and for split seam work, the split seam stops being undercut as in Fig. 4 and the others not undercut as in Fig. 16. It is new to control the stops by conjoint means for moving them toward or from each other to shorten or lengthen the stroke of the same guide at both ends.

Any conventional or desirable lugs, screws or other attachments may be located on the

carrier rods for cooperating with the stops and no claim is made to such devices.

The special stop employed in my novel attachment and the mechanism for operating the same, as fully described hereinafter, provides for the introduction of this split seam anywhere in the length of the fabric, for its automatic control by pattern-chain mechanism, and for varying the spreading of said stops in successive courses to reversely incline said split-seam border lines to the wales for producing ornamental figuration of the fabric, such as clocks.

The stops 7, 7, as shown in the drawing are pivotally carried at 8, 8 in nuts 9, 9 (see Fig. 4) respectively non-rotatively mounted on the right and left threaded portions of a screw shaft 11, rotatably carried in fixed brackets 12, 12 intermediate the length of the machine, and rocking movement from and toward said carrier rods is imparted to said stops by cams 14, 14 on cam shaft 5, through levers 15, 15 operated thereby and connected by rods 16, 16 to a horizontal bar 17 slidably engaging in the rear extensions 18, 18 of the stops 7, 7; this rocking movement permitting the laying of the floats of the split-seam and the depth of the undercut portion 10 determining the number of needles over which the yarn floats, and rotary movement of the screw shaft 11 adjusting the position of said stops 7, 7 in opposite directions. The points where the abutments mounted on the carrier rods normally strike the stops 7—7 are indicated at 10', 10' (Fig. 4).

The screw shaft 11, as more clearly shown in Fig. 9, has an end extension 20 fixedly carrying oppositely toothed ratchet wheels 21 and 22, and loosely strung rockarms 23 and 24 carrying spring-pressed pawls 25 and 26 adapted to engage the respective ratchet wheels 21 and 22, a notched disk 25' (Figs. 3 and 12) and a detent 26' held yieldably in engagement with the disk in conventional manner, being preferably employed to prevent accidental turning movement of said shaft 11. In other words, the screw shaft 11 may be positively moved backward or forward by the ratchet wheels 21 and 22 but said shaft, by reason of the teeth upon said disk 25', is locked against accidental turning movement at all times. (See Figs. 1 and 3.) Pattern-control means, hereinafter fully described, determines the selective engagement of the pawls, and connecting links 27 and 28 (see Fig. 8) respectively connect the rockarms 23 and 24 (see Fig. 2) to actuating levers 29 and 29a. Rollers 30 and 31 (see Figs. 1 and 5) having a limited longitudinal movement on their respective lever-carrier studs 32 and 33, are adapted to ride upon special cams on cam shaft 5, said cams having idle paths 34 and 35 and active paths 34a and 35a for the respective rollers, (see Fig. 5) to cause intermittent rotation of the screw shaft 11 as desired. Arms 40 and 41 loosely engaging the hubs of rollers 30 and 31 and carried by horizontal shaft 42, jointly move said rollers across their respective idle cam faces 34 and 35, and a spring 43 tends to impart longitudinal movement to said shaft 42 in one direction, while a cam 45 on cam shaft 5, through bell crank 44, imparts return movement to said shaft.

To automatically control the movement of this shaft 42 and thereby control the intermittent rotation of screw shaft 11, I employ, as shown, a pattern chain 50, (see Figs. 1, 2 and 7) to which step-by-step movement is imparted from cam shaft 5 through cam 51 and link connected lever 52, (see Fig. 1) the latter having a pawl 53 acting on the ratchet teeth of chain supporting wheel 54. Studs 55 on said chain are adapted to act upon a lever 56, carrying a shaft latch-member 57, to raise and lower the latter. This latch 57, as best shown in Fig. 7, slidably bears against a fixed shaft-supporting bracket 58, and when in lowered position the wide part of the latch engages a collar 59 fixed on said shaft 42 to hold the shaft 42 and its arms in a position where the rollers 30 and 31 are on the idle faces 34 and 35 of the cams.

When a stud 55 on said chain 50 lifts lever 56 and its shaft latch member 57, the reduced lower end 60 of the latch permits the spring 43 to move said shaft until the rollers 30 and 31 ride on the active paths 34a, and 35a, of their respective cams. Upon the passing of the stud 55, the wide part of the latch member 57 will fall again into engagement with collar 59, when the shaft 42 is again moved to the right by action of cam-actuated bell crank 44. The number of studs 55 on chain 50 will determine the number of rotations of the screw-shaft 11 and the movement of the nuts 9—9, to shift the stops 7—7 controlled thereby, toward and from one another in a direction crosswise of the wales of the knitted fabric.

To cause selective engagement of the pawls 25 and 26 before referred to, and thereby determine the direction of rotation of screw-shaft 11, I preferably employ as shown, a second pattern chain 70, to which step-by-step movement is imparted by the operation of cam 35a on a lever carrying the pawl 71 (Fig. 1) to impart movement to the ratchet wheel carrying the pattern chain aforesaid having studs 72 operating a spring-pressed lever 73 (Figs. 6 and 8). Wires 74 and 75 extending over suitable pulleys, connect the lever 73 to the respective spring-pressed pawls 25 and 26, so that the movement of said lever 73 (as determined by the presence or absence of a stud 72, causes one or the other pawl to engage with its respective ratchet wheel 21 or 22) to impart the desired direction of rotation to the screw 11 through the intermittently acting levers 29 and 29a which operate

the respective pawls. A spring 74' holds the lever 73 in the position shown when no button 72 is acting on the downwardly projecting lug of the lever.

From the foregoing description it will be seen that the yarn-guide controlling stops employed in my novel attachment may be moved from and toward each other by direct cam shaft action to cooperate with the usual knitting mechanism in producing the desired spliced or split-seam ornamentation of the adjacent fabric sections, and their relative adjustment from and toward one another automatically controlled and intermittently effected in successive courses. My novel split-seam stops, it will be understood, are employed in producing fabrics having sections of separate yarns of which for illustrative purposes one type is shown in Fig. 10, or spliced areas as shown in my said patent. In the particular illustrative fabric shown in Fig. 10, three yarn carrier rods have been employed for making a split seam fabric, each having a yarn guide supplying yarn only to its respective section A, B, or C, and my oppositely movable split seam stops have caused the interlooping of these yarn sections to form the reversely inclined split seam border lines D.

Each of the carrier bars for sections A and C is stopped on its outward movement by the conventional end stops at the ends of the machine and on its return movement by a stop 7. The carrier rod for section B has an abutment or abutments moving between stops 7, 7 and striking against one or the other at the ends of its throw. It would also be possible to provide abutments on this last-named rod outside the stops so as to strike alternately against the outer faces of the stops. Additional sections could readily be provided for by equipping differently located abutments so that the travel of the guides would cover different vertical stripes or yarns of the fabric.

Mounted on a stud 98 adjacent the main cam shaft 5* is the usual lever cam 99 which controls the narrowing mechanism, and attached thereto, is an arm 92 (Figs. 11 and 12) which when the lever cam goes into action moves in the direction of the arrow (Fig. 11) against the collar 93 moving therewith the shaft 94 and the block 95 attached to the end thereof, into the path of travel of the collar 96 fixed to the shaft 42* and prevents same from operating. It will thus be seen that during the narrowing of the stocking the shaft 42* which controls the operation of the design mechanism is prevented from working. A spring 97 tends to normally hold the block 95 out of the path of collar 96.

The purpose of preventing operation of the screw-actuating means at this time arises out of the fact that if such means should happen to operate during narrowing the sinkers would cut off the yarns at the fabric and so cause press-offs and seconds.

What I claim is:

1. In a straight knitting machine having cooperating yarn guide carrier bars, a pair of opposed stops for certain of said carrier bars which have a stroke less than the full width of the fabric being knitted, and a reversely threaded spindle for moving said stops toward and from each other to vary the stroke of the bars controlled by said stops.

2. In a straight knitting machine having cooperating reciprocatory yarn guide carrier bars, a reversely threaded spindle, stops connected to the spindle positioned to limit the traverse of certain of the cooperating carrier bars to less than the full width of the cloth being knitted, and pattern controlled means for turning said spindle to vary the distance between said stops.

3. A device as in claim 2, said pattern controlled means being constructed and arranged to turn said spindle either to increase or to decrease the distance between said stops.

4. In a straight knitting machine, yarn guide carrier bars having a stroke less than the full width of the fabric being knitted, abutments on said carrier bars, a reversely threaded spindle, opposed stops for engagement by said abutments, said stops being operated by the reversely arranged threads of said spindle to vary the distance between them, and pattern controlled means for rotating said spindle.

5. In a straight knitting machine having guides for one or more yarns knitted in for less than the full length of a course, the combination of carrier bars for said guides, a reversely threaded spindle parallel to said bars, stops in the path of said abutments said stops being connected to the reversely threaded parts of said spindle, and pattern controlled means for rotating said spindle to vary the distance between said abutments.

6. In a straight knitting machine, yarn guide carrier bars including one or more bars having a stroke less than the full width of the fabric being knitted, abutments on said carrier bars, a reversely threaded spindle, opposed stops supported on the reversely threaded portions of said spindle for engagement by said abutments, and means for rotating said spindle.

7. In a straight knitting machine having reciprocating yarn guide carrier bars, a reversely threaded spindle, stops connected to the spindle positioned to limit the traverse of certain carrier bars, pattern controlled means for turning said spindle, and means for preventing operation of said means during the narrowing operation.

8. In a straight knitting machine having reciprocating yarn guide carrier bars, a reversely threaded spindle, stops connected to

the spindle positioned to limit the traverse of certain carrier bars to a distance less than the width of the fabric being knitted, pattern controlled means for turning said spindle in either direction, and means for preventing operation of said means during the narrowing operation.

9. In a straight knitting machine, a set of yarn guide carrier bars, stops for said bars said stops having undercut portions normally out of operative relation to said bars, means for moving said stops toward and from each other, and means to move the stops so as to bring the undercut portions into operative relation to said bars, thereby permitting delayed additional movement of said bars.

10. In a straight knitting machine, a set of yarn guide carrier bars, pivoted stops for said bars said stops having undercut portions, means whereby the stops may be caused to approach or recede from each other, and pattern-controlled means to tilt the stops to bring the undercut portions into operative relation to said bars, thereby permitting delayed additional movement of said bars.

11. In a straight knitting machine, a set of yarn guide carrier bars, a reversely threaded spindle parallel to said bars, nuts on the reversely threaded portions of said spindle, stops operated by said nuts for limiting the movement of said carrier bars said stops having undercut portions, pattern controlled means for rotating the spindle to vary the distance between the stops, and means for moving the stops so as to bring the undercut portions into operative relation to said bars thereby permitting delayed additional movement of said bars.

12. In a straight knitting machine, a set of yarn guide carrier bars including one or more bars having a traverse less than the width of the fabric being knitted, a threaded spindle, a stop for limiting the traverse of a carrier bar in one direction said stop having an undercut portion and being connected to said spindle, means for turning the spindle to move the stop lengthwise of the bar to vary the traverse of the bar, and means for moving the stop to bring the undercut portion into operative relation to said bar to permit delayed additional movement of the bar.

13. In a straight knitting machine, a set of yarn guide carrier bars including one or more bars having a traverse less than the width of the fabric being knitted, a threaded spindle, a nut on the spindle, a stop pivotally supported by the nut for limiting the traverse of a carrier bar in one direction said stop having an undercut portion, means for turning the spindle to move the stop lengthwise of the bar to vary the traverse of the bar, and means for moving the stop on its pivot to bring the undercut portion into operative relation to said bar to permit delayed additional movement of the bar.

14. In a straight knitting machine, a set of yarn guide carrier bars for operating yarn guides traveling less than the full width of the fabric being knitted, a spindle having reversed screw threads, stops operated by said spindle, means for turning the spindle in either direction, pattern-controlled means for determining the time of operation of the spindle, and pattern-controlled means for determining the direction of rotation of the spindle.

15. In a straight knitting machine, a set of reciprocating yarn guide carrier bars including bars having a stroke less than the width of the fabric being knitted, pair of stops for said guides, a reversely threaded spindle extending lengthwise of the machine, the respective stops being connected to the reversely threaded portion of the spindle for moving the stops simultaneously toward and from each other, pattern controlled means for determining the time for such movement, and correlated pattern controlled means for independently determining the direction of such movement.

16. In a straight knitting machine having a main cam shaft, a set of yarn guide carrier bars, a spindle having reversed screw threads, stops connected to said spindle said stops limiting the travel of the carrier bars, means for turning the spindle in either direction, pattern-controlled means for determining the time of operation of the spindle including a rod extending lengthwise of the machine, connections from the main cam shaft for moving the rod in one direction, a detent for holding the rod, and means including a pattern chain for releasing the detent to permit the rod to return.

17. In a straight knitting machine, a set of yarn guide carrier bars, a spindle having reversed screw threads, stops connected to the spindle said stops limiting the travel of said carrier bars, reversible pawl and ratchet means for turning the spindle, pattern-controlled means for determining the time of operation of the spindle including a rod extending lengthwise of the machine, connections from the main cam shaft for moving the rod in one direction, a detent for holding it, means including a pattern chain for releasing the detent to permit the rod to return, means for determining the direction of rotation of the spindle including a second rod parallel to the first, means on the first rod for moving the second in one direction, a detent for holding the second rod, and connections from said pattern chain for releasing the second rod.

18. In a straight knitting machine having cooperating yarn guide carrier bars, a pair of opposed stops for a carrier bar having a stroke less than the full width of the fabric being knitted, and a rod-like element having

means to move said stops toward and from each other longitudinally of said element and to hold said stops at various distances from each other.

19. In a straight knitting machine having cooperating yarn guide carrier bars, means for making a fabric with sections connected by suture seams including a pair of opposed stops for a carrier bar supplying yarn to one of said sections, and a reversely threaded spindle for moving said stops toward and from each other to vary the stroke of said bar.

20. In a straight knitting machine having cooperating reciprocatory yarn guide carrier bars, means for knitting a fabric with sections connected by suture seams including a reversely threaded spindle, stops connected to the spindle positioned to limit the travel of a carrier bar supplying yarn to one of such sections, and pattern controlled means for turning the spindle to increase or decrease the distance between said stops.

21. In a straight knitting machine having cooperating yarn guide carrier bars, means for knitting a fabric with sections connected by suture seams including a pair of opposed stops for a carrier bar supplying yarn to one such section, and a rod-like element carrying the stops, and means to move said stops toward and from each other longitudinally of said element and to hold said stops at various distances from each other.

22. In a full fashioned knitting machine comprising a plurality of thread-carrier rods, stop-mechanism for said rods comprising a pair of oppositely traversing split-seam stops which at every step of traverse move toward or away from each other, means for moving said stops from and towards the rods to effect the split-seam interlooping of adjacent fabric sections, and means for intermittently moving said stops to reversely incline the split-seams to the lines of the wales.

23. In a full fashioned knitting machine comprising a plurality of thread-carrier rods, stop-mechanism for said rods comprising a screw shaft having reversely-threaded portions carrying oppositely movable split-seam stops adapted to control the split-seam interlooping of adjacent fabric sections, and means for intermittently actuating said screw in successive courses to reversely incline the split-seams to the lines of the wales.

In testimony whereof, I have hereunto signed my name.

RICHARD E. SCHLETTER.

DISCLAIMER

1,713,638.—*Richard E. Schletter*, Philadelphia, Pa. ATTACHMENT FOR FLAT-KNITTING MACHINES. Patent dated May 21, 1929. Disclaimer filed January 18, 1936, by the assignee, *Textile Machine Works*.

Hereby enters this disclaimer to claim 10 of said Letters Patent.

[*Official Gazette February 25, 1936.*]

[fols. 505-515]

PLAINTIFF'S EXHIBIT NO. 2

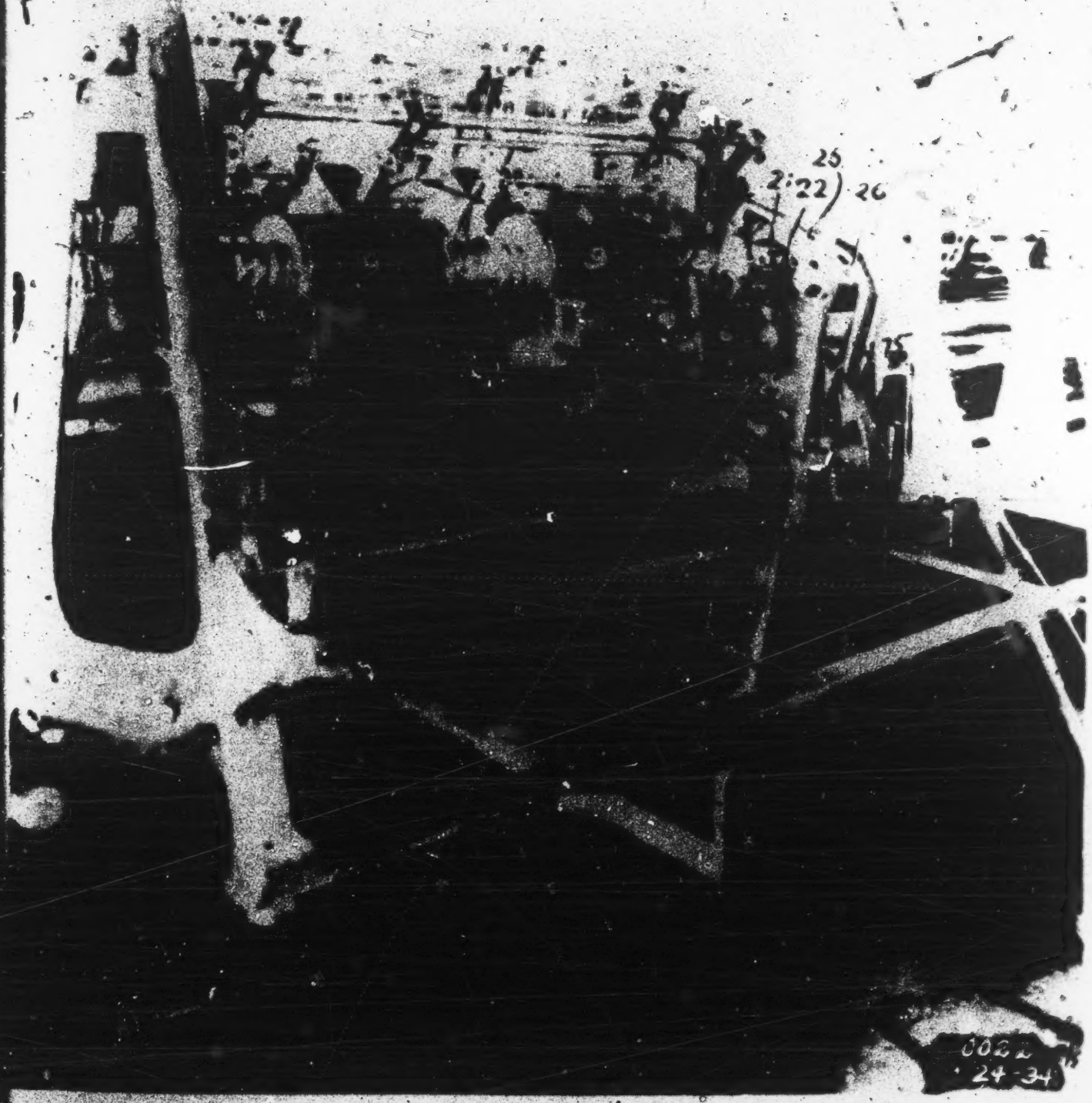
25
2:22 26

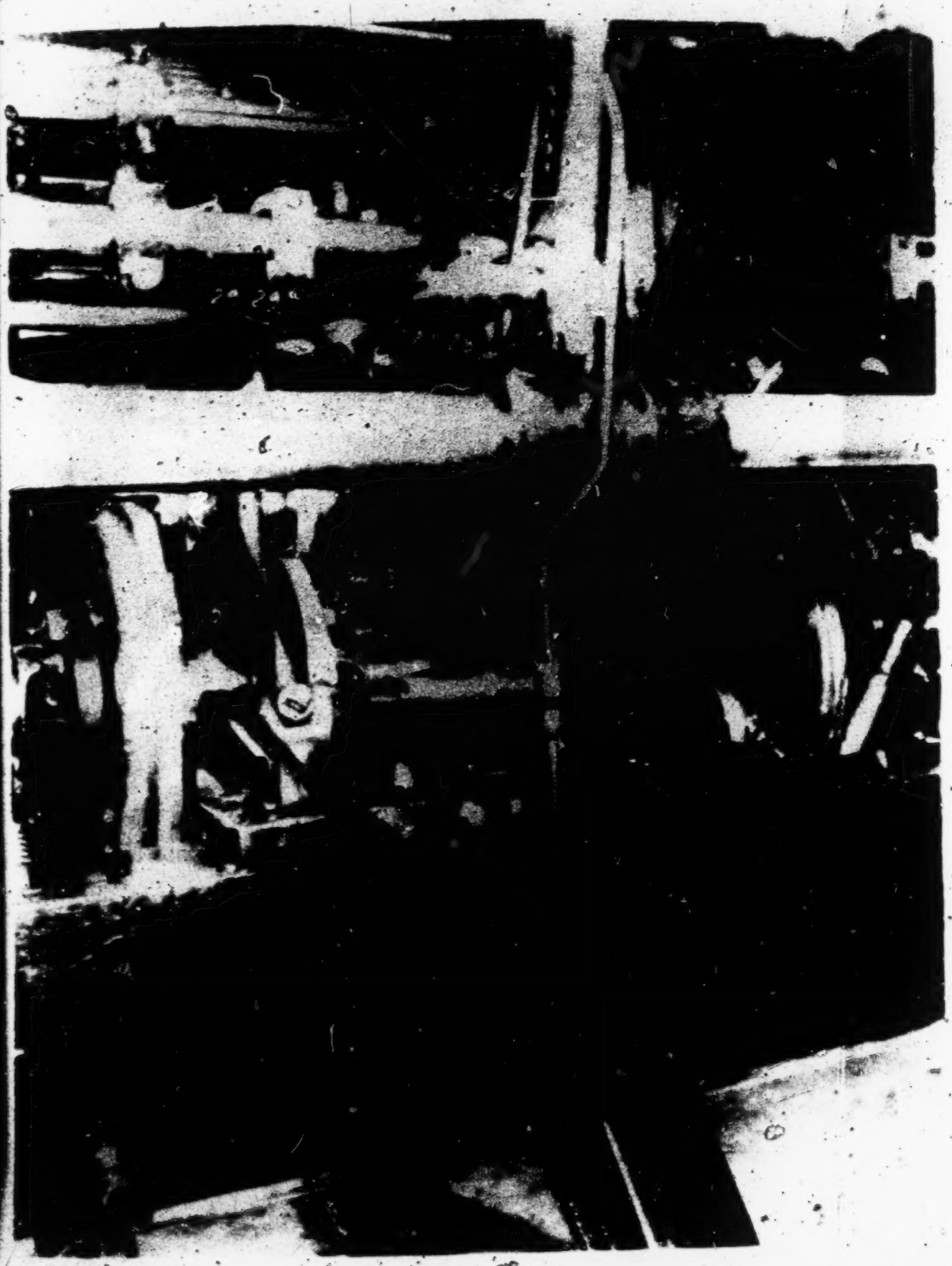

PLAINTIFF'S EXHIBIT No. 10

PLAINTIFF'S EXHIBIT NO.
CARRIER MOTION
SCALE: HALF SIZE

Fig.1

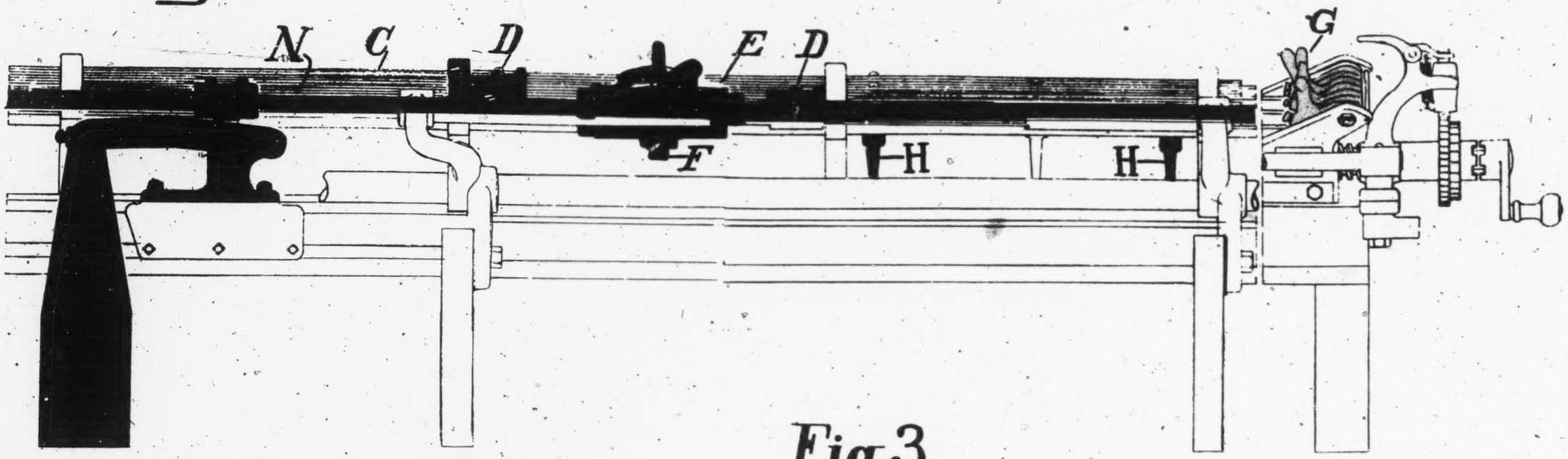

Fig.2.

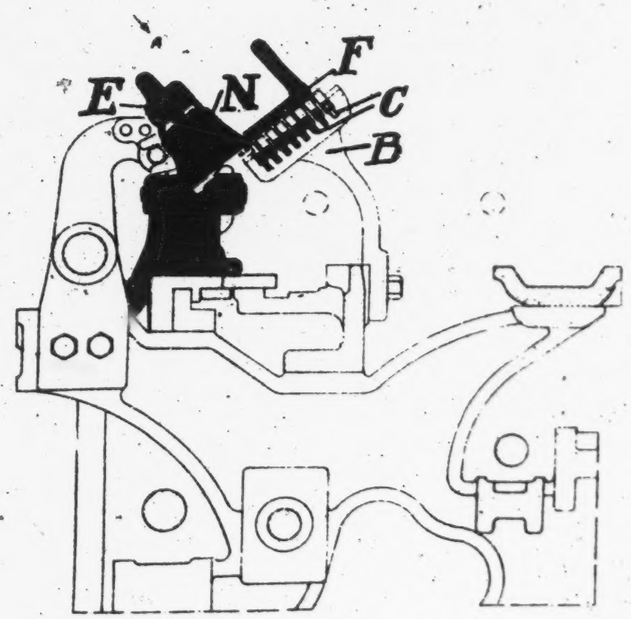

Fig.3.

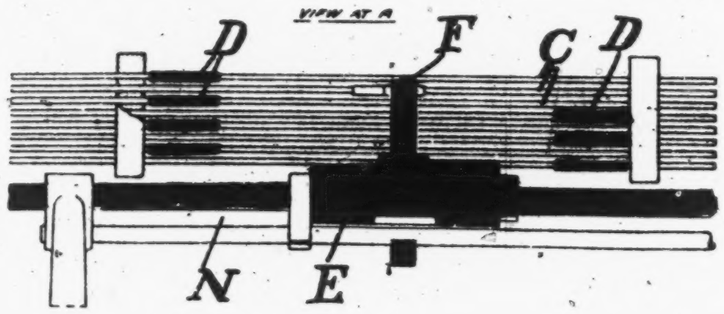

PLAINTIFF'S EXHIBIT NO. 15

517 366

PLAINTIFF'S EXHIBIT No

Enlarged drawing of Schletter's Attachment.

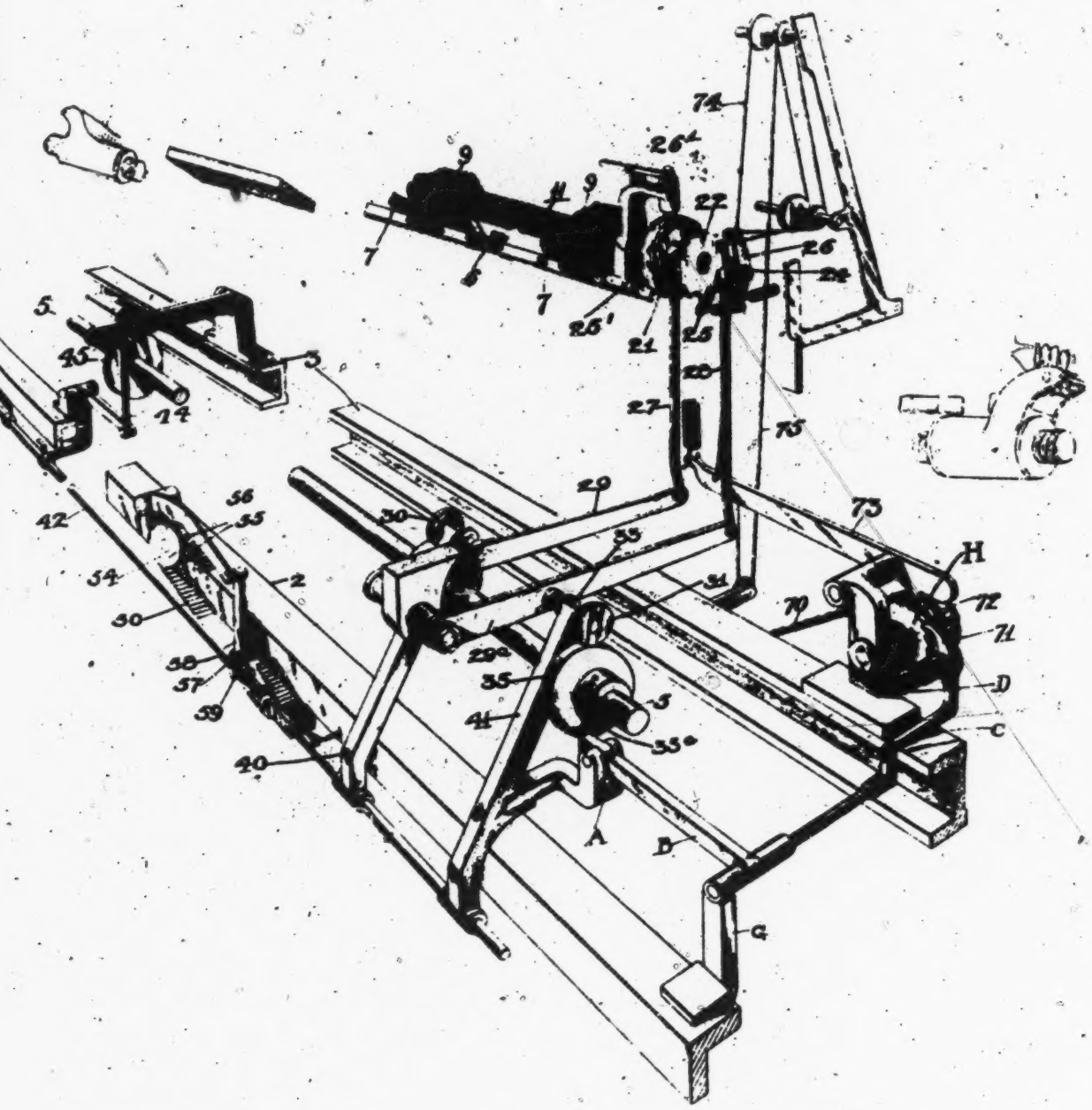

Page Tightly Bound

PLAINTIFF'S EXHIBIT No. 16 518

PLAINTIFF'S EXHIBIT No

Leg blank with split seam inserts

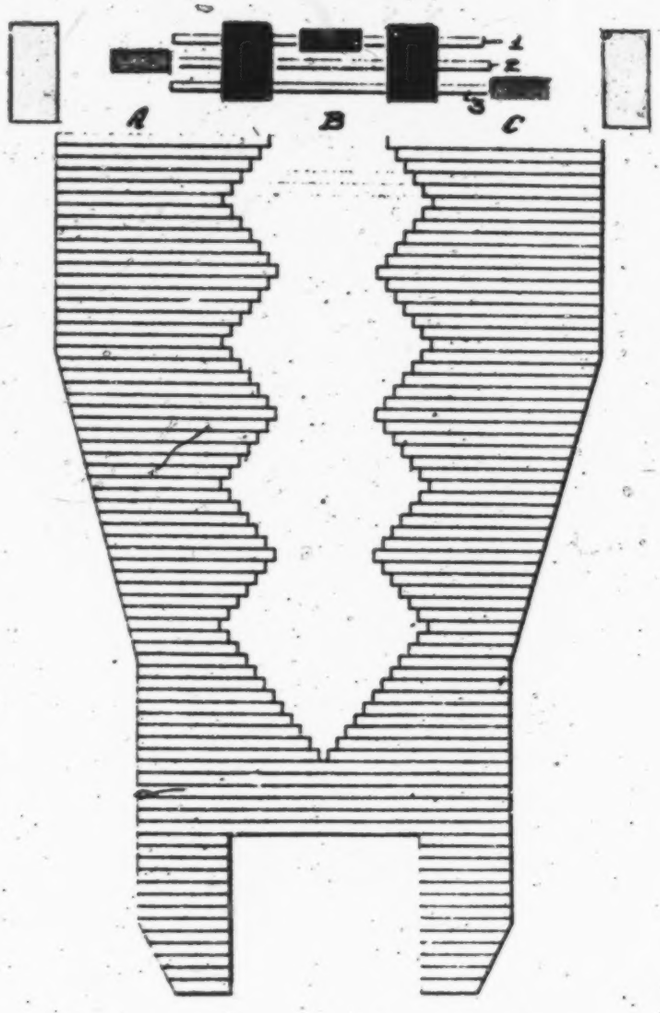

PLAINTIFF'S EXHIBIT No. 16 519

PLAINTIFF'S EXHIBIT No

Leg blank with ornamental insert

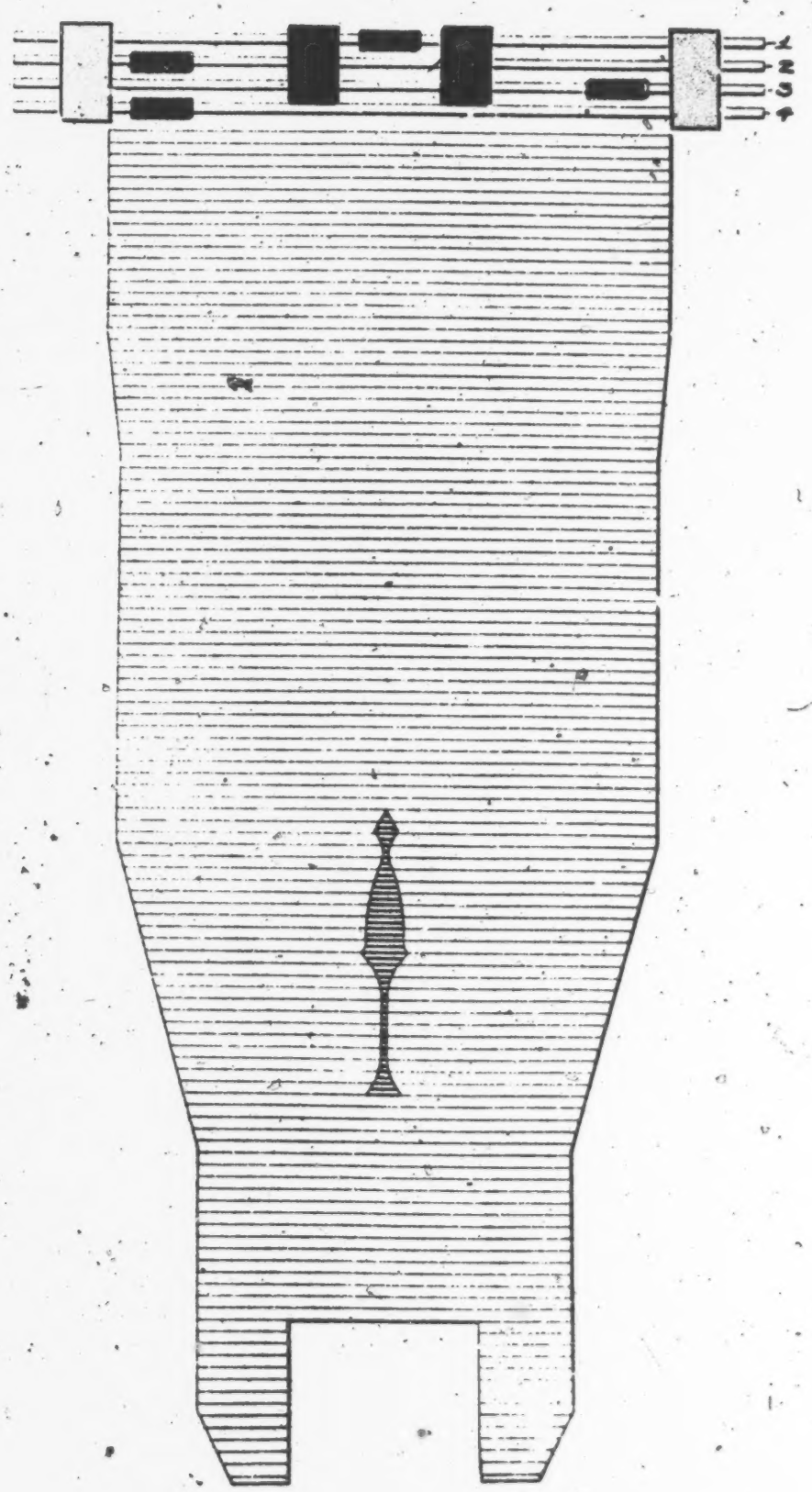

PLAINTIFF'S EXHIBIT No. 20 520

PLAINTIFF'S EXHIBIT No

Leg blank with shadow clocks

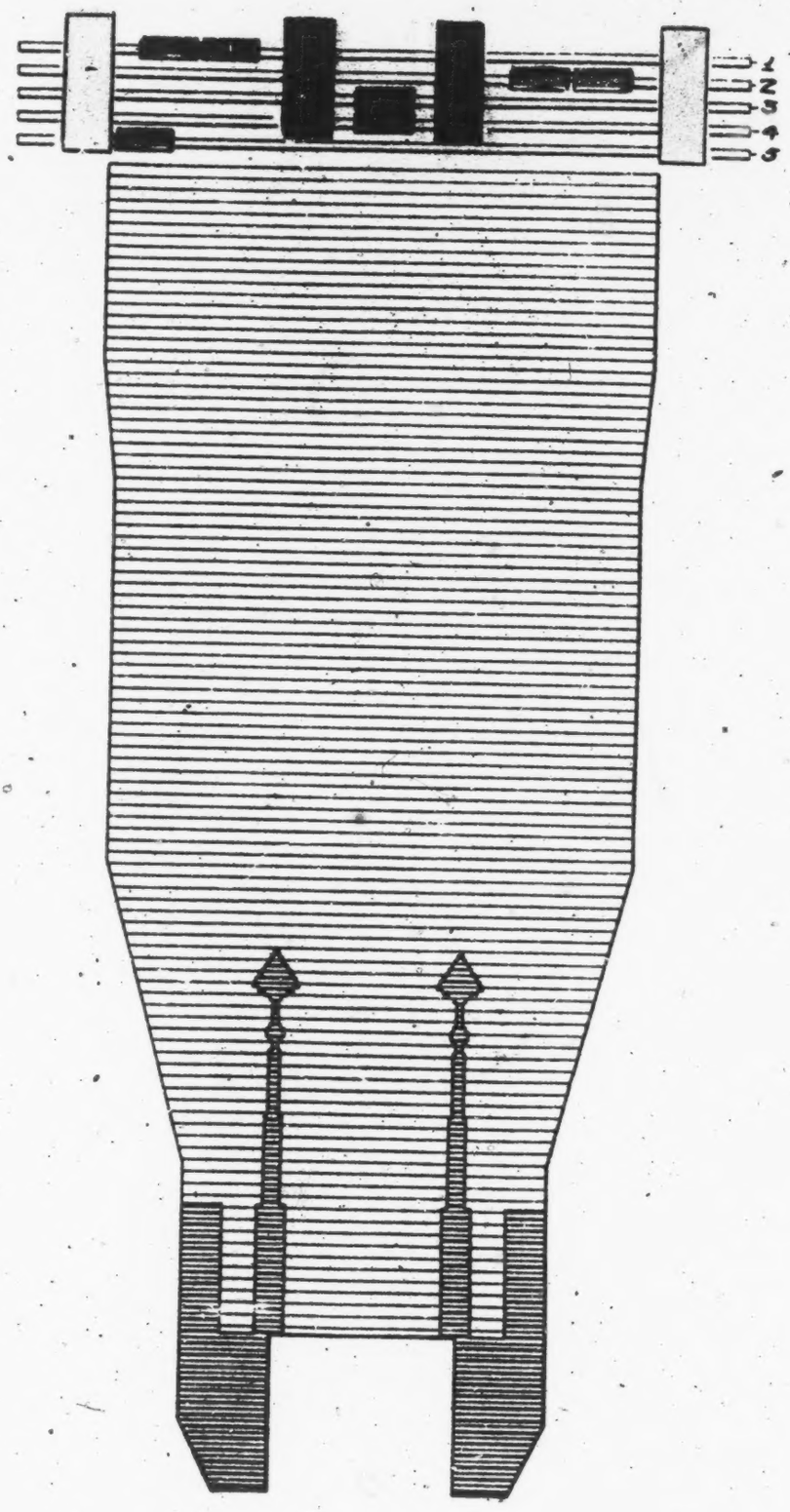

PLAINTIFF'S EXHIBIT No. 24

370

521

PLAINTIFF'S EXHIBIT No

Leg blank with window clocks

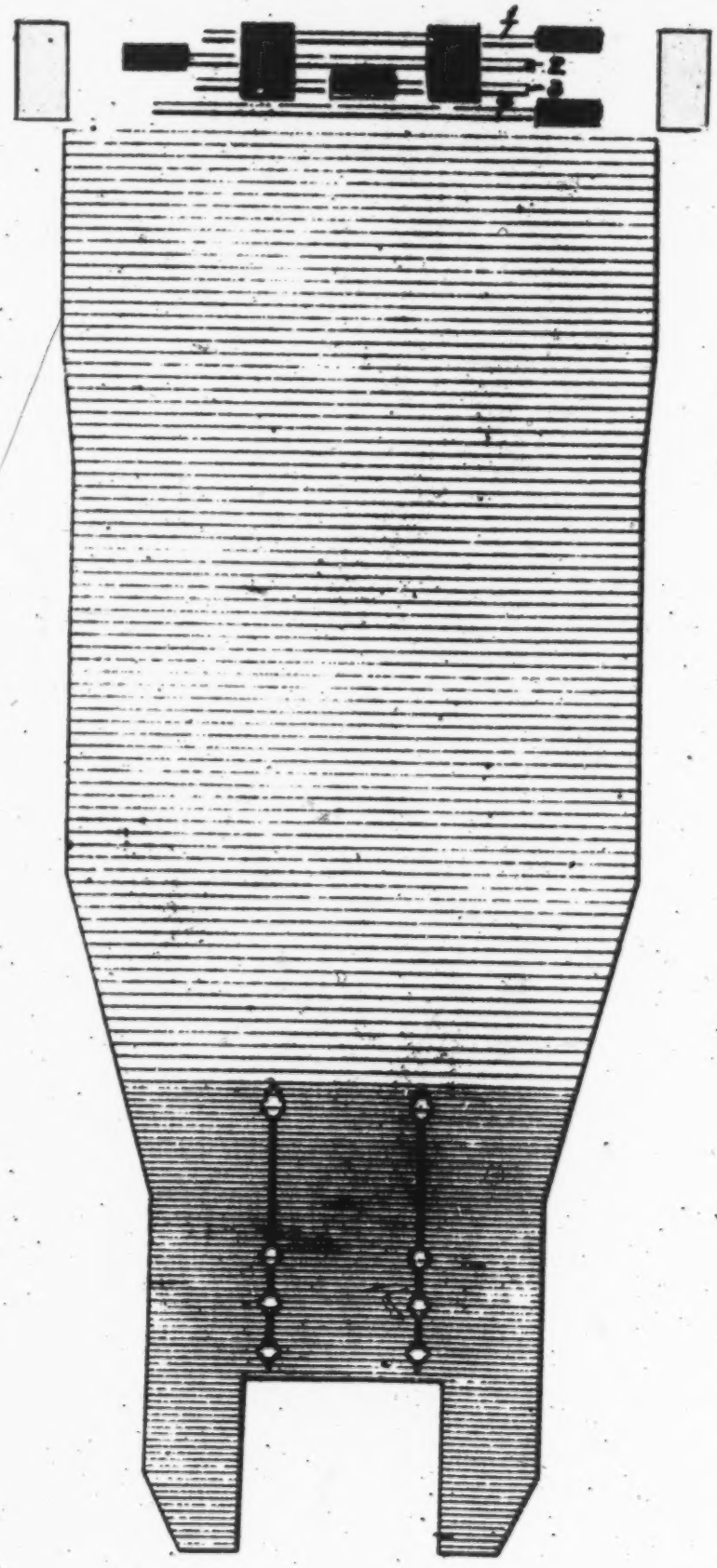

371

522

PLAINTIFF'S EXHIBIT No. 25

PLAINTIFF'S EXHIBIT No

Leg blank with ornamental reinforcements

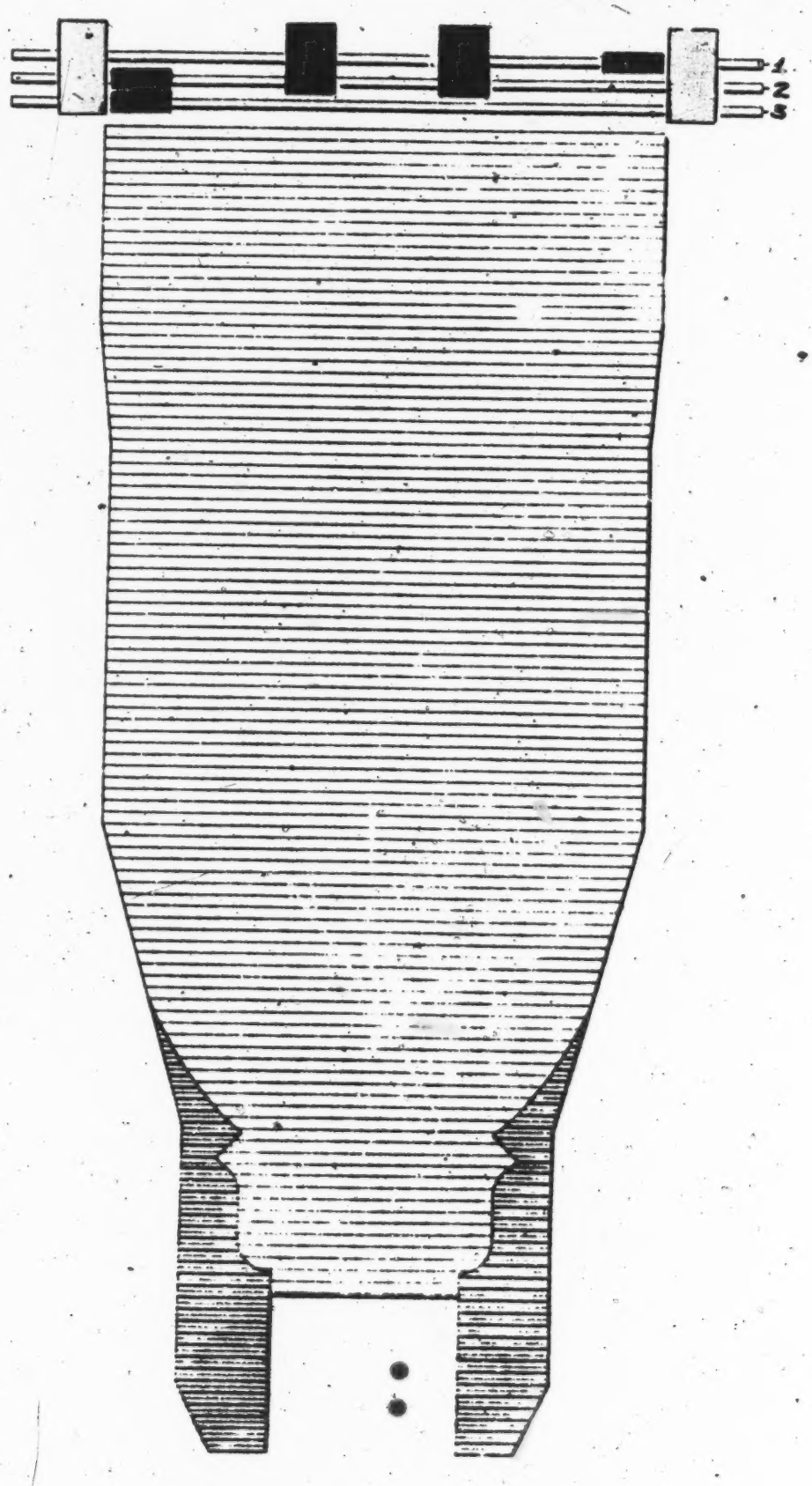

523 372

PLAINTIFF'S EXHIBIT NO. 28

PLAINTIFF'S EXHIBIT No

Complete stocking blank

373

PLAINTIFF'S EXHIBIT No. 32 524

The "READING" RECORD

VOL. I FEBRUARY, 1930 NO. 2

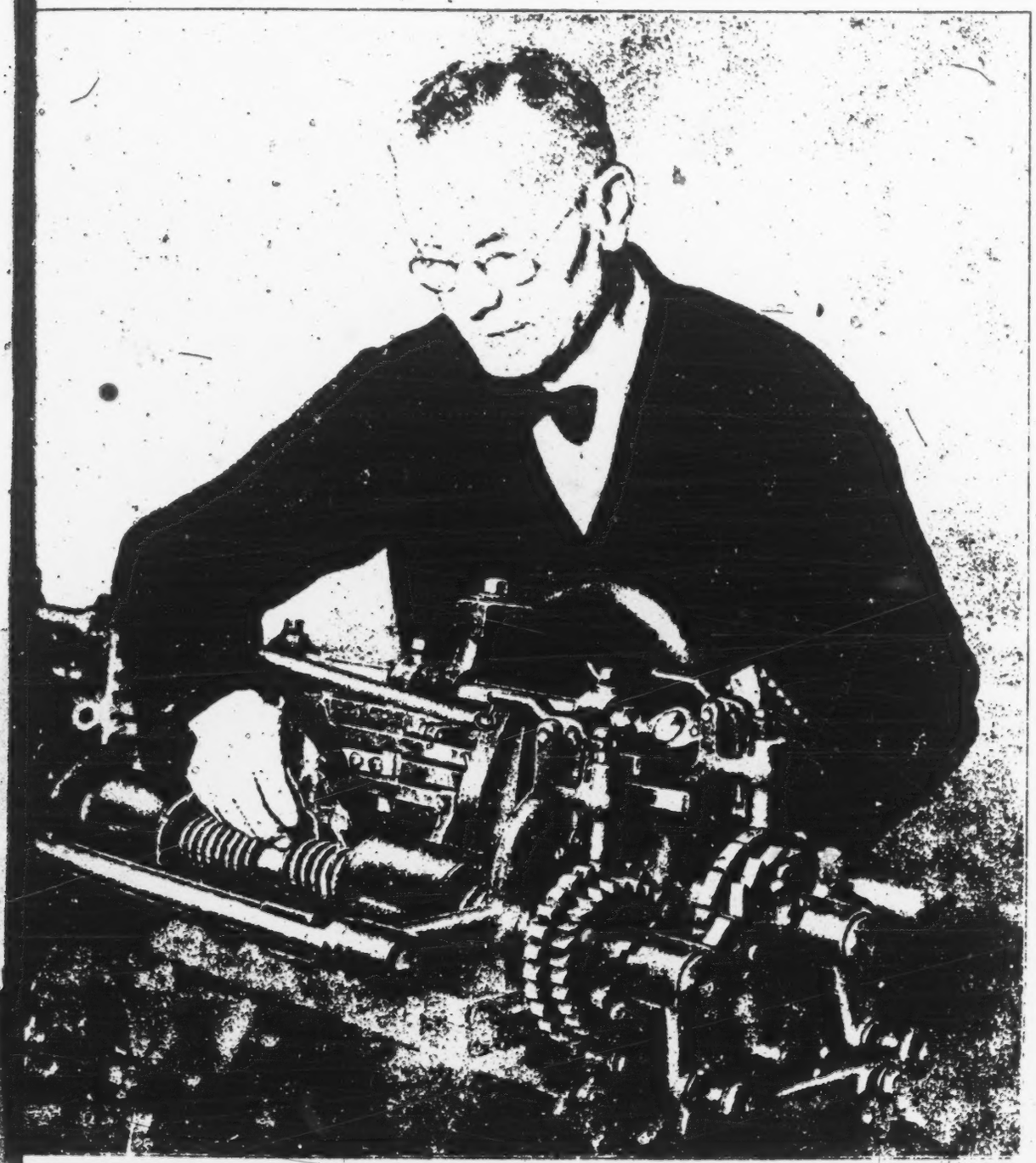

"Accuracy First, Cost Second"

Page Tightly Bound

374

525

"ACCURACY FIRST, COST SECOND"

Accuracy is one of the main features of the "Reading" Full-Fashioned Knitting Machine and no expense is spared in obtaining this end. A staff of highly trained men is maintained who subject every part of the machine to a very rigid inspection schedule. Every part must go out *right*, even though it may mean the scrapping of valuable material.

One of the most exacting parts of the full-fashioned machine is the Narrowing Rod Spindle and the Carrier Rod Spindle. These parts are used for furnishing the proper movement to the Narrowing Points and for changing the Carrier Rod travel when reducing the width of the fabric, therefore, it is necessary that they be absolutely accurate. The slightest imperfection in the Narrowing Spindle would prevent the Narrowing Points from meshing properly with the Needles, thus resulting in menders, or seconds. Periodic tests of the spindles are made by the Bureau of Standards and recent tests have shown that the error in distance between two threads has been only from .0002 to .0004 of an inch.

The highest class of workmanship that it is possible to obtain and the close inspection given to the Narrowing Rod and Carrier Rod Spindles are responsible for this amazing accuracy, and are responsible for the fact that of the several thousand now in use it has not been necessary to replace a single spindle.

The illustration on the front page shows Mr. T. Eberly, head of the Inspection Department, examining one of these spindles before the machine is finally shipped from the plant. Mr. Eberly has been in the employ of Textile Machine Works for 34 years.

SHADOW CLOCK ATTACHMENT

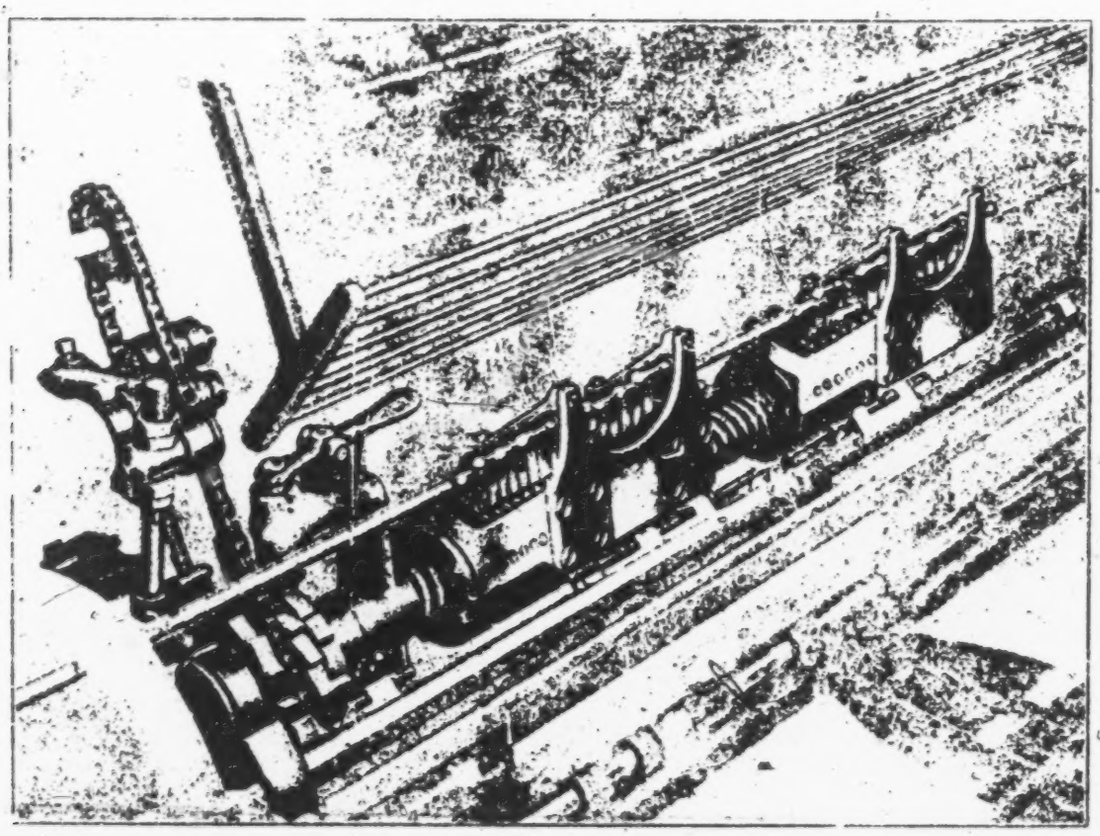

FIGURE 1

The function of the Shadow Clock Attachment is to furnish the additional stops necessary in the formation of closed designs on the fabric, that is, designs that are made by the use of an extra thread, either of the same color as the main yarn or of a contrasting color. An attachment of this type furnishes the means for producing an almost infinite number of fancy heel designs such as those

37-

hown in the accompanying illustrations. It can lso be used for producing various designs on the oot of the stocking.

"Reading" Shadow Clock Attachments are apable of making numerous reinforcing designs, he lines of which make an angle with the wales and ourses of the fabric and the steps of which cover a pace of two needles for each step. Several arangements have been developed for making such designs, among which are the Single Shadow Clock Brackets for regular left Reinforced Selvage Head and Double Shadow Clock Brackets for regular left and right side Reinforced Selvage Head. Figure 1 shows the Left Side Double Shadow Clock Attachment and Figure 2 shows the Single Shadow Clock Attachment. The only difference between these varying arrangements is that the Double Shadow Clock Brackets on both right and

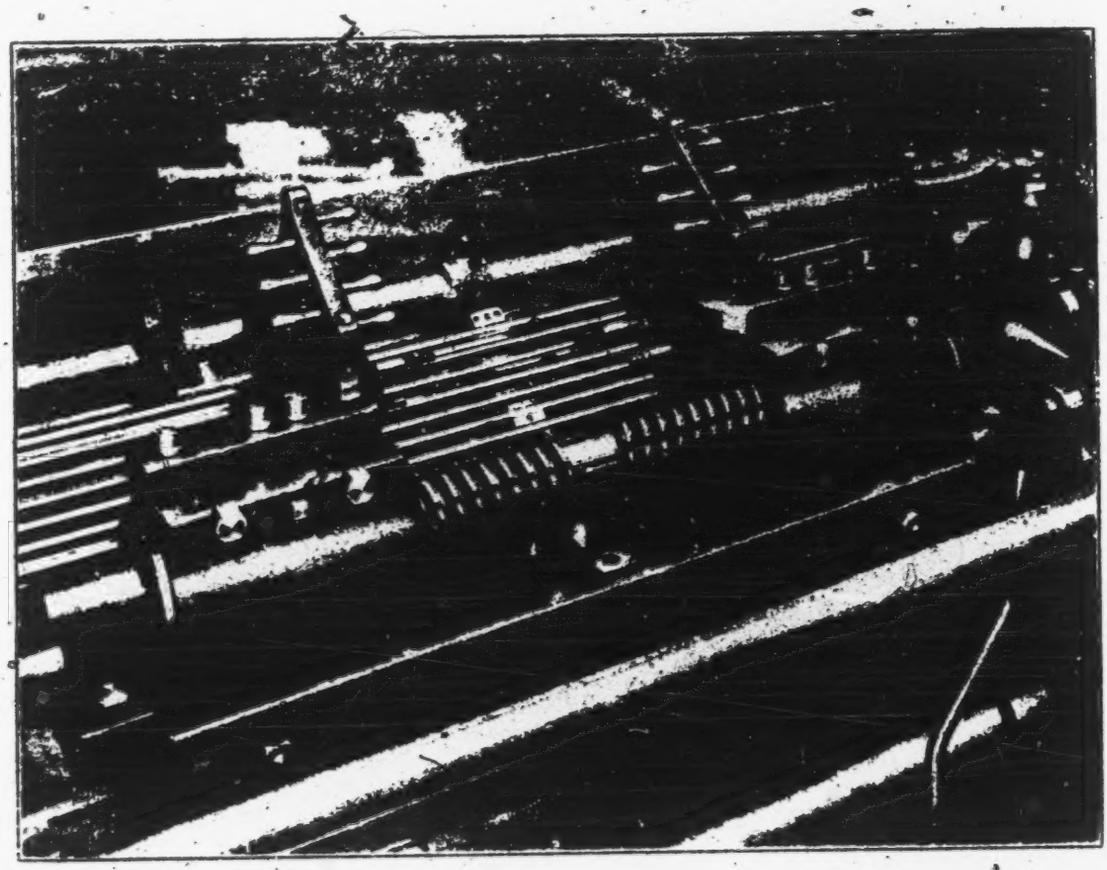

FIGURE 2

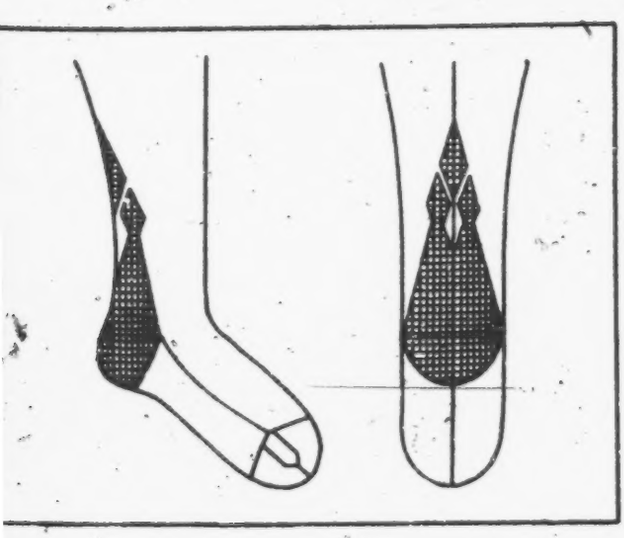

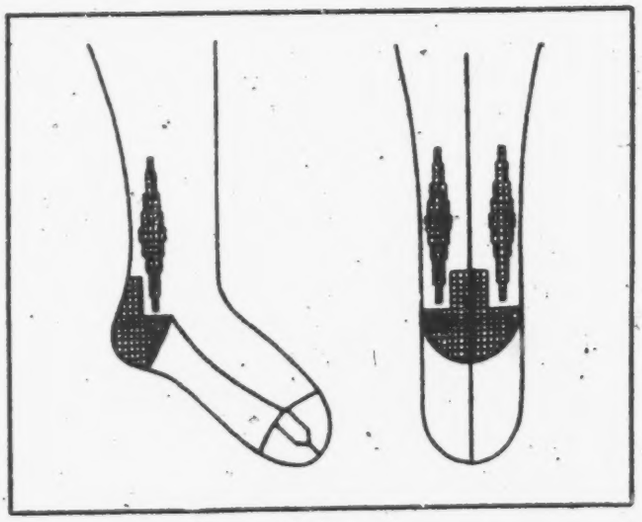

FIGURE 4

left side Reinforced Selvage Heads give a larger number of carrier rod combinations, and of course it is natural that the greater number of carrier rod combinations should be capable of producing a wider range of designs.

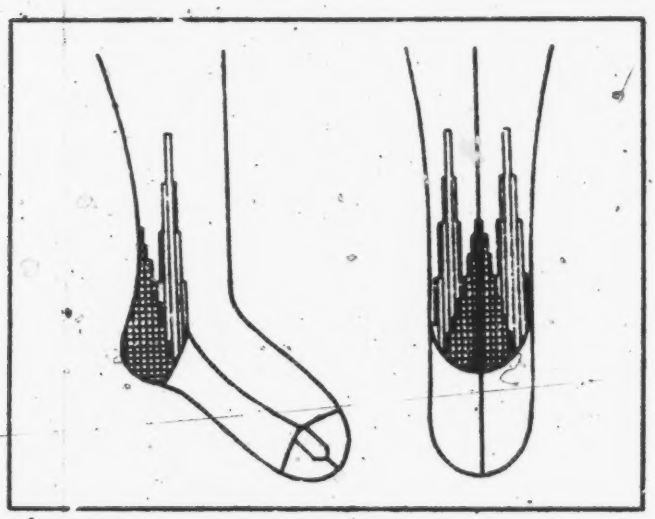

FIGURE 5

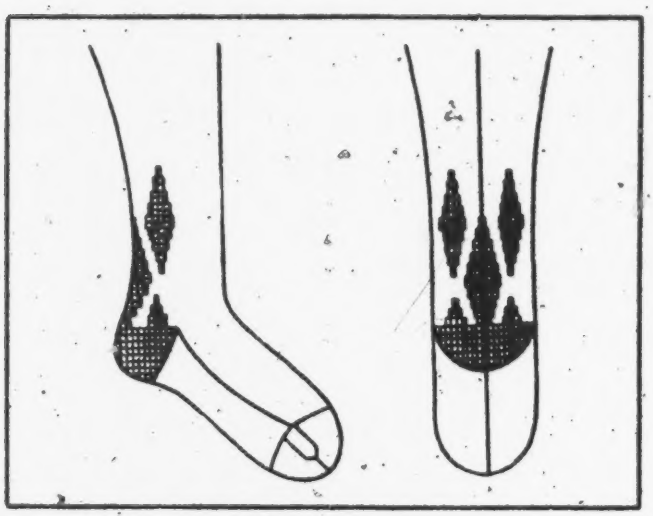

FIGURE 6

A Double Shadow Clock Bracket affords a great advantage over the Single Bracket. Though it is possible to produce many intricate designs with the Single Bracket it is much easier, requires less time, and less expenditure of energy on the part of the knitter when the Double Bracket is used. This is principally because the Single Bracket gives only two stop combinations for each carrier rod, while the Double Bracket gives four. The stop combinations are increased to eight when the Right Side

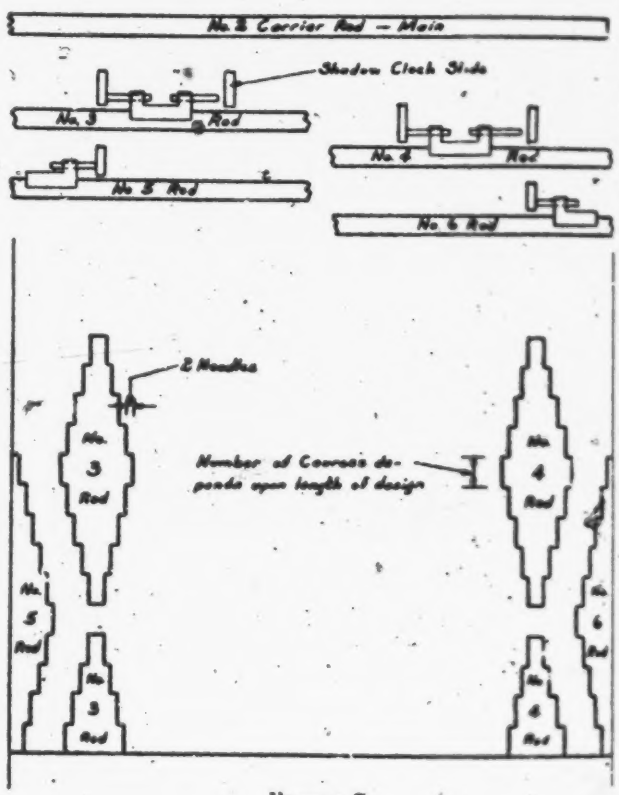

FIGURE 7

Reinforced Selvage Head with Double Brackets is attached to the machine, thus doubling the possibilities of the machine for producing fancy Shadow Clock designs. Other combinations may be obtained by re-setting the carrier rod stops.

Figures 3 to 6 show a few of the heel designs that can be produced with this attachment and Figure 7 illustrates a suggested method of making the design shown in Figure 6. Since the reversing motion and the operation of the Reinforced Selvage Head by the Chain Motion make this a semi-automatic attachment, it would only be necessary to stop the machine to lay in the No. 5 and No. 6 carrier rods.

THE WYOMISSING TRADE SCHOOL

On August 23, 1927, the Textile Machine Works approved a plan establishing the Wyomissing Trade School, then known as the Textile Machine Works' Educational Department.

The object of this school is to develop the very highest type of mechanic possible. Its establishment came about through the scarcity of mechanics skilled in the art of manufacturing, erecting and operating the full-fashioned knitting machine. This shortage is due to the fact that the Textile Machine Works is America's only large manufacturer of this type of machine, and also that

restricted immigration had made it impossible to secure skilled mechanics from abroad. The objective is obtained through a process of cooperative education which supplemented the then existing apprenticeship that had been in successful operation for a number of years.

Cooperative education consists of a series of alternating experiences in the shops and in school. In the shops, the students apply themselves to regular production work, thereby learning the practical end of their trade. In the school they are taught the theoretical bases on which the trade is founded. Correlatively, as the apprentice studies, he learns to apply and as he works, he learns the need of study. This combination of practical work in the shops and theoretical study in the school has been said to be the most perfect education that the world has ever seen. It is not a new movement by any means as it was first practiced in Scotland some 80 years ago, yet it is only recently that the plan has received the attention which its intrinsic advantages merit. In America, it was first used by the University of Cincinnati under Dr. Herman Schneider, in 1906. Since then it has been adopted widely with much success.

In the plan used by the Textile Machine Works, the apprentices are divided into two groups, one of which is working in the shops while the other is attending school and they alternate back and forth every two weeks. Aside from the theoretical training received, a very important advantage of the cooperative scheme is that it virtually doubles the capacity of the shops to train apprentices. In the shops the apprentices are routed through one department after another for a period of four years. During this time they receive experience in as many departments as feasible where they learn the operation of all of the usual types of machine tools such as the drill press, milling machine, lathe, shaper, planer, and a number of other machines of a special type. Correlated with this shop experience is the theoretical work in the school where the apprentices spend one-half of their time for two and one-half years of the four year course. All or part of the first six months is spent in the shops, this being a probationary period in which an attempt is made to determine whether the apprentice is fitted for the trade he wishes to follow. He then spends the next two and one-half years alternating back and forth between shop and school as previously mentioned. All of his fourth year is spent in the shops as it is during this period that he receives his most valuable practical experience. In the school he studies shop mathematics, shop practice, physics, chemistry, mechanical drawing, English, economics, and civics. Shop mathematics includes a study of arithmetic, algebra, trigonometry, mechanics, and the strength of materials; all considered in the light of their relationship to shop work. Shop practice includes a study of the care and use of small tools such as drills, taps, dies, and reamers; precision instruments such as scales, micrometers, calipers, and gauges of various kinds. This study also includes the proper grinding of cutting tools, also the care and operation of the machine tools themselves and such other special features as the chasing of threads and turning of tapers on a lathe and indexing on the milling machine. During the last two semesters the knitting machine itself is taken up in detail. In physics is studied the natural laws by which all machines operate and the object of chemistry is to teach the influences of the elements which enter into the construction of machinery on each other.

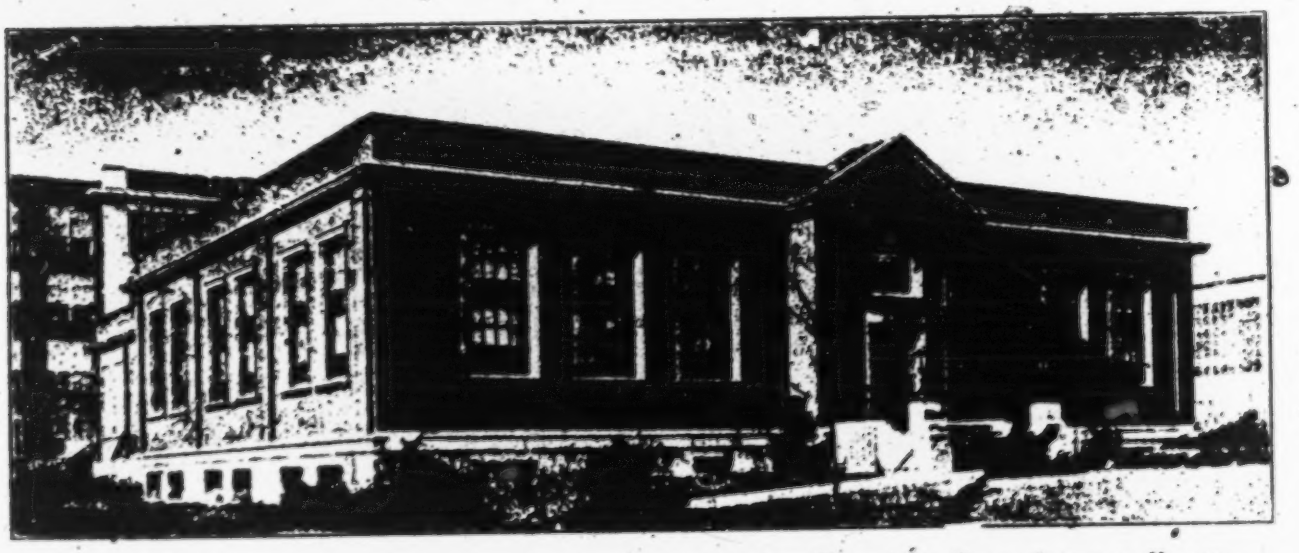

Dispensary Building of the Wyomissing Industries in which the Wyomissing Trade School is Housed

By this is meant the demonstration of the harmful influences that phosphorous and sulphur have on cast iron and steel; why carbon, silicon, nickel, manganese, chromium, and other elements exercise a beneficial influence; why brass is used in some cases and bronze in others, etc. In mechanical drawing is taught the usual geometric problems, the intersection and development of surfaces, orthographic projections and in the latter part of the course, the design of cams and special automatic motions such as are so frequently used in the knitting machine. English is included in the course in order to enable the student to express himself briefly yet adequately. Economics is taught in order to give the student an understanding of the laws by which all business—of which industry is a part—is conducted and civics is included in order to make clear the foundations of the American form of government with the object of developing a high type of citizen.

Mechanical Drawing Classroom

Candidates for an apprenticeship must first apply to the employment department of the Textile Machine Works where they are passed upon for their fitness for shop work. Candidates should be boys between 16 and 18 years of age who have had at least two years of high school instruction—more is preferred—who are physically fit and whose eyesight is unimpaired. After qualifying from the shop viewpoint, candidates are sent to the Medical Department, where their physical fitness is passed upon and finally to the Trade School where they are given an examination to determine their mental qualifications. Having successfully passed these various barriers, the candidate is admitted to an apprenticeship and starts as soon as conditions permit. As the number of applicants is greater than the capacity of the shops to train apprentices, a very careful selection is made and a waiting list is maintained. The first group of 22 completed the work of the school last July. Most of these are in the tool room, on the erecting floor or in the drafting room of the Textile Machine Works indicating that successful careers are ahead of those who properly apply themselves.

During the apprenticeship, the rates of pay are 25, 28, 30, and 33 cents per hour for the first, second, third, and fourth year respectively and these rates are paid for the time spent in the school as well as for time spent productively in the shops. Inasmuch, however, as the number of hours spent per week in the school is less than the number of hours per week in the shops, the actual compensation while attending school is proportionately less. Forty-four hours constitutes a school week

379

530

and fifty-seven and one-quarter a shop week. In addition, a two hour bonus is paid per week for perfect attendance and a bonus of $200 at the successful conclusion of the four-year apprenticeship.

Courses are now maintained for machinists, pattern-makers, and electricians. A large number of the former can be accommodated and relatively few of the latter two. At the present there are 113 machinist apprentices, 9 drafting apprentices, 3 pattern-maker apprentices, and 2 electrical apprentices, 76 of whom are attending, the remainder being either in their probationary period or having completed the school work.

In order to create incentives other than those mentioned, a number of prizes and scholarships have been established. The scholarships are awarded to the best two apprentices and carry with them an annual award of $600 to be spent in the pursuit of an engineering education at any recognized technical school. Two prizes are also awarded to each group per year. One, amounting to approximately $25 worth of tools, is given to the apprentice making the best record in his group and one amounting to approximately $10 worth of tools to the apprentice having made the greatest improvement in his group.

CHEMICAL LABORATORY

DO NOT USE GREASE ON SILENT CHAINS

Grease will not penetrate the joints of the chains, and hence will not lubricate the links properly, resulting in chain breakage and excessive wear. Silent chains have been known to wear out after several weeks service where grease had been used as a lubricant.

A heavy oil should be used for lubricating all chains used on the "Reading." It should be applied with a soft brush or by means of an oil cup that will furnish a constant dripping of oil on the inner surface of the chain. Always put the oil on the inside, or working side of the chain, when the machine is operating at slow speed. In oiling chains from the motor to the Disc Clutch or Handwheel Shaft it is advisable to saturate the chain with a light oil and then cover this with a heavy lubricant, such as 600-W. The light oil will penetrate the joints of the chain and furnish sufficient lubricant to the pins; while the heavy oil will prevent the light oil from being thrown off by centrifugal force.

All chains should be lubricated twice each week; more often if conditions are such that the oil does not remain on the chains for this length of time.

Adjustment of Chains

The chains should always be adjusted with such a tension that the slack side will sag about three-eighths of an inch from a straight line between the bottom edges of the sprockets. This adjustment is important if the maximum service is to be obtained from the chains.

The "READING" RECORD

VOL. 1 — FEBRUARY 1930 — NO. 2

Issued by
TEXTILE MACHINE WORKS, READING, PA.
Henry Janssen, *Pres.* F. Thun, *Sec'y and Treas.*

CONTENTS

	Page
"Accuracy First, Cost Second"	2
Shadow Cloth Attachment	2
The Wyomissing Trade School	4
Do Not Use Grease on Silent Chains	7
Changing Trend of Full-Fashioned Knitting Machine Gauges	8
Number of Full-Fashioned Stocking Mills in the United States	8

COPYRIGHT 1930

CHANGING TREND OF FULL-FASHIONED KNITTING MACHINE GAUGES

A glance at the accompanying chart will show that there has been a constant shifting in gauges during the past twenty-eight years; varying in intensity from time to time, but always toward finer gauges. The years of 1925 and 1926 were banner years for 42-gauge machines, practically 75% of the entire production of "Reading" Machines being of that gauge. However, sales for 1925 still showed a considerable number of 39 gauge machines. There was a decided change in 1927 and a gradual shifting of demand since that time in favor of finer gauges, particularly 45-gauge.

During 1929 less than one-tenth of one per cent of the entire output was 39-gauge, the number being so insignificant that it was eliminated from the statistics. The greater part of the demand was clearly for 45-gauge equipment.

It is our candid opinion, however, that 42-gauge will continue to be popular and that the demand for 45-gauge equipment will not increase in the same proportion that it has during the last few years.

CHART SHOWING THE SHIFTING OF FULL-FASHIONED KNITTING MACHINE GAUGES DURING THE PERIOD OF 1902-29

	33 gauge	36 gauge	39 gauge	42 gauge	45 gauge	48 gauge
1902-1917	6%	10%	75%	9%	..	..
1918	8%	8%	77%	10%	..	
1919	4%	7%	77%	14%	..	
1920	3%	6%	78%	13%	..	
1921	2%	5%	78%	15%	..	
1922	2%	3%	76%	19%	..	
1923	1%	3%	83%	12%	1%	..
1924	1%	3%	84%	11%	1%	..
1925	..	1%	21%	74%	4%	..
1926	..	2%	7%	73%	18%	..
1927	..	..	4%	67%	22%	7%
1928	..	..	2%	38%	28%	14%
1929	..	..	*	41%	33%	6%

*Less than one-tenth of one per cent.

NUMBER OF FULL-FASHIONED STOCKING MILLS IN THE UNITED STATES

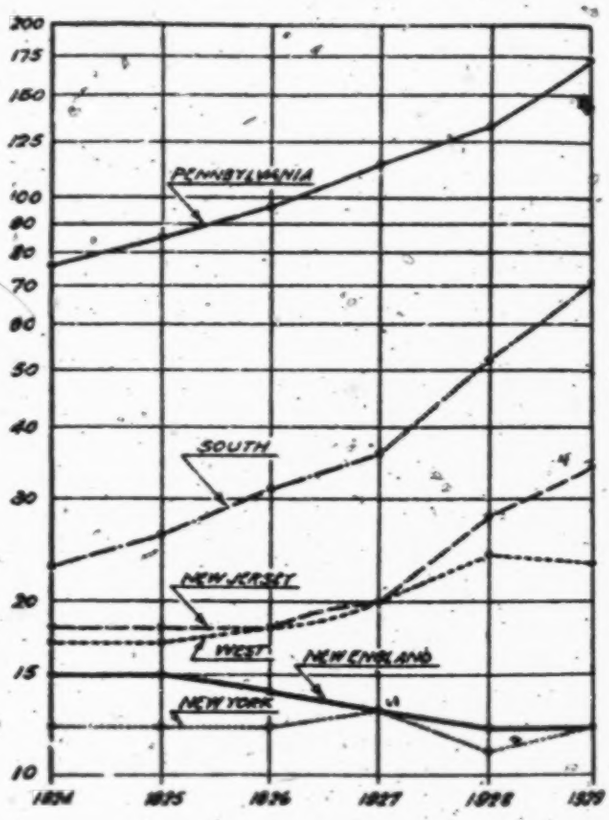

Contrary to general opinion, this chart shows that the development of the industry, as indicated by the number of new mills, is taking place in Pennsylvania and New Jersey at a ratio that is not very much el the increase in the South. In actual number of machines and number of mills, Pennsylvania, New Jersey, and the Western States are still leading. Considering the short period of time since the inception of the industry in the South, the rapid growth in this territory is undoubtedly remarkable.

It is perhaps not generally known that with the present productive capacity of not more than 25 million dozen pairs of full-fashioned stockings per year and with a potential consumption of 40 million dozen pairs there are only approximately 7.44 pairs for each consumer. A recent survey in New York City indicated that the well dressed city girl uses one pair of full-fashioned stockings each week; and a national survey discloses that approximately 5 pairs of full-fashioned and an equal amount of seamless stockings are consumed per person each year. These figures seem to indicate that with a sustained demand for stockings there is as yet no danger of overproduction.

PLAINTIFF'S EXHIBIT NO. 33 532

PLAINTIFF'S EXHIBIT No.

Plaintiff's Attachment

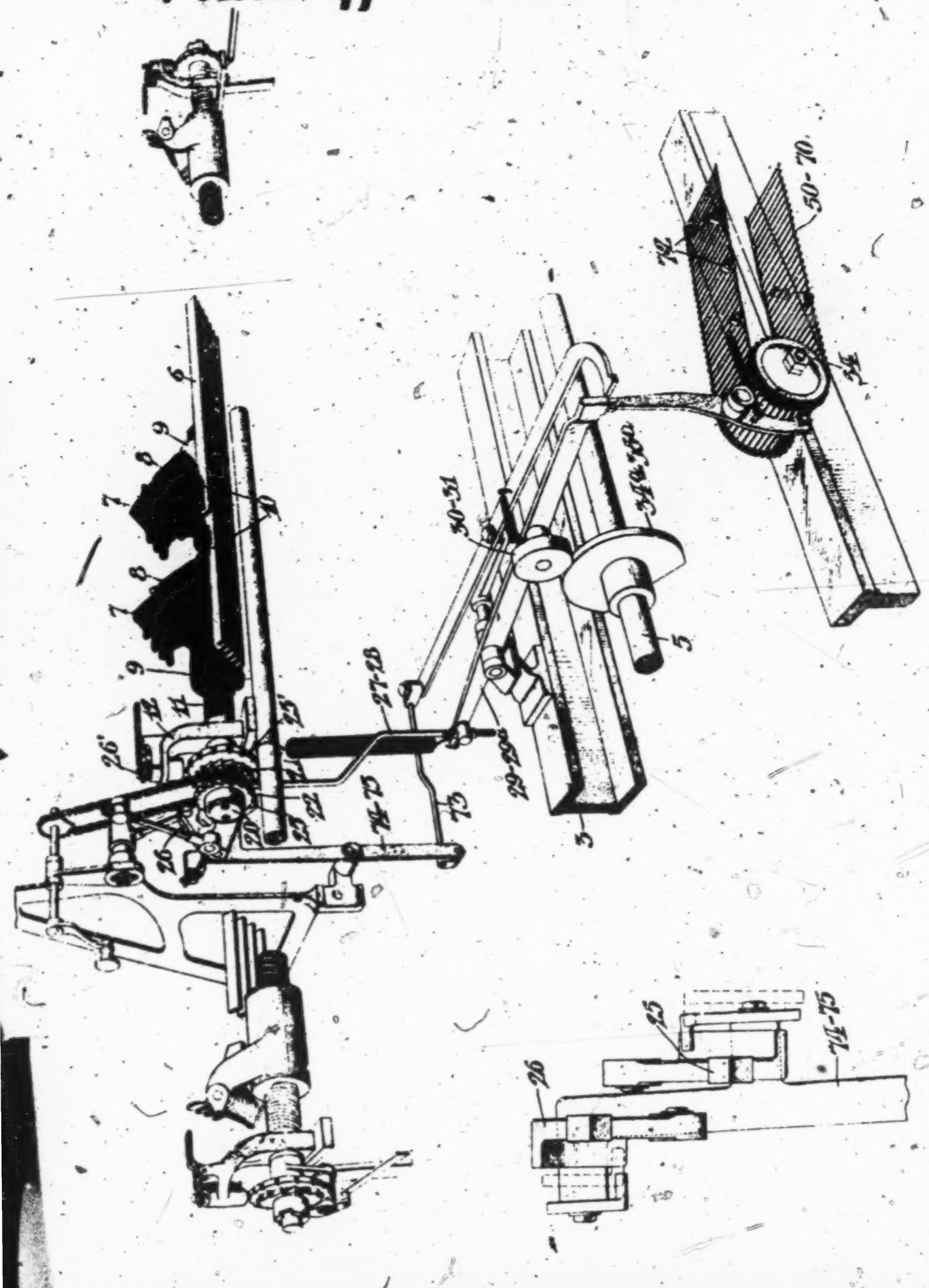

PLAINTIFF'S EXHIBIT No. 34 533 382

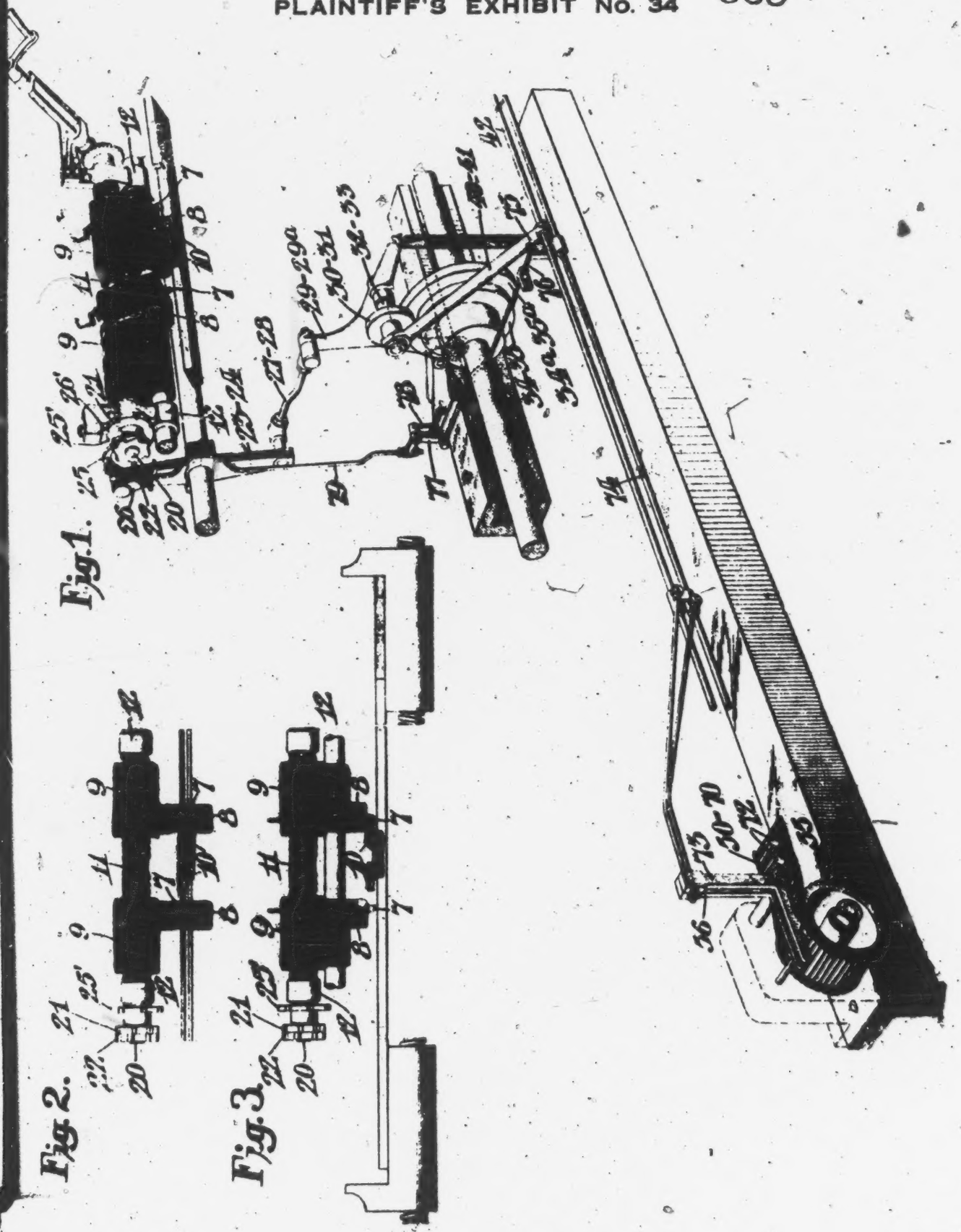

Fig. 1.

Fig. 2.

Fig. 3.

PLAINTIFF'S EXHIBIT No.

Defendant's Attachment

PLAINTIFF'S EXHIBIT No. 35

383
534

PLAINTIFF'S EXHIBIT No.

Attachment on Hofmann Fleetwood Footer No 116811

Page Tightly Bound

[fol. 535] PLAINTIFF'S EXHIBIT No. 36

Number of Schletter Attachments Sold Per Month According to Sales Orders and those Shipped on Machines

1927:

Month	Sales Orders	Machines	Total	Grand Total
August	2	0	2	2
September	0	2	2	4
October	39	14	53	57
November	70	6	76	133
December	62	13	75	208
1928:				
January	86	7	93	301
February	111	7	118	419
March	120	9	129	548
April	115	10	125	673
May	111	5	116	789
June	75	15	90	879
July	52	34	86	965
August	42	66	108	1073
September	46	42	88	1161
October	51	53	104	1265
November	61	51	112	1377
December	56	43	99	1476
1929:				
January	49	48	97	1573
February	84	38	122	1695
March	75	45	110	1805
April	50	64	114	1919
May	68	74	142	2061
June	79	75	154	2215
July	45	71	116	2331
[fol. 536] August	46	111	157	2488
September	89	90	179	2667
October	52	119	171	2838
November	54	122	176	3014
December	59	110	169	3183

Plaintiff's Exhibit No. 36—Continued

1930:

Month	Sales Orders	Machines	Total	Grand Total
January	~~103~~	~~114~~	~~217~~	~~3400~~
February	181	84	265	3665
March	176	75	231	3896
April	186	64	250	4146
May	106	37	143	4289
June	112	30	142	4431
July	107	28	135	4566
August	61	26	87	4653
September	60	31	91	4744
October	53	31	84	4828
November	128	30	158	4986
December	139	28	167	5153
1931:				
January	94	37	131	5284
February	59	26	85	5369
March	79	24	103	5472
April	58	28	86	5558
May	43	34	77	5635
June	28	35	63	5698
July	37	25	62	5760
August	16	30	46	5806
September	20	20	40	5846
October	27	24	51	5897
November	31	28	59	5956
December	10	24	34	5990
1932:				
January	4	26	30	6020
February	4	17	21	6041
[fol. 537] March	8	14	22	6063
April	5	9	14	6077
May	8	8	16	6093
June	6	5	11	6104
July	12	2	14	6118
August	12	2	14	6132
September	12	8	20	6152
October	10	4	14	6166
November	5	13	18	6184
December	23	14	37	6221

Plaintiff's Exhibit No. 36—Continued

1933:

Month	Sales Orders	Machines	Total	Grand Total
January	11	2	13	6234
February	7	2	9	6243
March	5	6	11	6254
April	2	7	9	6263
May	10	3	13	6276
June	3	26	29	6305
July	11	32	43	6348
August	13	29	42	6390
September	10	32	42	6432
October	19	36	55	6487
November	6	35	41	6528
December	7	23	30	6558
1934:				
January	1	14	15	6573
February	3	34	37	6610
March	3	16	19	6629
April	6	9	15	6644
May	4	14	18	6662
June	7	11	18	6680
July	16	2	18	6698
August	8	3	11	6709
September	3	13	16	6725
October	9	18	27	6752
November	9	15	24	6776
December	7	7	14	6790

[fol. 538] PLAINTIFF'S EXHIBIT No. 37

License Agreement

Made and concluded this eighteenth day of September, A. D. 1930, between Textile Machine Works, a corporation created and existing under the laws of the State of Pennsylvania, having its principal office at Wyomissing, Berks County, Pennsylvania, hereinafter designated the Licensor,

and

The Grosser Knitting Machine Co., a firm composed of Robert Winkler and Max Nydegger and having its prin-

cipal office at New York City, State of New York, hereinafter designated Licensee; which firm imports knitting machines and parts manufactured by the firm of G. Hilscher, of Chemnitz, Germany, and is attorney in fact for the said G. Hilscher Co.,

Witnesseth:

Whereas, Letters Patent of the United States Nos. 1,713,628 and 1,752,206 for Attachments for Flat Knitting Machines were granted to Richard E. Schletter May 21, 1929, and March 25, 1930 respectively, and were subsequently assigned to the Licensor under date of December 20, 1929, as duly recorded in the United States Patent Office, Liber C 142 page 74, and

Whereas, the Licensee is desirous of obtaining a license, non-exclusive, non-assignable, to import, manufacture and sell throughout the United States of America and the terri- [fol. 539] tories thereof, knitting machine attachments embodying and employing the inventions of the aforesaid Patents.

Now, Therefore, the Parties Have Agreed as Follows:

1. Subject to the due performance of all the terms, covenants, and conditions of this agreement on the part of the Licensee agreed to be performed hereunder, the Licensor has given and granted, and by these presents does give and grant unto the Licensee, upon the terms and conditions and with the limitations herein set forth, for the remainder of the term of the aforesaid United States Patents, a non-exclusive and non-assignable right to import, manufacture and sell, throughout the United States of America and its territorial possessions, knitting machine attachments embodying and employing the inventions set forth and claimed by claims one to eight and fourteen to eighteen inclusive of the aforesaid Patent No. 1,713,628, and all the claims of Patent No. 1,752,206, unless this agreement is sooner terminated as herein provided. Accordingly, the Licensee will be free to import, make and sell knitting machine attachments as covered by the recited claims of said Patents, and incorporating mechanism for producing a split seam in knitted fabric as shown by the sample attached at the end of this agreement and marked Exhibit A; but will not be at liberty to make such attachments incorporating mechanism covered by claims nine to

thirteen, and nineteen to twenty-three inclusive, of Patent No. 1,713,628, for producing a split seam in knitted fabrics [fol. 540] as illustrated by the sample attached at the end of this agreement and marked Exhibit B.

2. The Licensee agrees to pay to the Licensor, as a license fee, seventy-five dollars ($75) upon each attachment in accordance with the recited claims, sold in the United States by the Licensee, subsequent to May 21, 1929, or previously sold, and since then in use.

3. The Licensee, within fifteen (15) days after the first days of January, April, July, and October, in each and every year, during the continuance of this agreement, agrees to furnish to the Licensor written statements, under oath, specifying the total number of attachments embodying and containing the said inventions sold by the Licensee during the preceding quarter, such statements to be accompanied by a check in payment of the royalty for the period covered thereby. The first statement shall be rendered not later than the fifteenth day of October, 1930, and shall cover the attachments embodying the inventions, sold by the Licensee, or in use by its customers, since May 21, 1929, and to October 1, 1930.

4. The Licensee agrees to mark all attachments put out under this license as follows: Patents No. 1,713,628—1,752,206.

5. The Licensee admits the validity of said Patents Nos. 1,713,628 and 1,752,206, and agrees not to dispute the validity thereof or the title of the Licensor thereto, and further agrees that it will not contest the same directly or indirectly, [fol. 541] in any way whatsoever, or aid others in doing so.

6. If the Licensee shall at any time make default in the payment of any royalty or the making of any report hereunder or shall commit any breach of any covenant or agreement herein contained, or shall make false report and shall fail to remedy any such fault or breach within fifteen days after written notice thereto by the Licensor, the Licensor may, at its option, cancel this agreement and revoke the license herein granted by a notice in writing to such effect, and such act shall not prejudice the right of the Licensor to recover any royalties or other sums due at the time of

such cancellation and shall not prejudice any cause of action or claim of the Licensor accrued or to accrue, on account of any breach or default made by the Licensee.

7. The Licensee agrees to keep full, accurate and complete books of account, records, data or memoranda respecting the said business, and showing the number of attachments imported, manufactured and sold under the license herein granted in sufficient detail to enable the royalties payable hereunder by the Licensee to be determined, and further agrees to and does hereby give to a certified public accountant or accountants of the State of New York designated by the Licensor, the privilege of examining its said books and records at all reasonable times and from time to time for the purpose of verifying the reports provided for in article No. 3 hereto. The said accountant may communicate to the Licensor the result of its investigation, [fol. 542] and except as hereinafter provided, said accountant shall not copy customers names of the Licensee, however, in any instance or instances, where the Licensor is desirous of checking the sales to a particular customer or customers of the Licensee, for the purpose of verifying the Licensee's report, the accountant may copy the name or names of the particular customer or customers, and communicate the details thereof to the Licensor.

8. If the Licensee shall become insolvent, or shall make an assignment for the benefit of creditors, or proceedings in voluntary or involuntary bankruptcy shall be instituted in behalf of or against the Licensee, or a receiver or trustee of the Licensee's property shall be appointed, the license herein granted shall terminate forthwith, but the Licensor shall recover royalties on imported, manufactured and unsold attachments, and in case of any such termination, the right, title or interest in and to the license covered by this agreement shall then and thereby forthwith revert to and become vested in the Licensor.

9. Any notice which the Licensor may serve under this agreement may be served by enclosing the same in a post paid wrapper, addressed to the Licensee, or its receiver or trustee in bankruptcy, at its or their last known address, and depositing the same by registered mail in any Post Office.

10. The Licensor shall have the sole and exclusive right to institute and prosecute any and all suits and enjoin any and all infringement of said Patents; and from time to time [fol. 543] during the continuance of this agreement, may institute any suit or suits which it may deem necessary; the Licensor will have the sole right to institute and prosecute such suits, and to employ therefor its own counsel, and it shall pay for the services rendered by counsel so retained, and all costs and expenses incidental thereto.

11. It is understood and agreed that if any suit or suits be brought against the Licensee for infringement of a patent covering the inventions set forth by claims one to eight and fourteen to eighteen inclusive of Letters Patent No. 1,713,628, or all the claims of Patent No. 1,752,206, that the Licensor will prosecute such suit or suits in defense of the Licensee, employing therefor its own counsel, and it shall pay for the services rendered by counsel so retained, and all costs and expenses incidental to such suit or suits.

12. It is to be understood that the Licensor assumes no responsibility whatsoever for any law suit or suits brought against the Licensee or its customers for infringement of any design or other patent which covers the product produced by the attachments of this agreement.

13. This agreement shall be binding upon and enure to the benefit of the successors or assigns of the Licensor; also, it shall be binding upon and enure to the benefit of the successors of the entire business of the Licensee, but the Licensee may not assign the same.

IN WITNESS WHEREOF, the parties hereto have caused these presents to be signed and sealed, the day and year first above written.

TEXTILE MACHINE WORKS

BY: Henry Janssen

ATTEST:

President, Licensor

Secretary

GROSSER KNITTING MACHINE CO.
Acting also as attorney in fact for G. Hilscher

BY:

ATTEST:

Secretary

EXHIBIT A

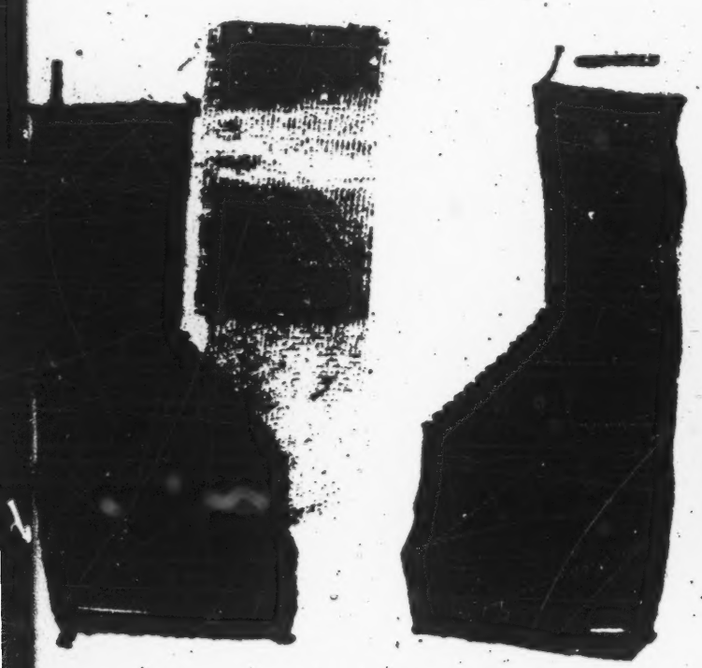

EXHIBIT D

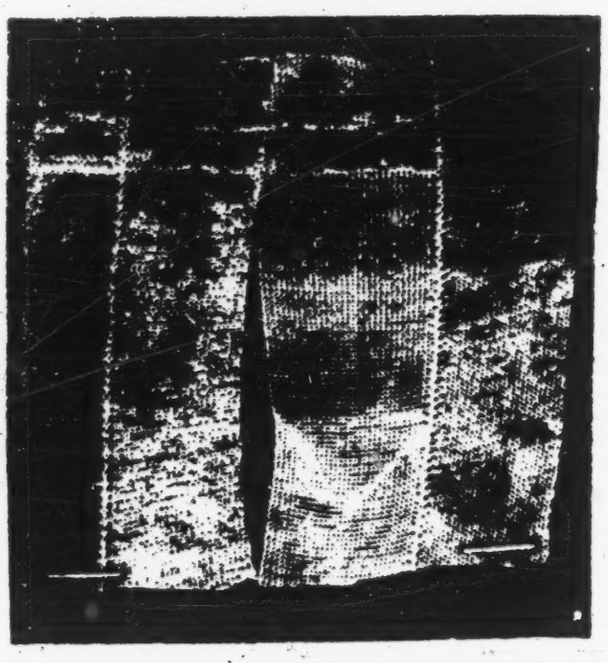

[fols. 545-551] PLAINTIFF'S EXHIBIT No. 39

March 31, 1925. 1,531,349

R. E. SCHLETTER

FULL FASHIONED CLOCKED HOSIERY AND METHOD OF MAKING SAME

Filed Jan. 6, 1923 3 Sheets-Sheet 1

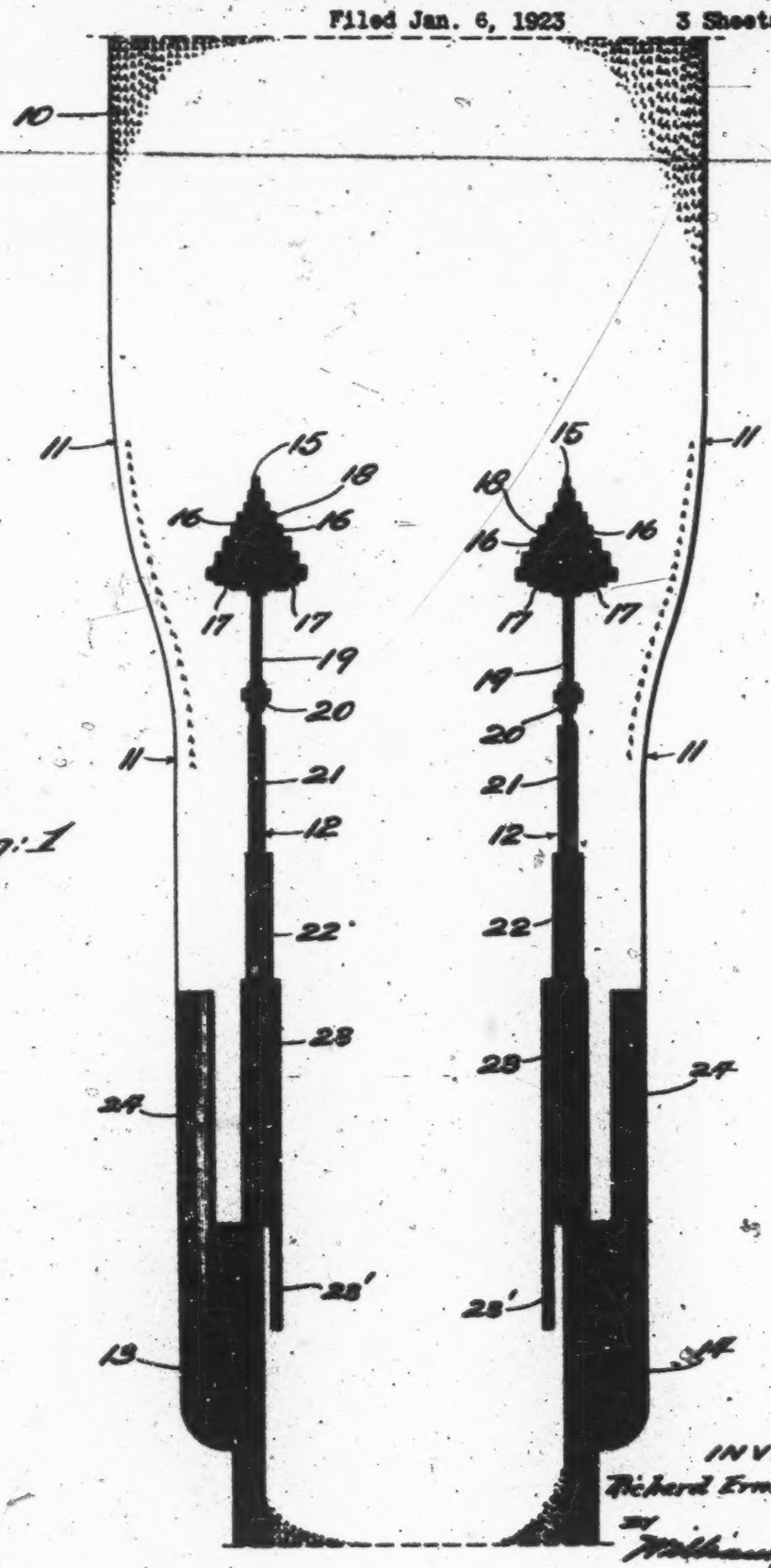

Fig: 1

INVENTOR
Richard Ernst Schletter
BY William J. Jackson
ATTORNEY

395

March 31, 1925. 1,531,349

R. E. SCHLETTER

FULL FASHIONED CLOCKED HOSIERY AND METHOD OF MAKING SAME

Filed Jan. 6, 1923 3 Sheets-Sheet 2

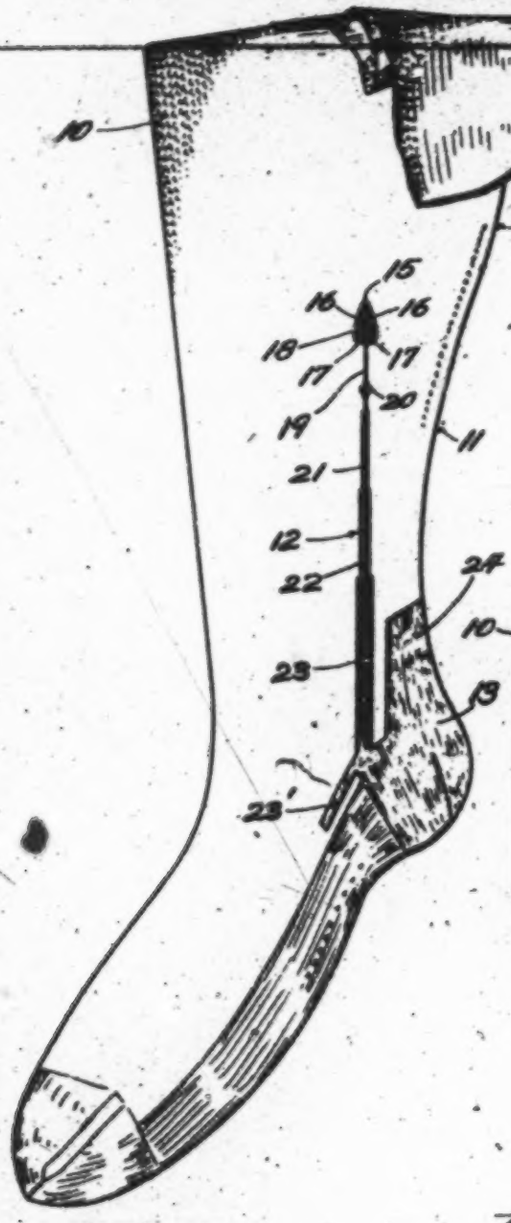

Fig. 2

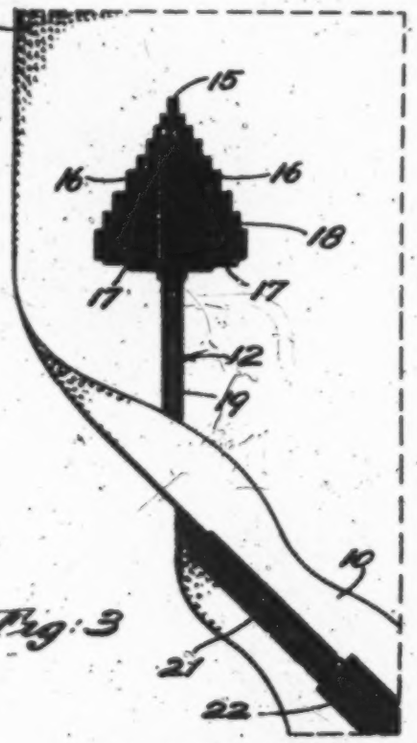

Fig. 3

INVENTOR.
Richard Ernst Schletter.
BY William J. Clarke
ATTORNEY.

396

March 31, 1925. 1,531,349

R. E. SCHLETTER

FULL FASHIONED CLOCKED HOSIERY AND METHOD OF MAKING SAME

Filed Jan. 6, 1923 3 Sheets-Sheet 3

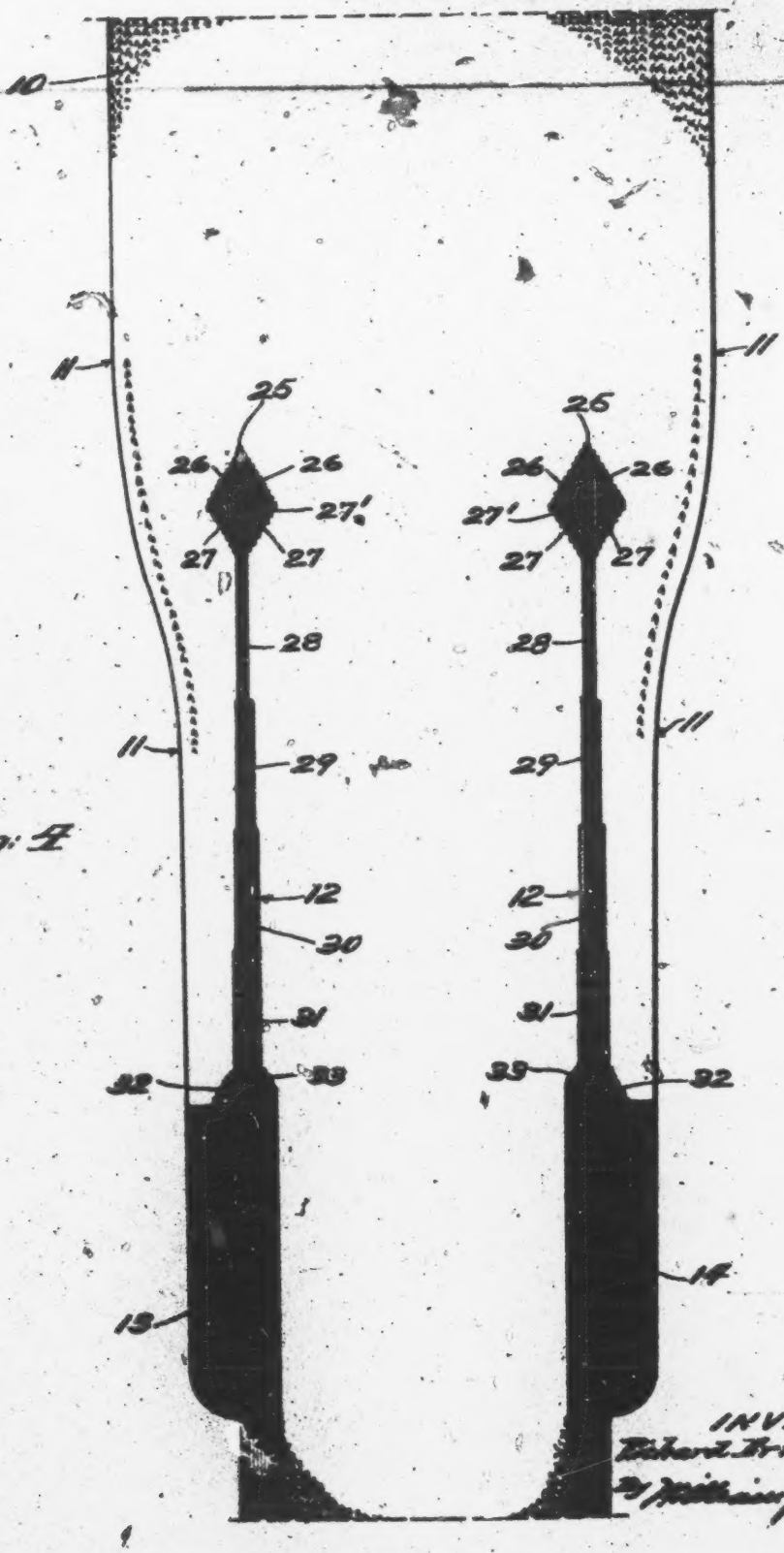

Fig. 1

INVENTOR.
Richard Ernst Schletter.
By William J. Jackson
ATTORNEY.

Patented Mar. 31, 1925. 1,531,349

UNITED STATES PATENT OFFICE.

RICHARD ERNST SCHLEITER, OF PHILADELPHIA, PENNSYLVANIA.

FULL-FASHIONED CLOCKED HOSIERY AND METHOD OF MAKING SAME.

Application filed January 4, 1922. Serial No. 527,158.

To all whom it may concern:

Be it known that I, RICHARD ERNST SCHLEITER, a citizen of the Republic of Germany (naturalization papers applied for), residing at the city of Philadelphia, county of Philadelphia, and State of Pennsylvania, have invented certain new and useful Improved Full-Fashioned Clocked Hosiery and Methods of Making Same, of which the following is a specification.

This invention, generally stated, has relation to hosiery of full fashioned type and has more particular relation to fashioning clocks thereon.

Commercially considered, two types of clocked hosiery are in use. In one type clocks are of open work, termed clock-lace, and stockings of this type being relatively fragile are not suited for all occasions or every-day use and furthermore are comparatively expensive. The other type comprises hosiery in which clocks are embroidered thereon. While this type is best suited for every-day use practice dictates, that the action of needles laying-on the embroidery yarn serves to so weaken the stocking-web as to have a deleterious effect thereon. The embroidering operation also serves to increase manufacturing costs.

The leading object of the present invention is to overcome the above described, disadvantageous features and provide full fashioned hosiery with clocks knitted in with the stocking-web by means of re-inforcing thread, whereby, not only is the stocking-web adjacent said clocks strengthened and the cost of production reduced, thus providing hosiery suitable for every-day use, but, in addition, hosiery is provided possessed of unique, structural characteristics presenting an ornamental and distinctive appearance, rendering such hosiery suitable for wear upon special occasions also. A further object of the present invention is to provide fine, chiffon silk hosiery with clocks in such manner, that, while the ankle portion thereof is re-inforced by such clocks the latter are not detrimental to the appearance of the stocking, but, upon the contrary enhance its appearance. A still further object of the present invention is to knit into the ankle portion of a stocking-web, simultaneously with the formation of clocks, re-inforcing thread in alignment with the heel-parts but spaced from the clocks whereby a re-inforced, rear ankle portion is provided above the heel of a stocking.

With these and other objects in view, the invention consists of the improvements hereinafter described and finally claimed.

The nature, characteristic features and scope of the invention will be more fully understood from the following description, taken in connection with the accompanying drawings forming part hereof, and in which:—

Fig. 1, is a fragmentary view of a stocking-web fabricated in accordance with the present invention.

Fig. 2, is a view in side elevation of a completed stocking.

Fig. 3, is a fragmentary view of a stocking-web exposing both sides of a clock, and

Fig. 4, is a fragmentary view of another form of stocking-web fabricated in accordance with the present invention.

For the purpose of illustrating my invention I have shown in the accompanying drawings two forms thereof which are at present preferred by me, since the same have been found in practice to give satisfactory and reliable results, although it is to be understood that the various instrumentalities of which my invention consists can be variously arranged and organized and that my invention is not limited to the precise arrangement and organization of the instrumentalities as herein shown and described.

The web of hosiery embodying features of the present invention is knit upon a straight knitting machine equipped with mechanism capable of co-acting with respect to the web-forming needles to provide re-inforcements having zig-zag-like lines inclined to the wales and courses of the web. An example of such stocking re-inforcement is disclosed in Letters Patent granted to me under date of September 19, 1916, and numbered 1,198,482. In manufacture, the stocking-web, which has selvage edges, is knit in a well understood manner to that portion of the leg at which the narrowing operation takes place. In the drawings the stocking-web is designated 10 and the narrowing leg portion is designated 11—11. At or about the time narrowing of the leg portion is commenced, additional or re-inforcing thread is presented to certain of the web-forming needles to effect formation of a clock or clocks 12. During formation

of a clock or clocks it is to be understood, that, fabrication of the stocking-web, including the re-inforced heel portions 13—14, takes place in the usual and well understood manner of making full fashioned hosiery. The additional or re-inforcing thread is supplied to the web-forming needles so that zig-zag-like lines inclined to the wales and courses of the web are produced to effect the contour of a clock or clocks. Obviously, depending upon the contour of a clock or clocks desired, the feeding of additional thread varies. It is to be understood also, that, the clock or clocks may extend above or below the parts 11—11 of the web. In practice I commence the formation of the clock or clocks midway of the narrowing portion of the web. Obviously but one clock may be formed upon a stocking-web if desired, although in practice two are provided. As the steps of formation of two clocks are mere duplication the following description, for illustrative purposes, will be restricted to the fabrication of single clocked stocking-web.

Referring now more particularly to the form shown in Figs. 1, 2 and 3, a description of the method of formation will now be given. At or about the time the narrowing of the stocking-web 10 takes place one or more of the web-forming needles are provided with additional or re-inforcing thread to form the top 15 of a clock. At predetermined intervals, thereafter, additional needles have fed thereto said thread to provide a re-inforced portion of gradually increasing width the outline or contour of which is comprised of zig-zag-like lines 16—16. The re-inforcing thread at predetermined intervals is now withheld from the stocking-web forming needles to form the lines 17—17 thus completing a conventional, leaf-like figure 18. From the bottom of this figure 18 there is extended downwardly, in a vertical manner, a portion 19 formed by one or more web-forming needles knitting re-enforcing thread into the web 10. At a predetermined place said portion 19 may have added thereto a small design, as a cross 20, formed by supplying, at predetermined intervals, additional needles with re-inforcing thread and then withholding said thread at similar intervals. Upon completion of portion 19, additional needles are provided with re-inforcing thread to provide widened part 21. At a predetermined place part 21 is also widened to provide part 22 which latter part, in turn, is widened at a predetermined place to provide part 23 which extends down to a heel part. The combined parts 18, 21, 22 and 23 form a vertical, stem-like figure gradually increasing in width upon each side of a medial line extending vertically therethrough. The outline or contour of such stem-like figure is formed by zig-zag-like lines although not as pronounced as in the leaf-shaped figure. At or about the time that the formation of part 23 is commenced a group of web-forming needles spaced from those forming a clock, are provided with re-inforcing thread and knit into the web, simultaneously with the formation of the balance of part 23, a re-inforced part 24 which extends laterally from a selvage edge of the stocking-web toward a clock. The part 24 is at the rear of the ankle, is above the heel and in alignment therewith and is spaced from a clock. This part 24 is positioned to resist wear at or near the heel in the rear thereof. This provides a useful adjunct to a stocking, is not detrimental to its appearance because it blends with the particular type of clocks employed and is inexpensive in that it may be fabricated simultaneously with a clock. Upon completion of part 23 of the clock and the part 24 at the stocking rear, the clock is finished by withholding re-inforcing thread from certain of the needles and permitting others to knit re-inforcing thread in a direction toward the stocking toe for a pre-determined distance as indicated at 23'. This part is spaced from the re-inforced foot portion and forms a finish for the lower portion of a clock. Simultaneously with the formation of part 23', certain of the needles which have formed clock part 23 and heel part 24 and those needles forming the part there-between are supplied with re-inforcing thread to effect formation of a conventional re-inforced heel part. A conventional foot is then attached to the stocking-web in the usual manner.

A description will now be given of the formation of a stocking-web as disclosed in Fig. 4. At or about the time the narrowing of the stocking-web takes place one or more of the web-forming needles are provided with additional or re-inforcing thread to form the top 25 of a clock. At predetermined intervals, thereafter, additional needles have fed thereto said thread thus providing a re-inforced portion of gradually increasing width the outline or contour of which is comprised of zig-zag-like lines 26—26. The re-inforcing thread, at predetermined intervals, is now held free of certain of the web-forming needles thus providing a re-inforced portion of gradually decreasing width, the outline or contour of which is comprised of zig-zag-like lines 27—27. Thus a relatively diamond-shaped figure 27' is produced. From the bottom of this figure 27' there is extended downwardly, in a vertical manner, a portion 28 formed by one or more web-forming needles being supplied with re-inforcing thread. At a predetermined place such part 28 may be widened as at 29 by supplying additional needles, at least one upon each side of the

group which has formed part 32, with re-inforcing thread. At a predetermined place part 29 may be also widened for a machine similar to that above described, to form part 33. This part 29 may in turn, at a predetermined place, be also widened for a desired distance to form part 31. The combined parts 29 to 31 inclusive form a vertical, stem-like figure gradually decreasing in width upon each side of a medial line extending vertically therethrough. The outline or contour of such stem-like figure is formed by zig-zag-like lines although not as pronounced as in the diamond shaped figure 27. The stem-like portion above described is now appreciably widened along zig-zag-like lines 32—33 by supplying additional web-forming needles with the re-inforcing thread. The above described, re-inforced part forms a clock spaced from the selvage edge of the web. The zig-zag like line 32 is carried further down the ankle-portion of the web than is the line 33 and at a predetermined place all of the web-forming needles between a selvage edge and a clock are supplied with additional thread to provide a re-inforced heel part. The stocking is now finished in the usual manner it being understood that the heel re-inforcement is a continuation of the clock as fabricated.

The above described methods of fabrication provide neat, attractive and comparatively inexpensive hosiery. Further fine chiffon silk may be employed because the clocks, being formed simultaneously with and knitted directly into the stocking-web, act as re-inforced parts and provide for stability. A clocked stocking-web as above described and formed, is a reversible fabric, the clocks appearing upon opposite faces of a web as clearly shown in Fig. 3. While the above description and drawings have been restricted to two designs of clocks, for illustrative purposes, it will be understood that varied styles of clocks may be effected by providing various combinations of web-forming needles with additional or re-inforcing thread.

Clocked hosiery as above described may be fashioned from silk or other thread, for instance white silk, and then "dipped" for instance in black dye to provide a stocking in which the web and clock are of the same color. In case it is desired to have a stocking-web and clock of contrasting colors the same may be accomplished either according to "dipping" procedure or to "ingrain" system of formation. In the former case, assuming for the purpose of illustration that a green clock is desired upon a black stocking, the web is knit from undyed silk or other thread as usual, but, the re-inforcing thread, as introduced to form a clock, has been colored green with specially prepared dye to resist accepting dye of any other color. Thus when the completed stocking-web is treated with black dye, the green thread from the needles that knit the clock retains its original color, the rest of the stocking-web and the thread which knits the heel and toe portions being dyed black. Instead of using green thread for the clock and black thread for the stocking-web, any other contrasting colors may be employed. For example, if it is desired to have a white stocking-web with a colored clock obviously it is only necessary to dye the re-inforcing thread previous to introduction to the web-forming needles.

In practice a flat knitting machine is provided with an attachment for operating at predetermined intervals those thread carriers upon the machine which supply the web-forming needles with re-inforcing thread.

It will now be apparent that I have devised novel and useful constructions which embody the features of advantage enumerated as desirable in the statement of the invention and the above description, and while I have in the present instance shown and described the preferred embodiments thereof which have been found in practice to give satisfactory and reliable results, it is to be understood that the same are susceptible of modification in various particulars without departing from the spirit or scope of the invention or sacrificing any of its advantages.

What I claim is:—

1. The herein described method of manufacturing full fashioned clocked hosiery which consists in knitting directly into the stocking-web in spaced relation from the opposite edges thereof; and simultaneously with formation of said stocking web re-inforcing thread in successive clock-forming courses, said courses defining zig-zag-like lines substantially inclined to the wales and courses of said web and continuing knitting of re-inforcing thread to form re-inforced heel-portions which are continuations in part of said clocks.

2. The herein described method of manufacturing full fashioned clocked hosiery which consists in knitting a stocking-web until the usual narrowing operation takes place, substantially at which time re-inforcing thread is provided selected web-forming needles spaced from the opposite edges of the web for introducing the re-inforcing thread into the web in successive clock forming courses, the opposed ends of the courses defining zig-zag-like lines substantially inclined to the wales and courses of said web, which operation continues until the heel portion of the web is reached at which time re-inforcing thread is provided additional needles to form re-inforced heel-portions

which are continuations in part of said clocks.

3. The herein described method of manufacturing full fashioned clocked hosiery which consists in knitting directly into the stocking-web in spaced relation from the opposite edges thereof; and simultaneously with formation of said stocking-web, re-inforcing thread in successive clock-forming courses, the opposed ends of said courses defining zig-zag-like lines substantially inclined to the wales and courses of said web and before clock completion simultaneously forming in conjunction therewith re-inforced rear ankle portions spaced from the clocks and thereafter forming a re-inforced heel the same being a continuation in part of said clocks and re-inforced ankle parts.

4. As a new article of manufacture a full fashioned clocked stocking, the opposed clocks being formed of successive courses of re-inforcing thread knitted directly into the stocking-web in spaced relation from the stocking rear seam; and simultaneously with formation of said stocking-web, the opposed ends of which courses define zig-zag-like lines substantially inclined to the wales and courses of said web, said stocking having re-inforced heel portions which are continuations in part of said clocks.

5. As a new article of manufacture a full fashioned clocked stocking, the opposed clocks being formed of successive courses of re-inforcing thread knitted directly into the stocking-web in spaced relation from the stocking rear seam; and simultaneously with formation of said stocking-web the opposed ends of which courses define a zig-zag-like line substantially inclined to the wales and courses of said web said stocking having re-inforced rear ankle portions spaced from the clocks, said stocking having re-inforced heel portions which are continuations in part of said clocks and re-inforced ankle parts.

In testimony whereof, I have hereunto signed my name.

RICHARD ERNST SCHLETTER.

PLAINTIFF'S EXHIBIT No. 48 552

PLAINTIFF'S EXHIBIT NO.

BLANK WITH 2 SHADOW CLOCKS & HEELSTEPS

OESTERREICH

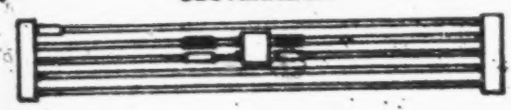

SCHLETTER

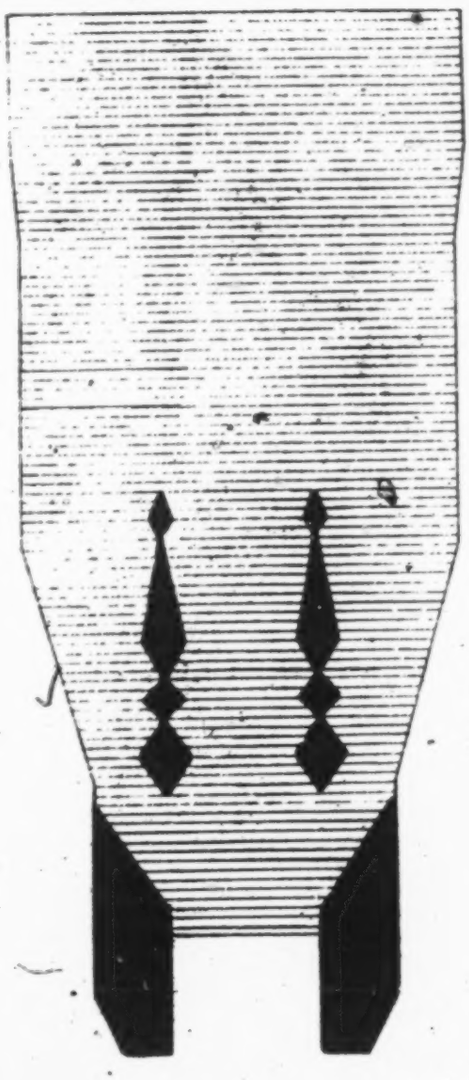

554

PLAINTIFF'S EXHIBIT No. 50

PLAINTIFF'S EXHIBIT NO.

BLANK WITH 1 INSERT, 1 SHADOW CLOCK & HEELSTEPS

OESTERREICH

SCHLETTER

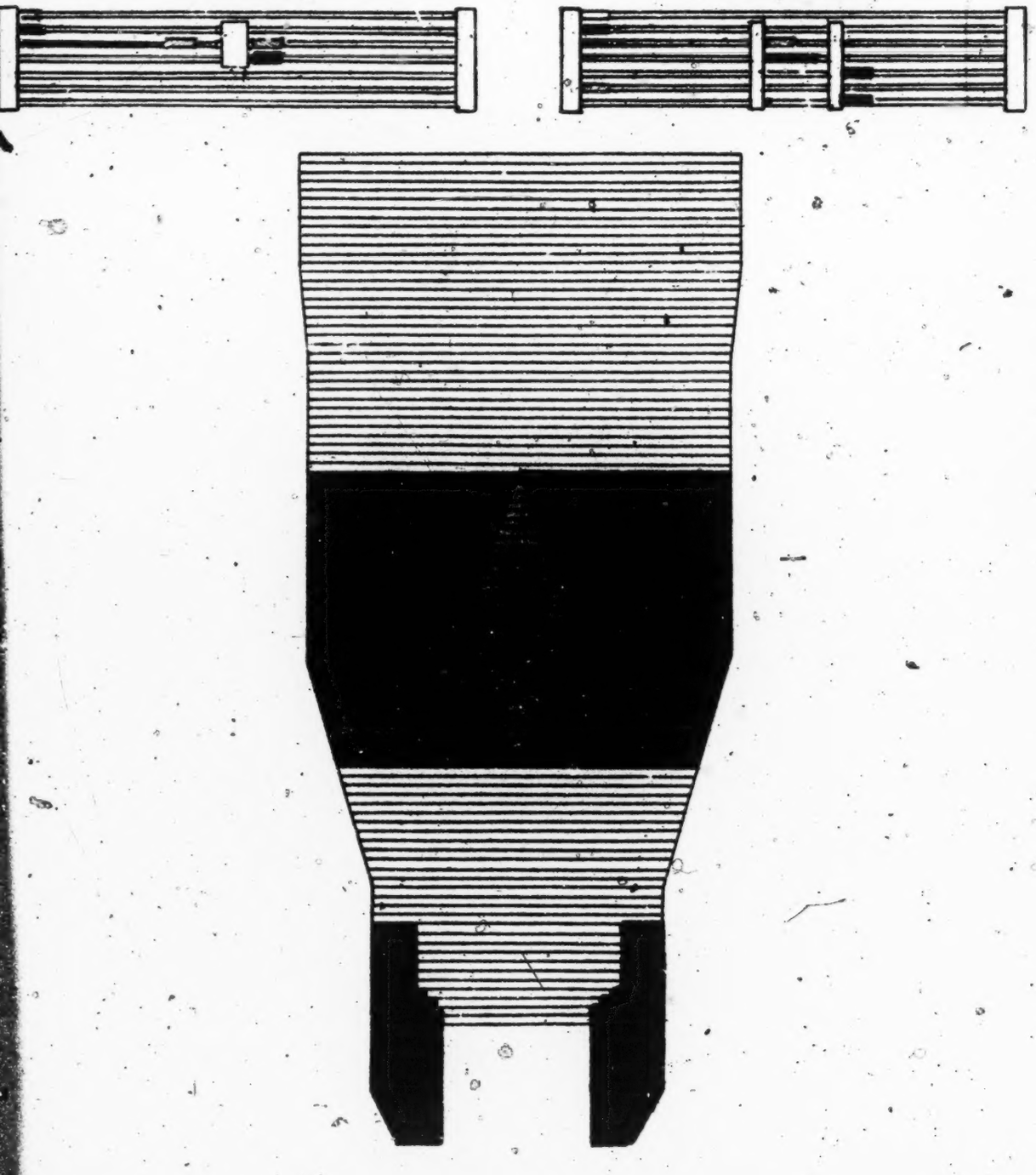

PLAINTIFF'S EXHIBIT NO. 52 555

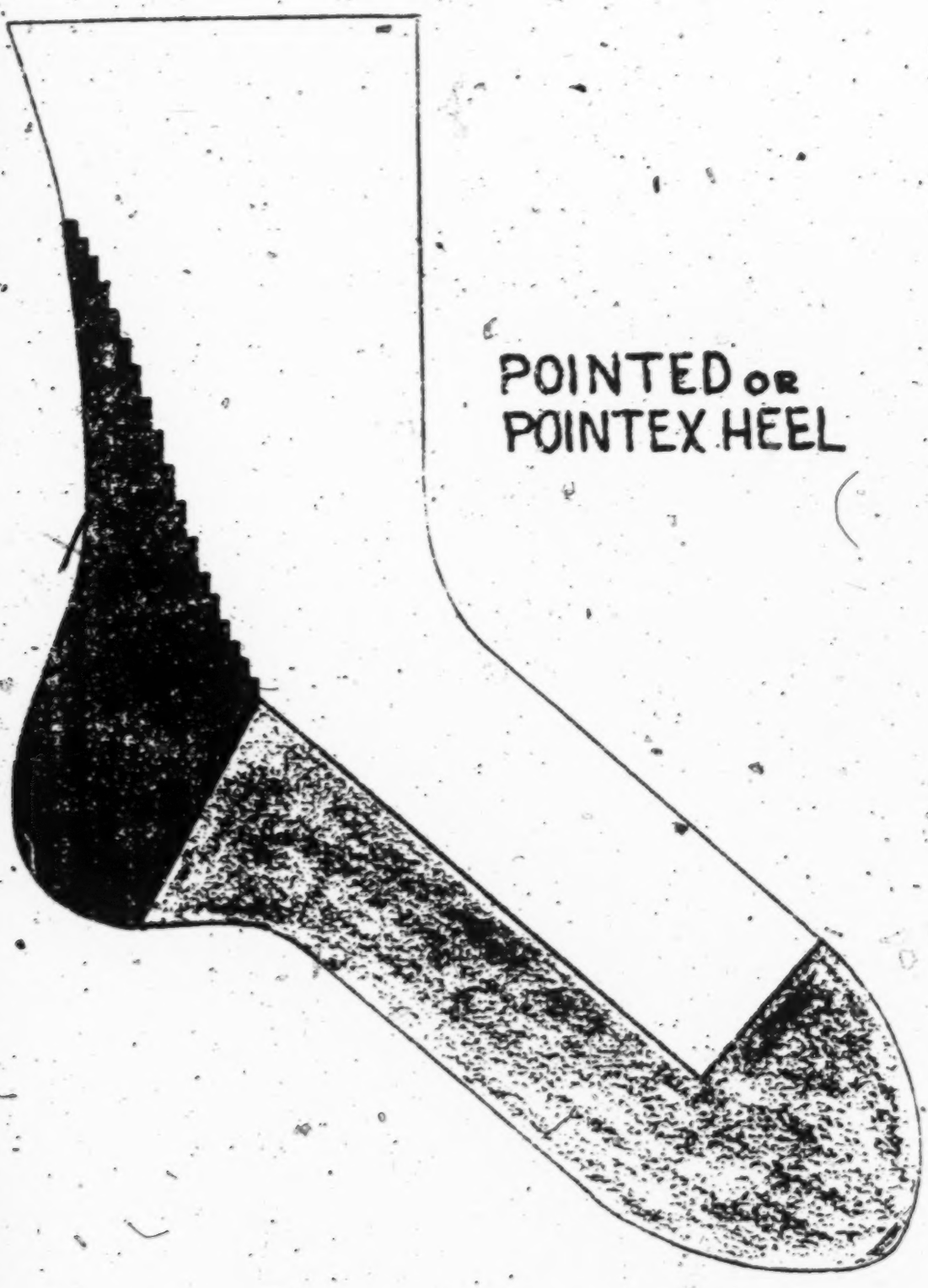

[fols. 556-557] PLAINTIFF'S EXHIBIT No. 53.

2 Needle Closed Split Attachment as sold by: Textile Machine Works, Reading, Penna.

Sold with new Machines combined with Reinforced Selvedge Attachment	1931	17	
	1932	29	
	1933	65	
	1934	39	
	1935	29	
			179
Sold as per Sales Orders combined with Reinforced Selvedge Attachment	1931	127	
	1932	61	
	1933	46	
	1934	10	
	1935	9	
			253
Sold as per Sales Orders for old machines equipped with Reinforced Selv. Att.	1931	99	
	1932	8	
	1933	0	
	1934	3	
			110
Total			542

Oct. 11th. 1935.
GB/Bo.

[fols. 558-562] PLAINTIFF'S EXHIBIT NO. 54

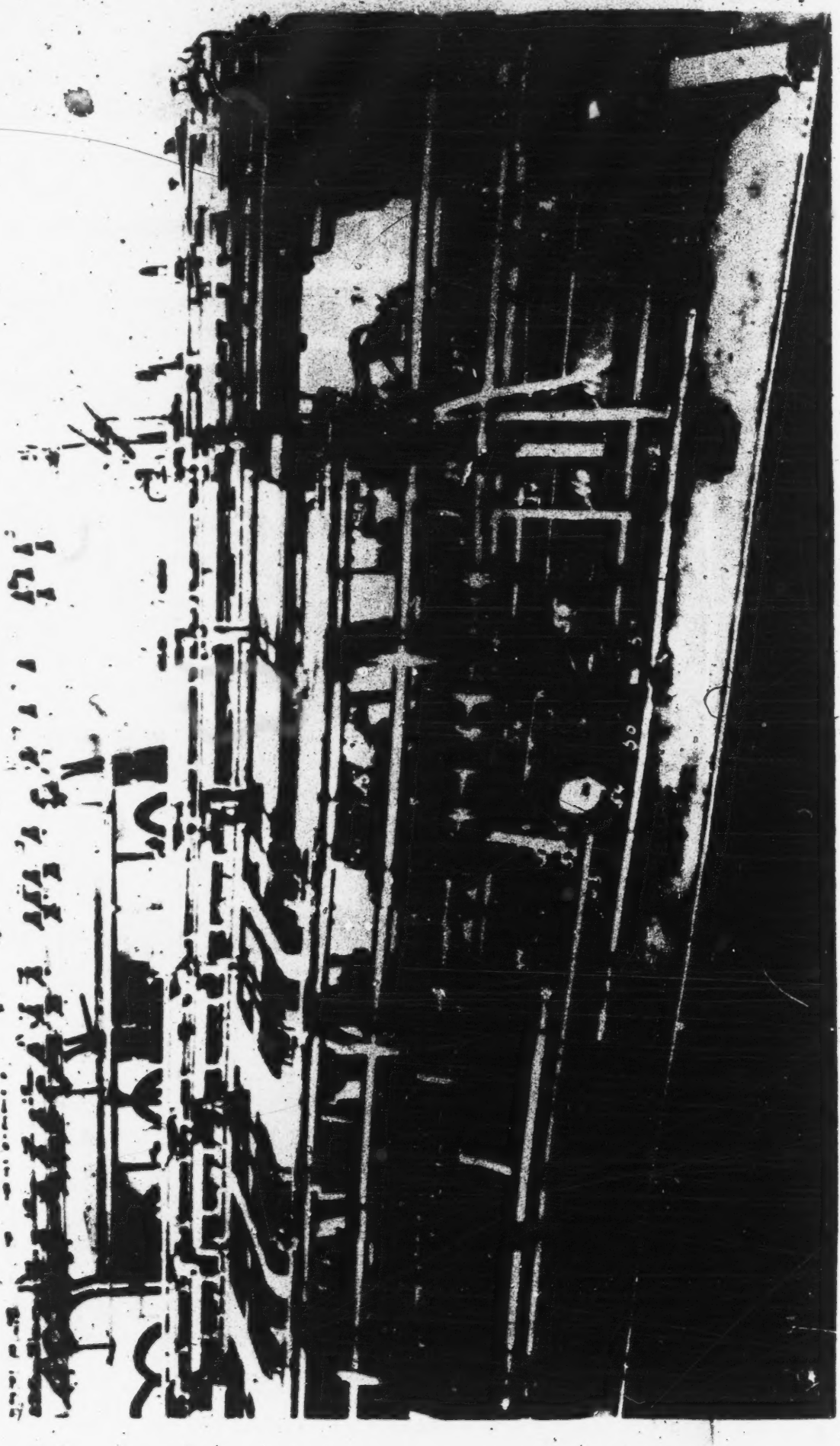

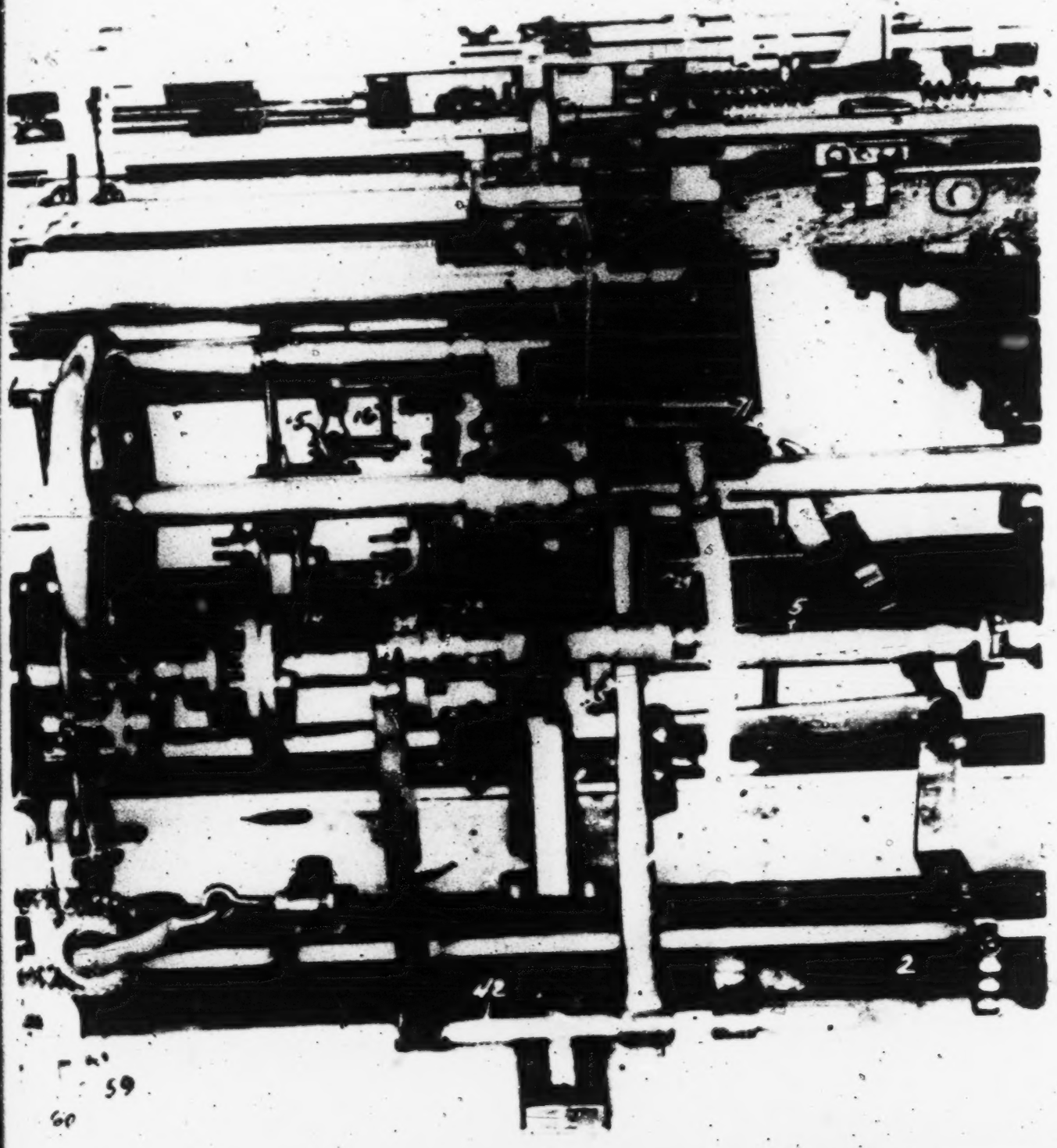
59
60

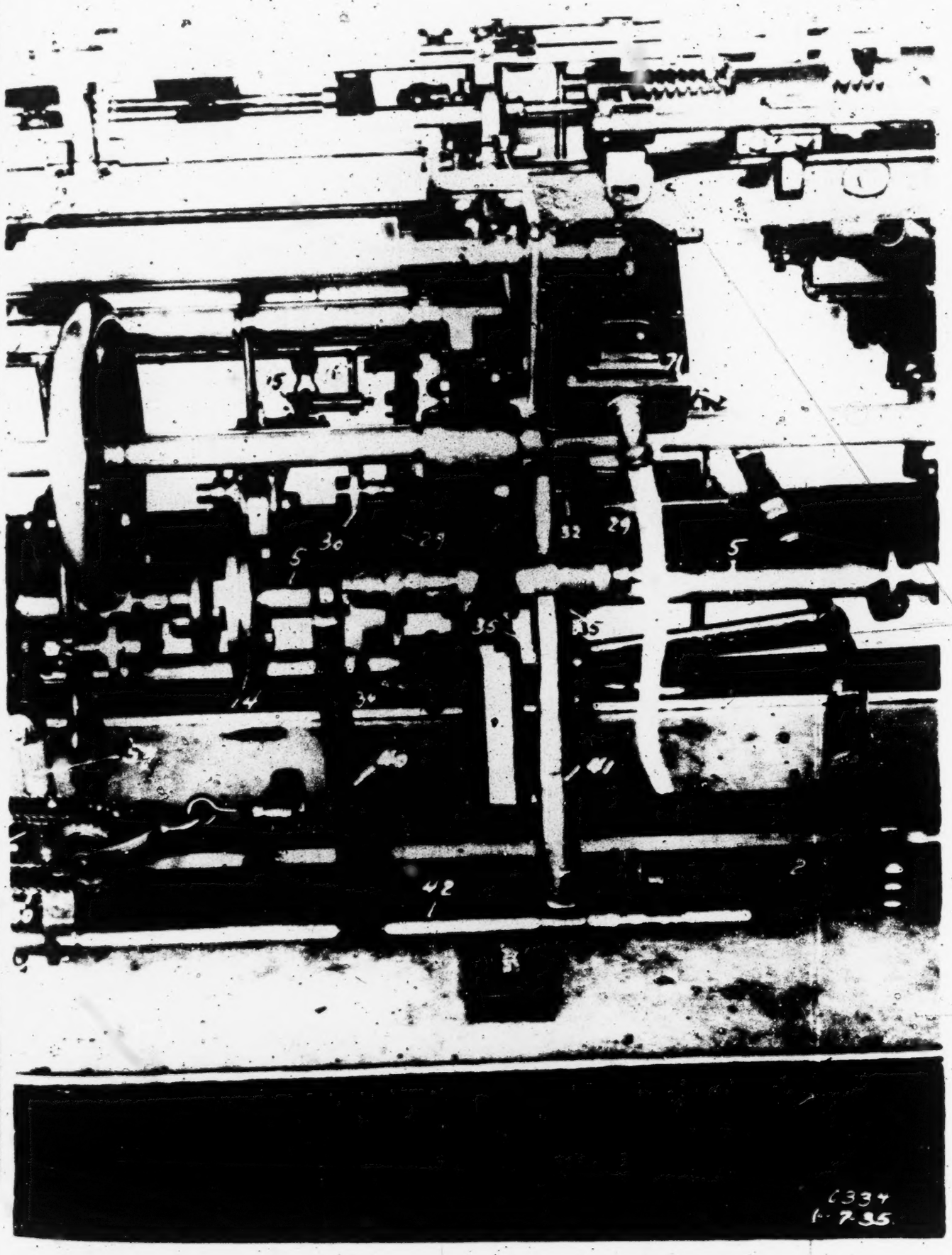
15
71
30
29
32
29
5
5
35
35
14
34
40
41
42
2
6334
1-7-35

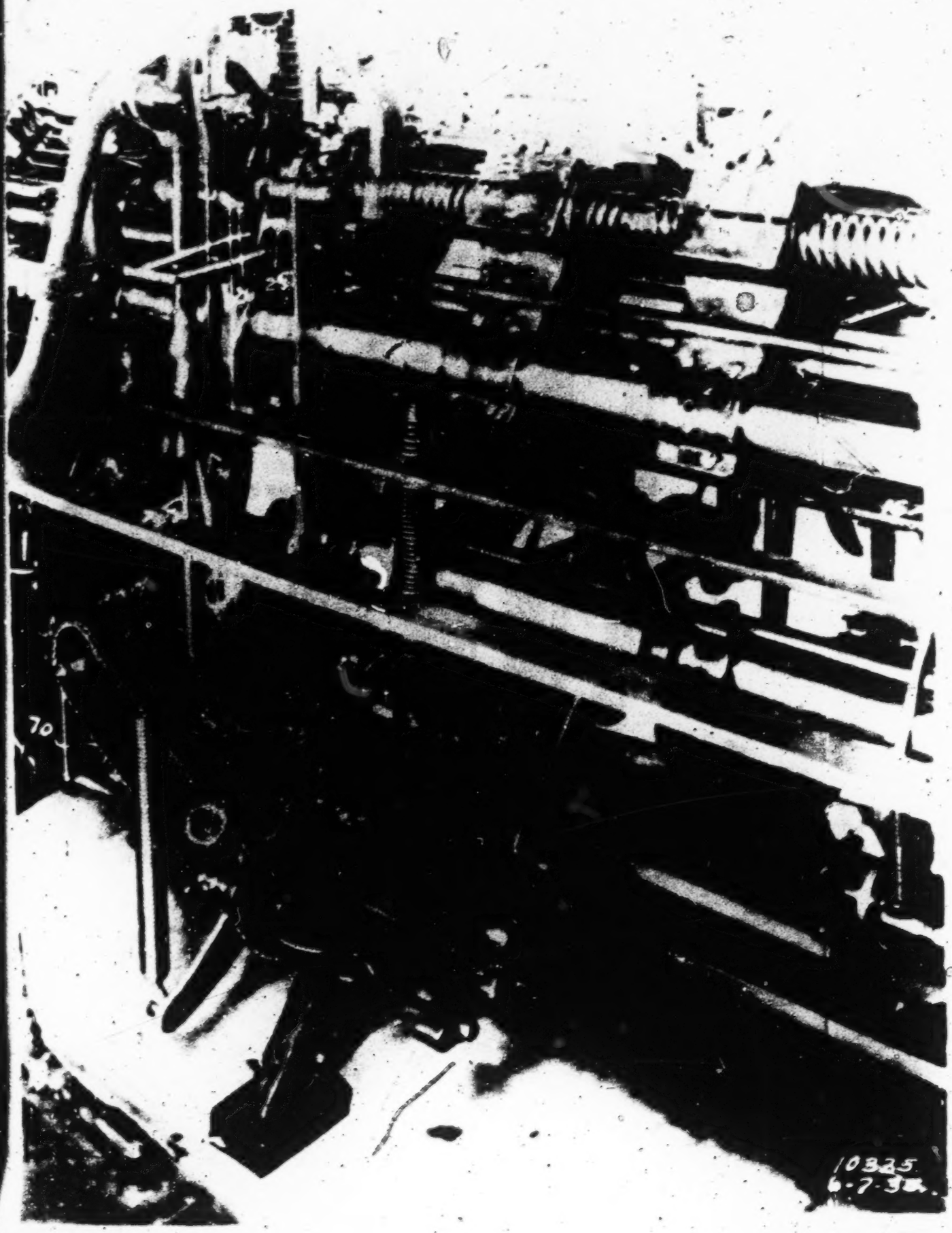
70
10325
6-7-34

413

F. CECKA.

APPARATUS FOR MAKING REINFORCED KNITTED GOODS.

APPLICATION FILED JULY 22, 1914.

1,213,333. Patented Jan. 23, 1917.

3 SHEETS—SHEET 1.

Fig. 1.

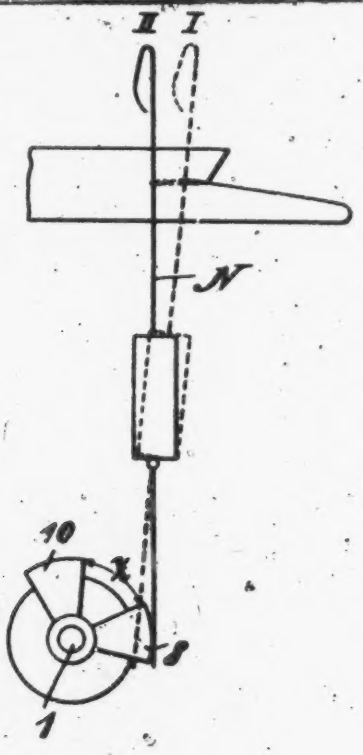

Fig. 2.

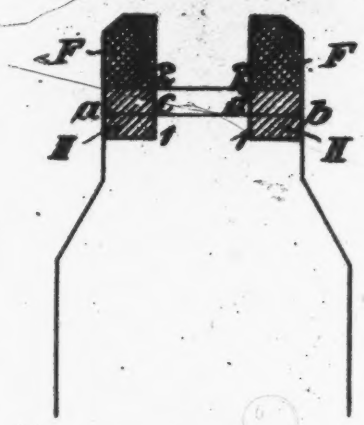

Fig. 3.

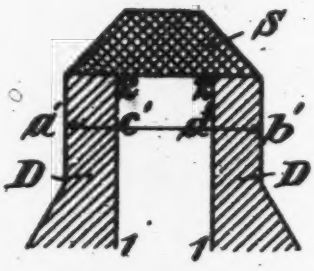

Fig. 4.

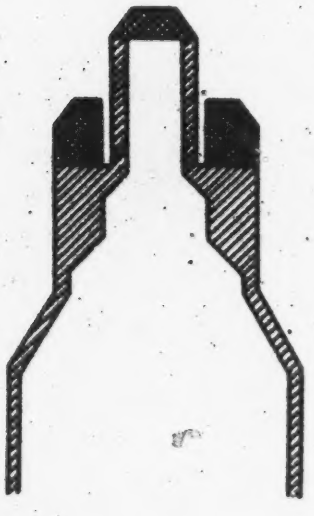

Fig. 5.

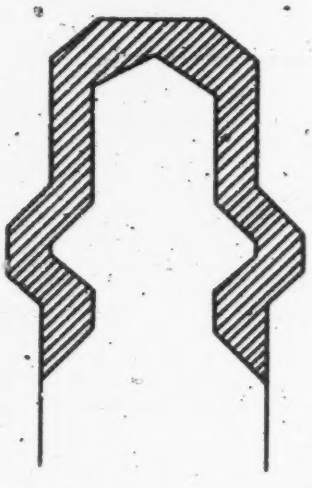

Witnesses:
B. Dommers
E. Lecker

Inventor
Franz Cecka
By [signature] Atty.

414

F. CECKA.

APPARATUS FOR MAKING REINFORCED KNITTED GOODS.

APPLICATION FILED JULY 22, 1914.

1,213,333.

Patented Jan. 23, 1917.

3 SHEETS—SHEET 2.

Fig. 1a

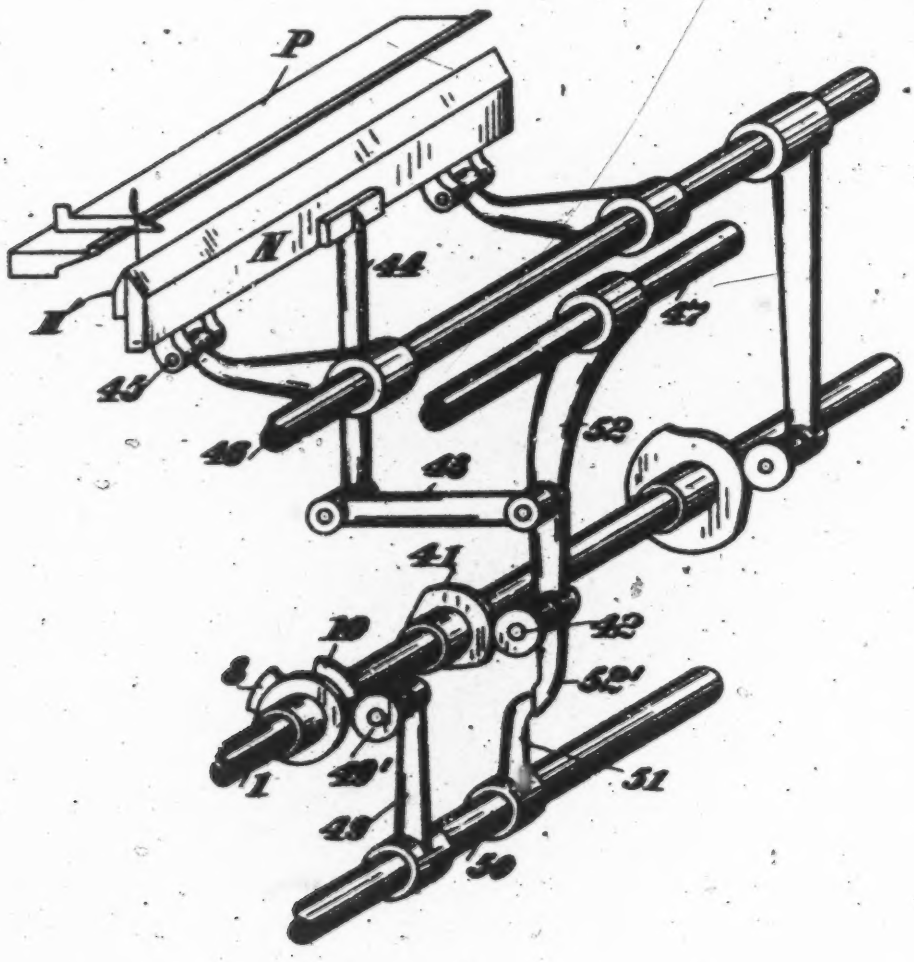

Inventor.
Franz Cecka.
By [signature] Atty.

415

F. CECKA.

APPARATUS FOR MAKING REINFORCED KNITTED GOODS.

APPLICATION FILED JULY 22, 1914.

1,213,333. Patented Jan. 23, 1917.

3 SHEETS—SHEET 3.

Fig: 6.

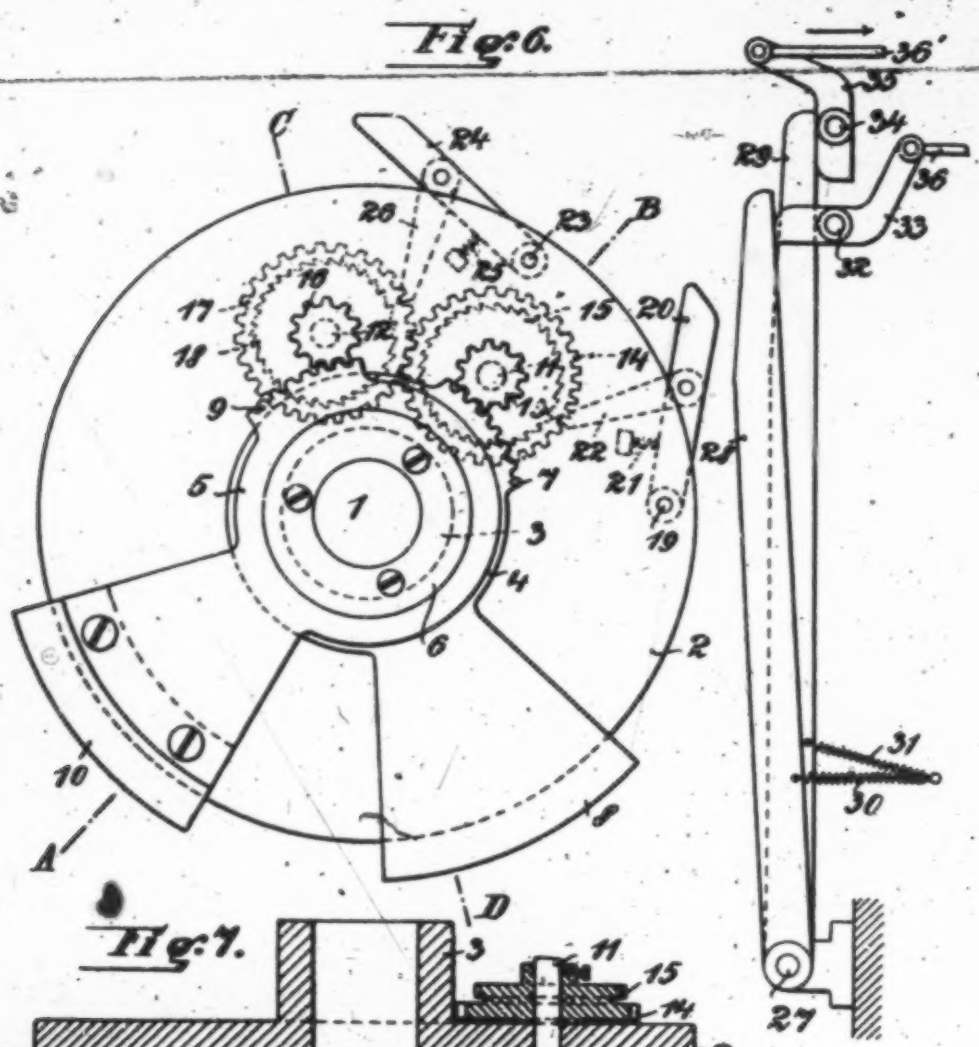

Fig: 7.

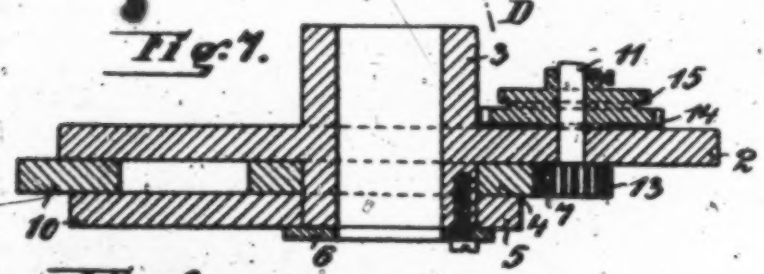

Fig: 8.

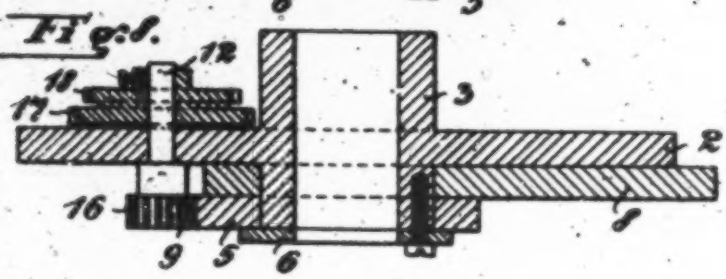

Witnesses:
B. Sommers
E. Leckert

Inventor
Franz Cecka
By [illegible] atty

UNITED STATES PATENT OFFICE.

FRANZ CYCHA, OF CHEMNITZ, GERMANY, ASSIGNOR TO THE FIRM OF SCHUBERT & SALZER MASCHINENFABRIK AKTIENGESELLSCHAFT, OF CHEMNITZ, GERMANY.

APPARATUS FOR MAKING REINFORCED KNITTED GOODS.

1,213,333. Specification of Letters Patent. Patented Jan. 23, 1917.

Application filed July 22, 1914. Serial No. 852,416.

To all whom it may concern:

Be it known that I, FRANZ CYCHA, a citizen of the German Empire, residing at Chemnitz, in the Kingdom of Saxony, Germany, have invented certain new and useful Improvements in Apparatus for Making Reinforced Knitted Goods; and I do hereby declare the following to be a full, clear, and exact description of the invention, such as will enable others skilled in the art to which it appertains to make and use the same, reference being had to the accompanying drawings, and to letters or figures of reference marked thereon, which form a part of this specification.

My invention relates to improvements in a method of and apparatus for making reinforced knitted goods.

In the manufacture of knitted goods it is usual to loosen the loops when making reinforced parts, in order to impart sufficient elasticity to the reinforced parts. If the reinforced parts were made with the same close loops as the parts which are not reinforced, the goods would be close and unelastic in the reinforced parts.

In order to loosen the loops the knitting depth of the frame is increased by rocking the needle bar so as to produce loops of increased length, for which purpose the known loosening and closing cam is set at the beginning of the operation so as to produce for a definite part of the aggregate stroke of the thread guide a different knitting depth.

The object of the improvements is to provide a method of and an apparatus for knitting reinforced goods by means of which fashioned reinforced parts can be produced, *i. e.* reinforced parts which are of varying breadth.

With this object in view my invention consists in the matters to be described hereinafter and particularly pointed out in the appended claims, reference being had to the accompanying drawings and to the letters of reference marked thereon.

In said drawings Figure 1 is a diagrammatical view showing a knitting apparatus of known construction, Fig. 1ª, is a perspective view of the mechanism for actuating the needle bar. Figs. 2 and 3 are diagrammatical views showing respectively reinforced heel and toe portions of a knitted stocking prior to uniting the sides of the same, the reinforced portions having the forms now in use, Figs. 4 and 5, are similar views showing goods in which the reinforced portions are made according to my improved method, Fig. 6, is a view of a mechanism suitable for making reinforced goods according to my improved method, and Figs. 7 and 8, are cross-sections taken respectively on the lines A—B and C—D of Fig. 6.

The same letters of reference have been used in all the views to indicate corresponding parts.

Referring to Figs. 2 and 3, in the manufacture of the cross-hatched parts F of the heel and S of the toe the length of the loops is increased over the whole breadth of the head of the frame. However, if it is desired to make a reinforced ankle H, as is shown in Fig. 2, or a double sole D, as is shown in Fig. 3, a part only of the breadth a—b and a'—b' of the blank is reinforced, *i. e.* the portions a—c and d—b and a'—c' and d'—b', while the portions c—d and c'—d' are not reinforced. In such cases the knitting depth is temporarily varied by pressing the needle bar N from the position I into the position II, so as to increase the length of the loops. This is done by means of cams 8 and 10, mounted on a shaft 1. As the distance s of the said cams 8—10 is constant, the border lines 1—2 and 1′—2′ of such reinforced portions are straight, as is shown in Figs. 2 and 3. The breadth c—d and c'—d' between the reinforced portions can be set before the operation, but it can not be changed in the course of the manufacture of the goods. The border lines of the reinforced parts are always made by the same needles of the head of the frame

While for the proper comprehension of the object of the present invention the diagrammatical showing of the operating connection of the needle bar N, as given in Fig. 1, is obviously sufficient, the real relation of the parts and their proper coöperation may be ascertained by reference to Fig. 1ª, in which 41 designates the ordinary actuating cam for the needle bar N. The cam 41 is secured upon the shaft 1 and controls a bowl 42 carried by an arm 52 which with its shaft 47, is mounted to be able to oscillate. The needle bar N is adapted to swing on the pivots 45 and about the shaft 46, and is operatively connected to the said rocking arm 52 by means of links 43 and 44. If the actuating

cam 41 moves the bowl 42 radially outward, the rocking arm 32 will thereupon cause the needle bar N to swing toward the presser bar P as indicated by the arrow II. Upon the said shaft 1 there are mounted the cams 8 and 10 above described as producing the required additional movements of the needle bar for temporarily increasing the length of the loops to be formed. For this purpose the cams 8 and 10 are adapted to cooperate with a bowl 49' carried at the end of an arm 49, which is secured upon a rocking shaft 50. The latter shaft 50 is provided with a second arm 51 adapted to engage an extension 32' of the arm 32 controlling the operation of the needle bar N.

When by any suitable means the bowl 49' is shifted into the path of action of the loop loosening cams 8 and 10, the needle bar N will then be controlled by the said loop loosening cams 8 and 10 and moved according to the extent of the strokes of the latter.

By means of apparatus of this class such reinforced goods can not be made which are provided with fashioned reinforced portions, such as are shown for example in Figs. 4 and 5, where not only the breadth, but also the inner border lines of the reinforced portions are changed and made by different needles. Therefore the apparatus can be used only in such cases in which a reinforced portion is to be produced which begins in definite rows of loops and which is not changed in the course of the operation. But where fashioned reinforced portions are to be made in which the breadth is increased or reduced in the course of the manufacture the apparatus can not be used.

In order to obtain a variation of the knitting depth which corresponds to the desired form of the reinforced portions, the cams of the loosening and straightening cam are so mounted relatively to each other that their relative position can automatically be changed while the machine is in operation, so that the effect of the cams and the setting of the needle bar caused thereby and the variation of the knitting depth can be performed in the successive rows of loops at different points. Thereby I am enabled to produce reinforced portions which are gradually increased or reduced, such as is shown by way of example in Figs. 4 and 5. The cams are set in a suitable way by means of a jacquard card or a counting mechanism according to the desired form of the reinforced parts. Thereby I am also enabled to produce reinforced portions of uniform breadth in narrowed or widened goods.

In order that my invention be more clearly understood mechanism for putting the same into effect has been shown by way of example in Figs. 6 to 8. As shown in the said figures, a shaft 1 carries a disk 2 the hub 3 of which provides a loose support for disks 4 and 5 which are held in position by means of a washer 6. The disk 4 is provided with rack teeth 7 and it is made integral with a cam 8, and the disk 5 is formed with rack teeth 9 and is provided with a cam 10. In bores made in the disk 2 two shafts 11 and 12 are mounted. On the shaft 11 and at one side of the disk 2 a gear wheel 13 is mounted which is in mesh with the rack teeth 7, and at the opposite side of the disk 2 a gear wheel 14 and a ratchet wheel 15 are secured to the shaft 11.

To the shaft 12 a gear wheel 16 and at the opposite side of the disk 2 a gear wheel 17 and a ratchet wheel 18 are secured. The gear wheels 14 and 17 are in mesh with each other.

On a pivot bolt 19 of the disk 2 an arm 20 has a rocking support which projects beyond the disk 2 and is acted upon by a spring 21, and to the said arm a pawl 22 is jointed which is in engagement with the ratchet wheel 15. On a second pivot bolt 23 a similar arm 24 has a rocking support which is acted upon by a spring 25, and which carries a pawl 26 engaging in the teeth of the ratchet wheel 18. On a pivot bolt 27 secured to a fixed part of the framework two shift levers 28 and 29 are mounted which are normally held away from the disk 2 by springs 30 and 31 respectively. The lever 28 is in the path of the arm 20 and the lever 29 in the path of the arm 24.

On a pivot bolt 32 a bell crank lever 33 is mounted which acts on the lever 28, and on a pivot bolt 34 a bell crank lever 35 is mounted which acts on the lever 29. To the free ends of the said levers links 36 and 36' are jointed.

The operation of the mechanism is as follows: The links 36 and 36' are controlled by suitable means such for example as a jacquard card or another counting mechanism. For example, if the link 36 has been drawn to the right as is shown in Fig. 6 the bell crank lever 33 connected therewith forces the shift lever 28 forward and into opposition to the spring 30 and into position for engagement with the arm 20. If now the shaft 1 and the disk 2 are rotated the arm 20 gets in engagement with the shift lever 28 and it is pushed downward thereby, so that the pawl 22 mounted thereon operates the ratchet wheel 15. Thereby the gear wheel 13 as well as the gear wheel 14 are rotated, and the gear wheel 13 which is in mesh with the rack teeth 7 of the disk 4 moves the cam 8 away from the cam 10. As the gear wheel 14 is in mesh with the gear wheel 17 also the gear wheel 16 is rotated which is in mesh with the teeth 9 of the disk 5 carrying the cam 10, so that the said cam is moved in a direction opposite to that of the cam 8. Therefore the increase of the distance of the cams 8 and

10 corresponds to the double shifting movement imparted by the pawl 22 to the ratchet wheel.

Whenever the bell crank lever 33 forces the shift lever 28 forward upon each rotation of the shaft 1 the distance of the cams 8 and 10 is increased, so that in the blank being knitted the breadth of the portion which is not being reinforced is enlarged; because the movement of the needle bar causing the increase in the knitting depth ceases at an earlier moment and begins later. If on the other hand it is desired to reduce the portion which is not to be reinforced, the bell crank lever 35 must be moved by the counting mechanism. Thereby the shift lever 29 located in the path of the arm 24 is rocked forward, so that upon rotation of the shaft 1 and the disk 2 the arm 24 is rocked and the pawl 26 mounted thereon acts on the ratchet wheel 18, which carries along the gear wheels 16 and 17. The gear wheel 16 engages in the teeth of the rack teeth 9 of the disk 5 and shifts the cam 10 mounted on said disk toward the cam 8. Simultaneously the gear wheel 17 rotates the gear wheels 14 and 13 and through the latter the disk 4 and the cam 8 mounted thereon, so that now both cams are shifted relatively to each other a distance corresponding to the double path of the ratchet wheel 18.

By providing a jacquard pattern or selector or controlling mechanism of the proper form the beginning and the end of the change of the knitting depth can be varied as is necessary for obtaining the desired form of the reinforced part.

While in describing the invention reference has been made to a particular example embodying the same, I wish it to be understood, that my invention is not limited to the general arrangement and construction of the parts shown in the figures. For example, the mechanism for setting the cams 8 and 10 can be constructed in a different way, and the change of the knitting depth can be performed by other means.

I claim herein as my invention:

1. In an apparatus for making reinforced knitted goods, the combination with the needles, and their operating mechanism, of means comprising coöperating cams mounted on the same shaft for setting the needles according to the desired knitting depth, gear wheels operatively connecting the cams for movement in opposite directions, and automatic means to set said cams in different positions.

2. In an apparatus for making reinforced knitted goods, the combination with the needles, and their operating mechanism, of means for setting the needles according to the desired knitting depth, said means comprising a rotary disk, a pair of cam disks mounted on said disk coaxially thereof, and gear wheels mounted on the disk and connecting the cams for operation in opposite directions, and automatic means to set said cams in different positions.

3. In an apparatus for making reinforced knitted goods, the combination with the needles, and their operating mechanism, of means for setting the needles according to the desired knitting depth, and means comprising a rotary disk, a pair of cam disks mounted on said disk coaxially thereof, gear wheels mounted on the disk and connecting the cams for operation in opposite directions, and pawl and ratchet mechanism mounted on said disk and adapted to operate the gear wheels for setting the cams in different positions, and automatic operating means for the pawl and ratchet mechanism.

4. In an apparatus for making reinforced knitted goods, the combination with the needles, and their operating mechanism, of means for setting the needles according to the desired knitting depth, and means comprising a rotary disk, a pair of cam disks mounted on said disk coaxially thereof, gear wheels mounted on the disk and connecting the cams for operation in opposite directions, and duplicate pawl and ratchet mechanism mounted on said disk and adapted to operate the gear wheels for shifting the cams one away from and the other one toward each other, and automatic operating means for the pawls and ratchet mechanisms.

5. In an apparatus for making reinforced knitted goods, the combination with the needles, and their operating mechanism, of means for setting the needles according to the desired knitting depth, said means comprising a rotary disk, a pair of cam disks mounted on said disk coaxially thereof, gear wheels mounted on the disk and connecting the cams for operation in opposite directions, and duplicate pawl and ratchet mechanism mounted on said disk and adapted to operate the gear wheels for shifting the cams one away from and the other one toward each other, and automatic, selector controlled operating means for operating the pawl and ratchet mechanisms.

6. In a knitting apparatus, the combination of knitting needles, operating mechanism therefor, means for controlling the knitting depth of said needles comprising a pair of revoluble controlling members adapted to assume variable positions relative to each other, and means for varying the controlling positions of said revoluble controlling members during the knitting operation, whereby the timing in the change of the knitting depth may be varied in accordance to the pattern to be worked.

7. In a knitting apparatus, the combination of knitting needles, operating mechanism therefor, means for controlling the

knitting depth of said needles comprising a pair of revoluble controlling members adapted to assume variable positions relatively to each other, a pair of operating members one for each of said revoluble controlling members, said pair of operating members being operatively interconnected to actuate said controlling members synchronously in opposite directions, and shiftable driving members for each of said operating members and adapted to be actuated independently of each other during the knitting operation, whereby the timing in the change of the knitting depth may be varied in accordance to the pattern to be worked.

8. In a knitting apparatus, the combination of knitting needles, operating mechanism therefor, means for controlling the knitting depth of said needles comprising a pair of revoluble controlling members adapted to assume variable positions relative to each other, a pair of operating members one for each of said revoluble controlling members, said pair of operating members being operatively interconnected to actuate said controlling members synchronously in opposite directions, shiftable driving members for each of said operating members and adapted to be actuated independently of each other during the knitting operation, and operative connections in conjunction with each of said shiftable driving members for having said shiftable driving members controlled by a selector, whereby the timing in the change of the knitting depth may be varied in accordance to the pattern to be worked.

In testimony that I claim the foregoing as my invention, I have signed my name in presence of two subscribing witnesses.

FRANZ CECKA.

Witnesses:
F. E. Stecker,
W. H. Mücke.

PLAINTIFF'S EXHIBIT No. 57 571

Fourthly: For dividing the points from the filling up box when the filling up box is required to work on the selvidge of the fabric.

Dated Fourteenth day of December 1888.

GEORGE SOWTER

COMPLETE SPECIFICATION.

Improvements in Machinery and Apparatus Employed in the Manufacture of Knitted Fabrics.

GEORGE SOWTER 88 Clarendon Villas Robinhood Chase Nottingham in the Town and County of Nottingham, Hosiery Manufacturer do hereby declare the nature of this invention and in what manner the same is to be performed, to be particularly described and ascertained in and by the following statement:—

My improvement relates to Knitting Machines employed in producing articles known as Hose, Socks, Pants, Vests or any similar articles in which widening and narrowings are required at any distance from the Selvedge. The usual mode of working the widening and narrowing instruments which are carried by rods or bars is by attaching such rods or bars to the Screw box carrying the Selvedge Stops and moving them at the same time by this mode only one uniform set of widenings or narrowings can be made, that is if the Instruments are set to work on 4 leads or 8 needles from the Selvedge, they traverse with the Stops and remain at one uniform distance from the Selvedge of the Fabric.

I propose to lengthen the Brackets carrying the Screw upon which Stops for the thread layer are traversed to the right or left and carry with these Brackets a seperate Screw upon which a Screw box with arm is attached to traverse the points or Instruments to the right or left.

Independently of the Selvedge Stops by the following means the outer end of Axle of the top Screw is provided with two Ratchett Wheels and Clawkers, the Clawkers are fastened with bolts to the ordinary Clawkers which drives the Screw upon which Stops for thread layers are traversed thus giving a simultanious movement to widen or narrow from the Selvedge in the usual manner, a second pair of Ratchett Wheels are placed on the axle of the top Screw, inside the end Bracket driven by Clawkers hinged to a lever rocking on an axle carried by the Framing of the Machine the lever having a rising and falling movement given it by a cam, to traverse the Instruments to the right or left, before the Screw and Stops for thread layer are put in motion, the axle for the cam for narrowing and widening moved by hand between the outside Clawkers are made longer to carry a Pentagonal cam and Ratchett Wheel, inside, to throw the Clawkers in gear on one side and out of gear on the other, alternately, by a small Ratchett hinged to the outside lever which has a rising and falling movement and is automatic in its action.

I also propose to use a wide set of points or Instruments for transfering the loops to the right or left as required, these leads and Instruments are carried on a rod attached to the narrowing machine and fitted up to the ordinary Instrument or coverer used on the Selvedge when in action, by this arrangement the ordinary instrument used on the Selvedge can be traversed by the top Screw, to the required distance, inside the Fabric from the Selvedge, and the wide set of Instruments brought down to the Instruments used on the Selvedge to transfer the loops when widening or narrowing is required any distance from the Selvedge of the Fabric so as to form pockets or gores without seams being required in Ladies Vests or forming the Heel of Stockings without seams and such like articles.

DESCRIPTION OF DRAWINGS.

Fig. 1. is a front view with cam shaft removed.
Fig. 2. a sectional end elevation.
Fig. 3. an end elevation.

571

Fig. 4. a front elevation of one set of needles, showing one set of points or instruments attached to the Selvedge points or instruments and one set separated from the Selvedge points or instruments.

A. Fig. 1. is the screw for working the Selvedge points as in the ordinary machine with its box B ratchett wheels C and D, clawkers E and F, while I is part of machine standard. For working my improvements I lengthen the brackets H. H. carrying the screws A and L with its nut or box M. On the end of this screw are two pairs of ratchett wheels N and O, and P and Q the latter being worked from the clawkers E and F by attaching to them additional clawkers R and S, the other pair of ratchett wheels I work from the clawkers T and U by means of a cam and lever Y similar to those used for clawkers E and F.

I also lengthen the axle of the cam G. Fig. 3. and secure to it a cam V. Fig. 2. with an odd number of faces and a ratchett wheel W having twice as many teeth as the cam has faces. in the drawings they are shown as having 10 and 5 respectively.

On the lever K. Fig. 3. which operates the front clawkers E and F. I attach another clawker X. Fig. 2. which works the ratchett wheel W thus ensuring the automatic revolution of the cam V which throws the clawkers T and U in and out of gear alternately and causes the screw box M to traverse inwards or outwards as required.

In Fig. 4. *a. a.* are the needles on which the Fabric is made, *b. b.* the points or instruments for narrowing or widening in the usual manner. in addition to these I use a wider set of points or instruments *c. c.* at each end, which can be secured to *b. b.* by screws *d.* so that they can both be moved as one piece from the top screw. The points or instruments *c.* on the right hand side of Fig. 4. are shown separated from the Selvedge points or instruments, being partially revolved about the shaft *e.* but I do not confine myself to any particular method of separating the points or instruments.

Fig. 5. is a diagram of a pant, showing the two sets of widenings. 1. forming the split Hips. 2. are the sets of narrowings forming the twisted Ankles. 3. are needle narrowings which can be dispensed with if not required.

Having described the drawings of my apparatus which is applied to each end of the Knitting machine I will proceed to explain the working of the same so that it may be fully understood :—In making a Ladies Vest, fashioned gore or bosom, without a seam in the gore, I make the bottom portion of the body in the usual manner to the commencement, to widen and form the gore, the points or instruments *b* are traversed in 5 or 6 inches from the Selvedge as required, the wide points or instruments *c* are then secured by the screws *d* to the points *b. b.* Clawkers E and S. Fig. 1. acting on Ratchett wheels C and P attached to the screws A and L traverses the box B and M and points *c. b.* simultaneously extending the Selvedge and stops B one needle outwards, at the same time the clawker X is acting on Ratchett wheel W on cam V throws in gear clawker U and clawker T. out of gear, I then draw 2 or more courses clawker U acting on Ratchett wheel O traverses box M and points *c b* five needles inwards from the last widening, Clawkers E and S come into operation again extending the Selvedge and stops B one needle, at the same time clawker X acting on Ratchett wheel W on cam V throws in gear clawker T and clawker U out of gear, I then draw 2 or more courses clawker T coming into action on Ratchett wheel N traverses box M and points *c b* four needles outwards thus making two distinct rows of fashioning and leaving the points one needle inwards from the Selvedge when 18 or any other number of widenings required are made, I reverse the action of clawkers E and S and narrow in the same manner the number of courses required, forming the gore without a seam and leaving the Fabric the same width on the machine. I then disconnect the points or instruments *c* traverse the points *b* on to the Selvedge and proceed to make the remaining portion of the body in the usual manner.

To make a pant with what are known as Split Hips and Twisted Ankles without any seam in the Hips or Ankles, I traverse in the points 6 or 7 inches secure instruments *c* to points *b* by screws *d* and proceed to widen out the two Selvedges

5 1/2

same as in gore, six or seven leads as required, I then disconnect instruments traverse points *b* on to the Selvedge widen out the pants in the usual manner to gusit and narrow them down the thigh, make 5 or 6 inches plain, traverses in the points *b* on one side only 4 or more courses, secure instrument *c* to point *b* and proceed to narrow Ankle same as gore in Vest, for 10 or more leads as required.

Having now particularly described and ascertained the nature of my said Invention and in what manner the same is to be performed I declare that what I claim is

Firstly :—I claim for working the point or Instrument bars automatically, without being attached to Stops or Selvedge box.

Secondly :—To widen or narrow with the points or Instruments, without interfering with the Selvedge Stops at any distance required from the outside of the Fabric, also to widen or narrow on the one Needle at any distance the Instruments are set to.

Thirdly :—To form a set of Widenings or Narrowings extending or contracting the Fabric to the right and left of such widenings or narrowings.

Fourthly :—For dividing the points from the filling up box when the filling up box is required to work on the Selvedge of the Fabric.

Dated this 18th day of September 1889.

GEORGE SOWTER.

London : Printed for Her Majesty's Stationery Office, by Darling & Son, Ltd.—1890.

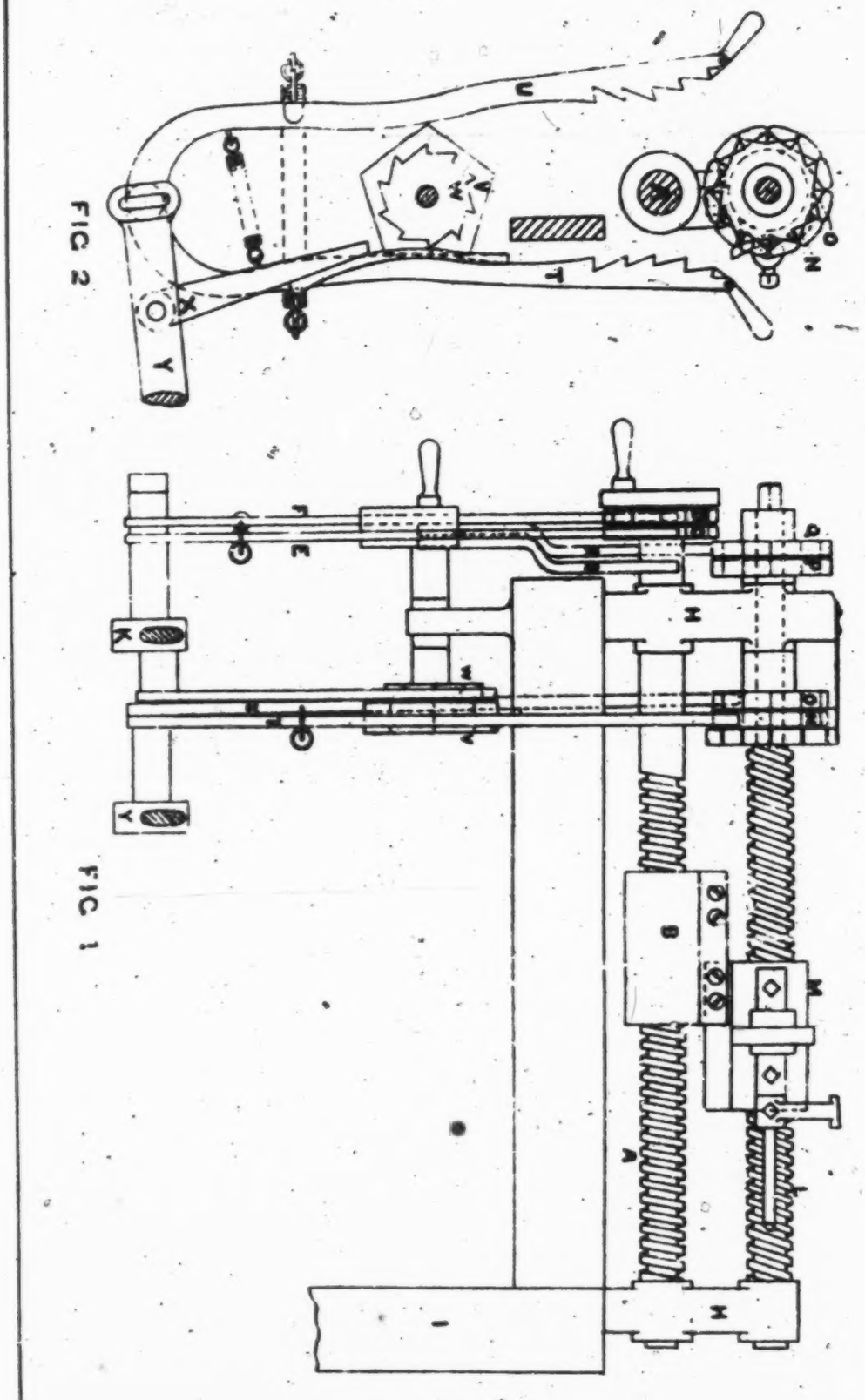

FIG 2

FIG 1

Printed by Harrison and Son Ltd
for the Majesty's Stationery Office 1950

This Drawing is a reproduction of the Original on a reduced scale.

A.D. 1885. Dec 18. No 18,461.
SOWTER'S Complete Specification.

SHEET 2.

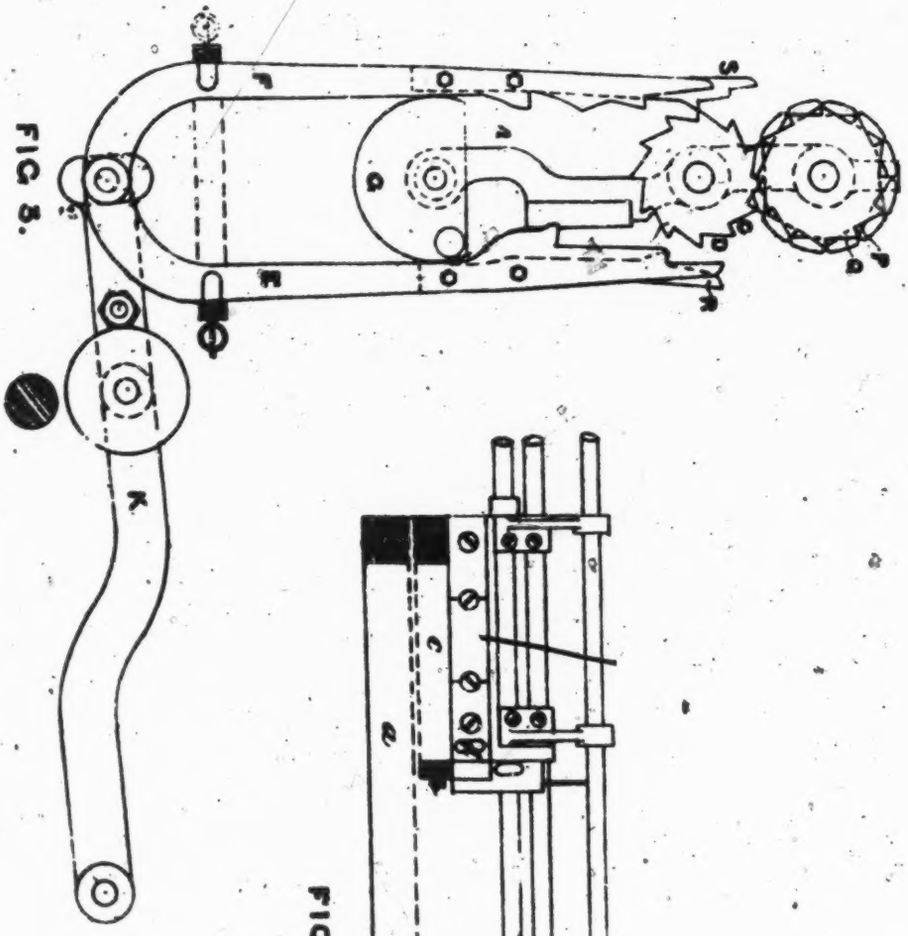

FIG 3.

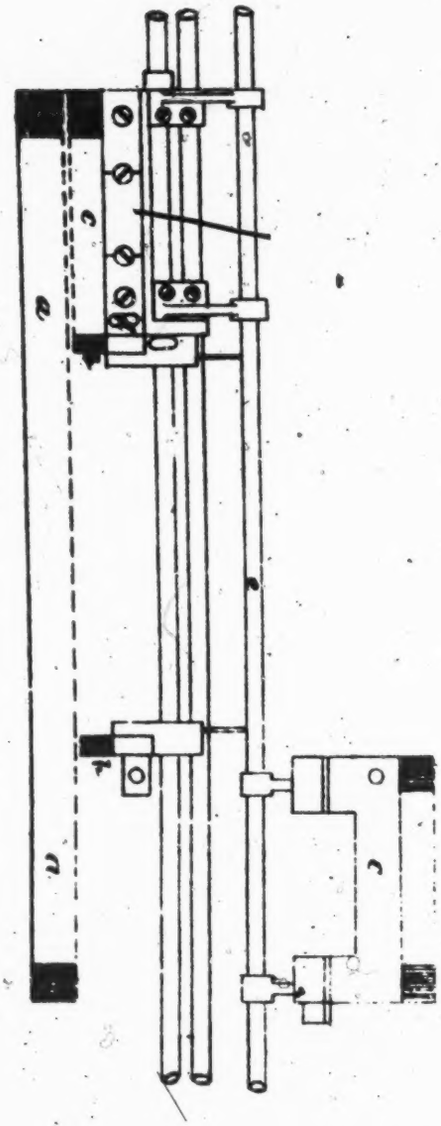

FIG 4

57/5

576 1888, Dec 18. No 18,461
SOWTER'S Complete Specification.

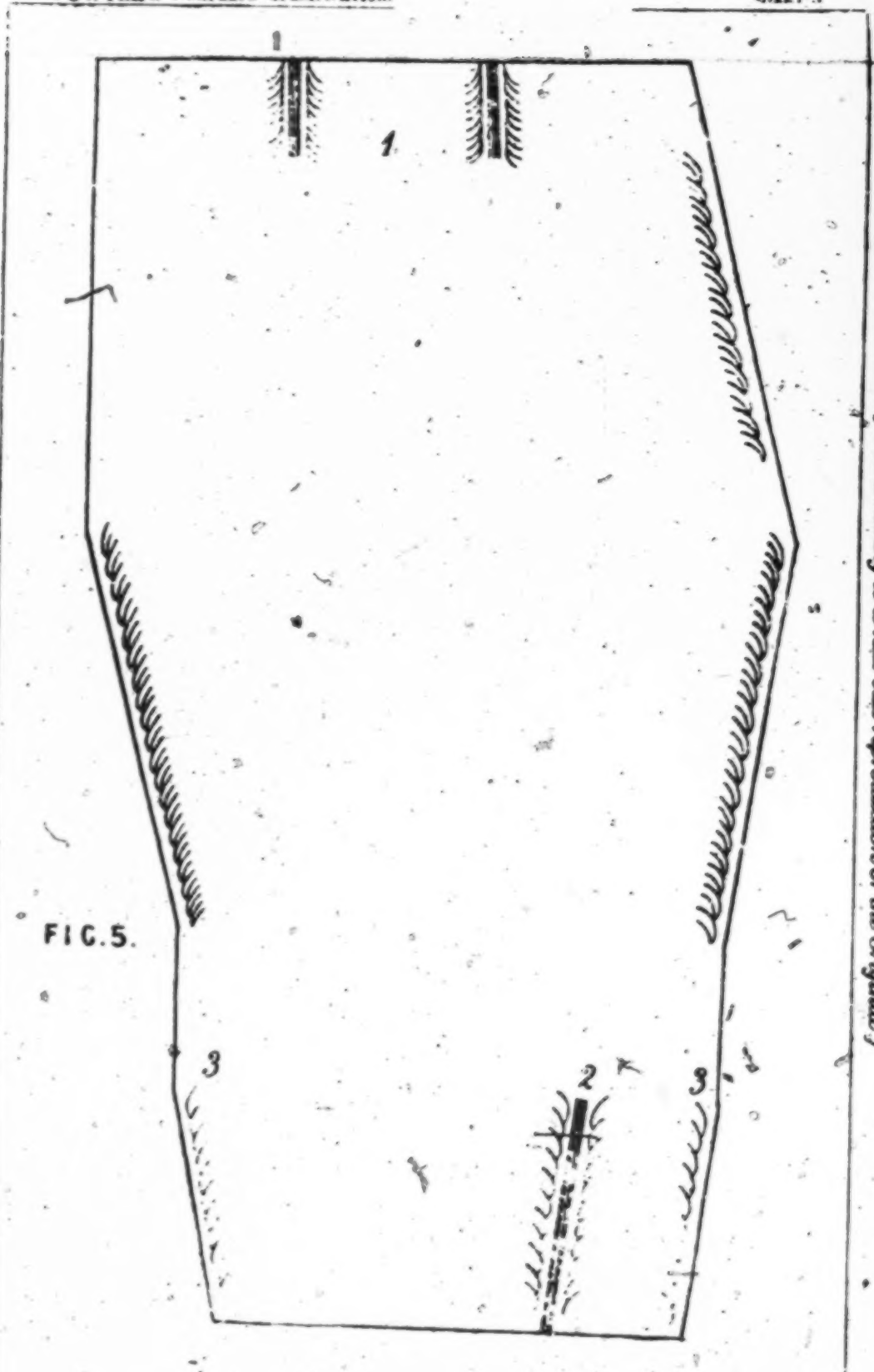

FIG. 5.

[This Drawing is a full-size reproduction of the Original.]

London Printed by Darlaire and Son Ltd
for Her Majesty's Stationery Office 1890

577

DEFENDANT'S EXHIBIT B

THE MANUFACTURERS OF

THE

READING

FULL-FASHIONED
KNITTING MACHINE

Announce

THE DOUBLE SPINDLE REINFORCED SELVEDGE ATTACHMENT

TEXTILE MACHINE WORKS

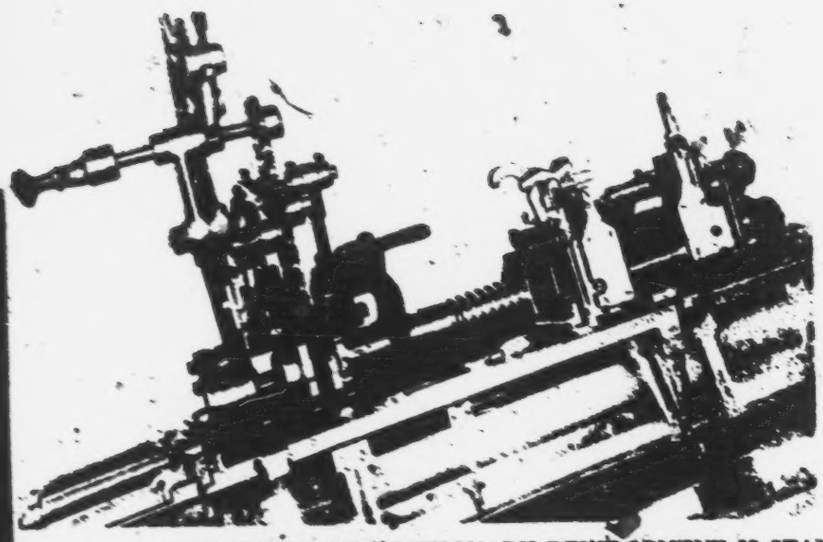

LEFT END SPINDLE

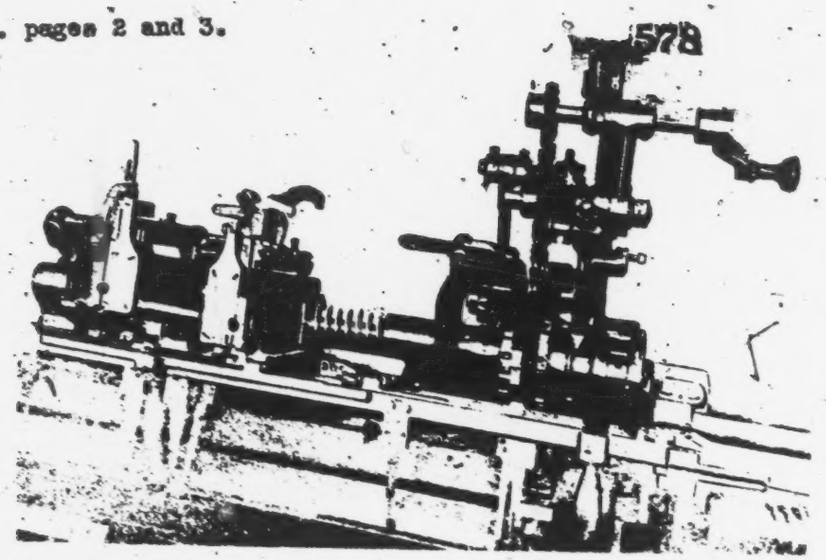

RIGHT END SPINDLE

THIS TRULY REVOLUTIONARY DEVELOPMENT IS STANDARD EQUIPMENT ON THE 1935 "READING" FULL-FASHIONED KNITTING MACHINE, AND OFFERS OUTSTANDING ADVANTAGES TO THE MANUFACTURER OF QUALITY FULL-FASHIONED HOSIERY:

Combines the following Attachments into a single compact unit:

Two Needle Closed Split Attachment for Leggers or Footers

Cotton Sole Attachment for Footers equipped with the Alternating Three Carrier Attachment

Alternating Slide Attachment on Leggers for making heel-in-heel in connection with the Alternating Three Carrier Attachment

Eliminates Plating Tackle from the Narrowing Head

Permits removal of the one-half inch rod formerly used to control the Plating Levers, thus providing easy removal and replacement of sinkers and dividers

Furnishes positive locking device for carrier rods when knitting Cradle Foot, Black Heel, or Plating

Includes Friction Box and Slide arrangement for making improved selvedge reinforcing in connection with the Alternating Three Carrier Attachment

Provides more rigid and flexible construction through the use of right and left end spindles

Makes uniform distribution of plating and reinforcing friction boxes possible

Includes means for producing a wide range of shadow clock designs, both symmetrical and non-symmetrical in shape

Main Chain Motion operation for both left and right spindles

Improved Camshaft Rocker replaces the Cradle Type Rocker formerly used, producing more uniform and accurate rocking motion at high speed. Rocker action controlled directly from Reinforced Selvedge Spindles

Safety mechanism to prevent over-travel of spindle nuts

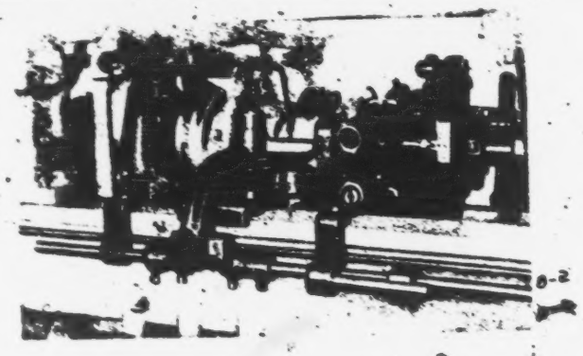

B-2

REAR VIEW OF IMPROVED CAMSHAFT ROCKER

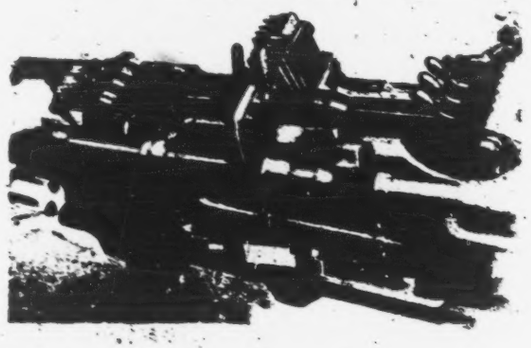

CARRIER ARRESTING AND PLATING UNIT ON NARROWING HEAD

B-3

THE READING

DOUBLE SPINDLE REINFORCED SELVEDGE ATTACHMENT

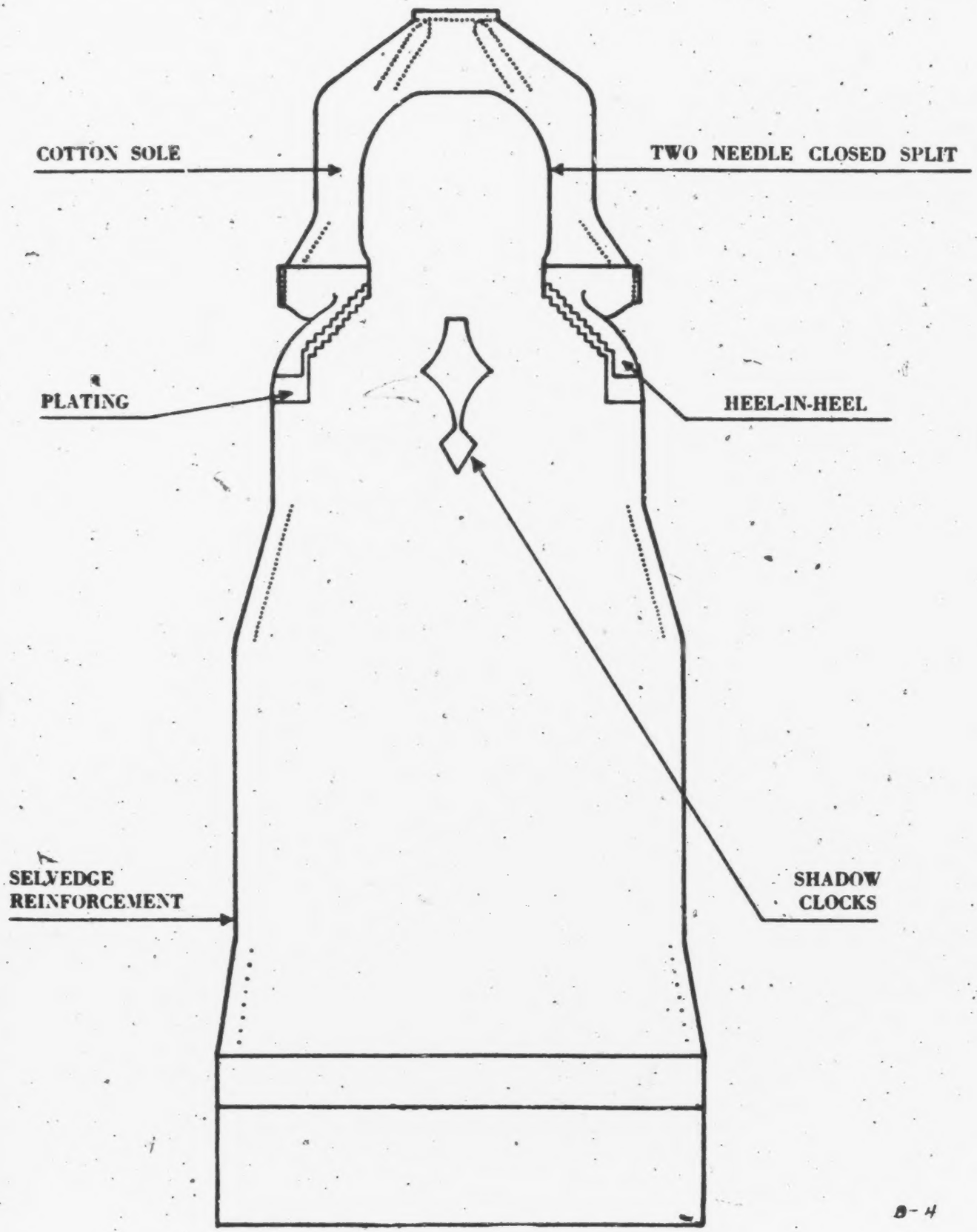

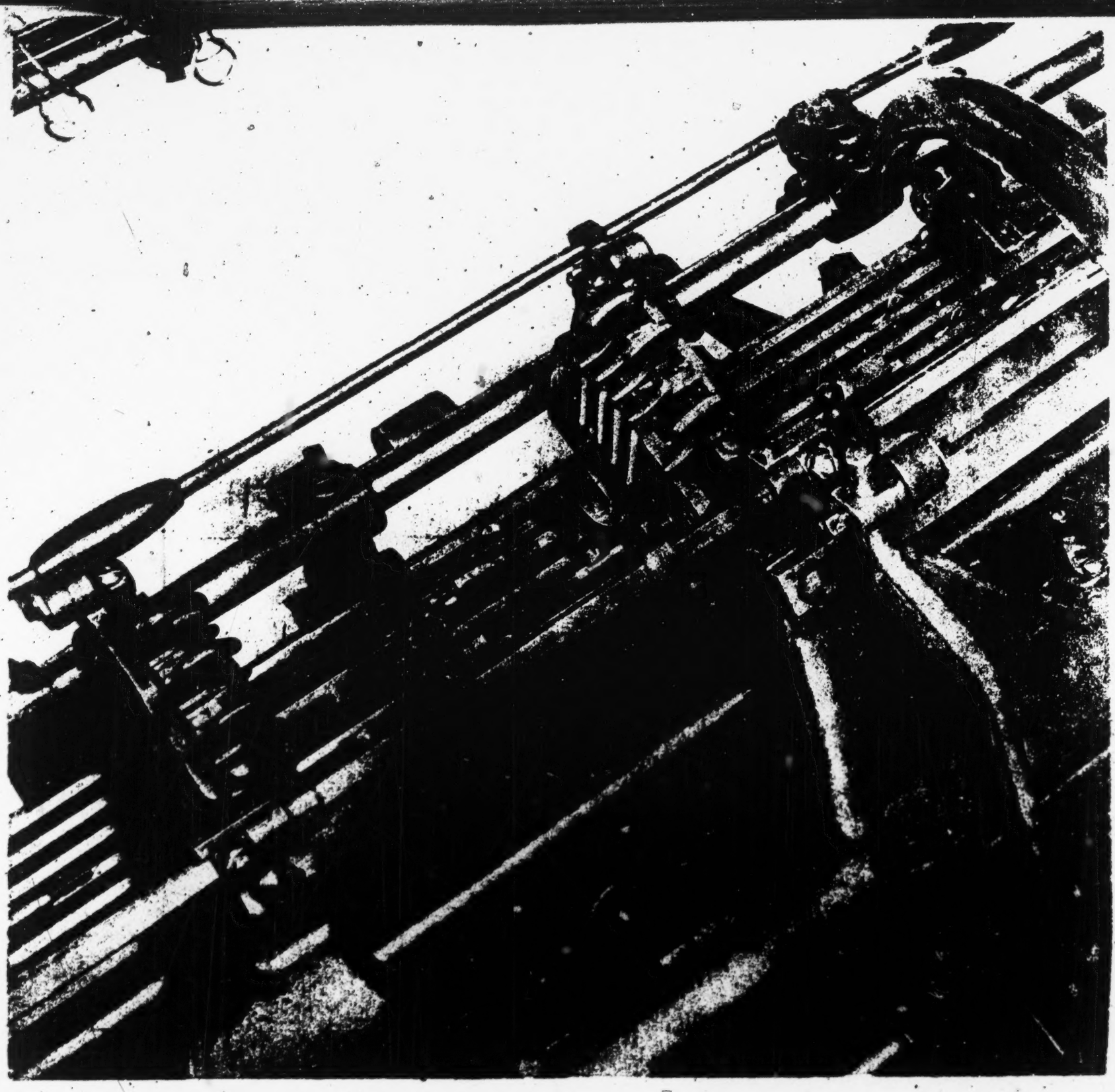

Full-Fashioned knitting machines equipped with the READING 3-Carrier Alternating Attachment and intended for making a cotton sole and cotton cradle foot can now be provided with the READING 2-Needle Closed Split Attachment. This device (patent applied for) eliminates the 4-needle overlap which causes a bulky line where sole and instep are joined. Write for particulars.

TEXTILE MACHINE WORKS • READING, PA.

DEFENDANT'S EXHIBIT 580

DEFENDANT'S EXHIBIT D

M40. Reinforced Selvedge Attachment—Single Rocker

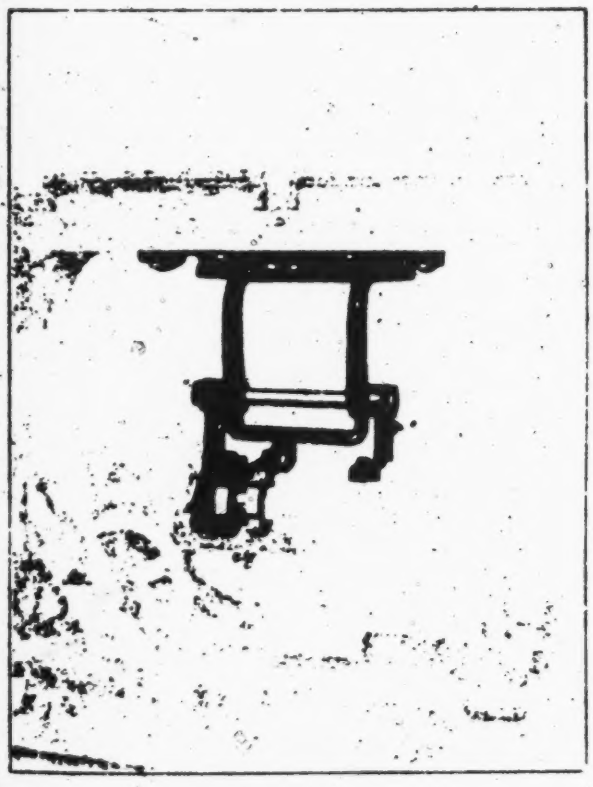

FRONT VIEW

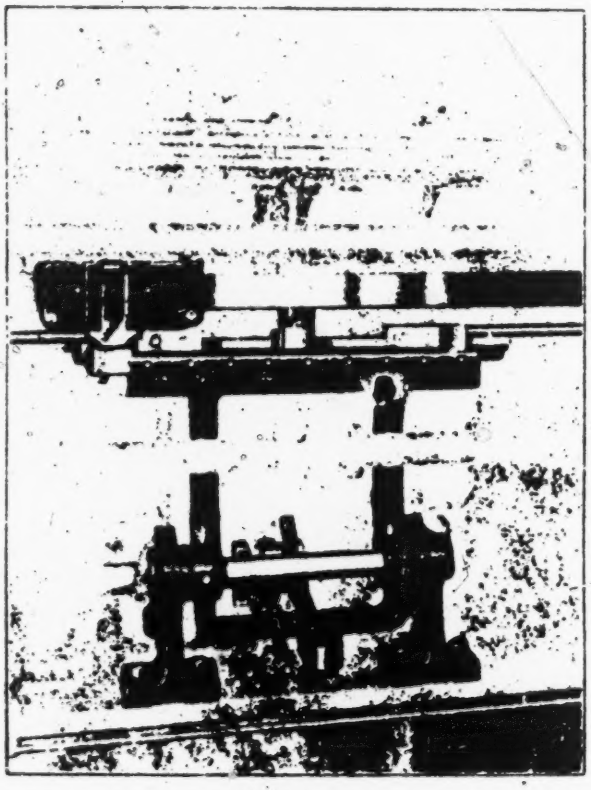

REAR VIEW

In the manufacture of full-fashioned stockings having a pointed heel reinforcement or reinforcement in which the edges make an angle with the wales of the fabric it is absolutely essential that means be provided on the machine to furnish a variable rocking motion to the Regulating Shaft as the reinforcement is widened or narrowed. If this is not done the fabric will be drawn or puckered wherever a reinforcing thread is added. Where no rocking is done the loops are not large enough to accommodate an extra thread, thus resulting in an unsatisfactory fabric.

The Rocking Motion for the "Reading" Reinforced Selvedge Attachment is furnished by a device that is operated directly from the Coulier Motion. This means that the Rocker Motion is always in synchronism with the Carrier travel and insures absolute accuracy as regards duration of rocking.

The necessary oscillating motion is given to the Regulating Shaft by the action of a cam-piece, which when coming between the Rocker Cradle and the movable rocker slides, produces the desired movement. Accuracy of rocker slide movement at all times is assured because they are connected to the Reinforced Selvedge Narrowing Nuts by means of steel rods, and are always moved in synchronism with the nuts. Thus it is seen that every time the nuts receive a movement to increase or decrease the reinforcing carrier travel the duration of the rocking motion is increased or decreased the same amount and at the same time.

"Reading" Rocker Motions used in connection with the Reinforced Selvedge Attachment insure excellent and satisfactory fabric at all times and under all circumstances.

[fols. 582-591] DEFENDANT'S EXHIBIT E

Dec. 5, 1933. G. BITZER 1,938,207

CARRIER ROD CONTROL FOR SPLIT SEAM FABRIC

Filed May 28, 1931 5 Sheets-Sheet 1

Fig. 1.

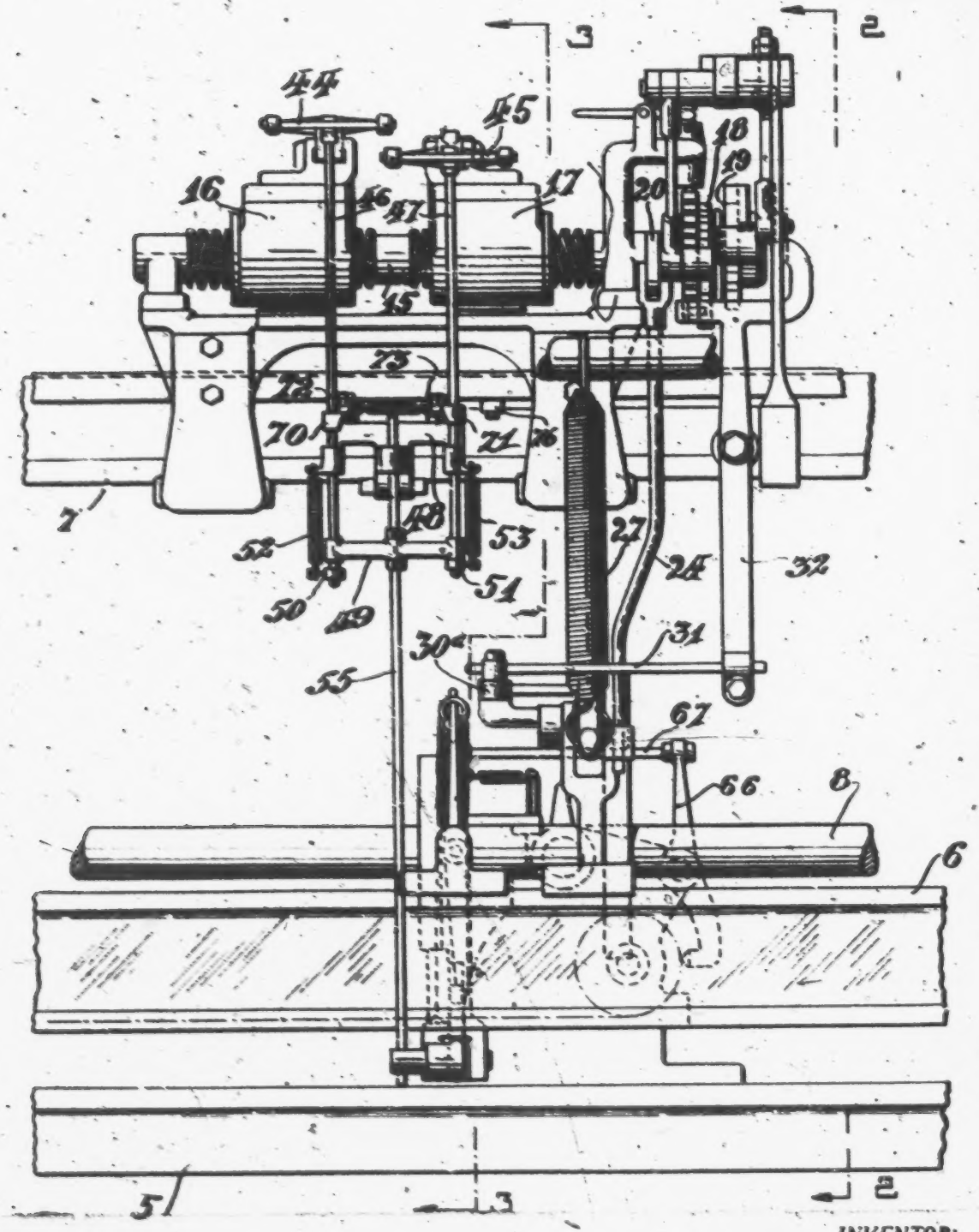

INVENTOR:
Gottlob Bitzer.
BY
ATTORNEYS.

Dec. 5, 1933. G. BITZER 1,938,207

CARRIER ROD CONTROL FOR SPLIT SEAM FABRIC

Filed May 28, 1931 5 Sheets-Sheet 2

FIG. 2.

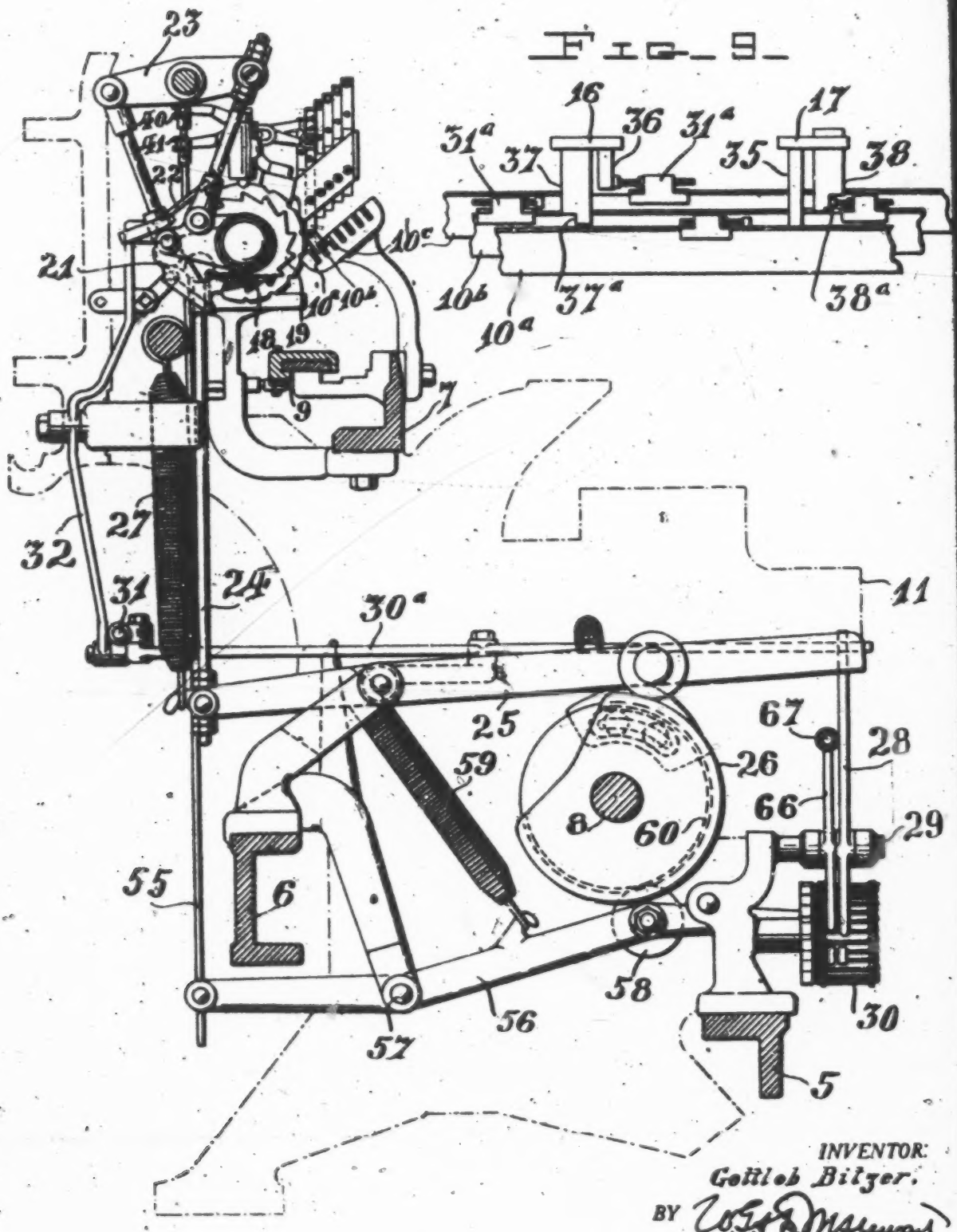

FIG. 9.

INVENTOR:
Gottlob Bitzer.
BY W. G. & L. M. Stewart
ATTORNEYS.

434

Dec. 5, 1933. G. BITZER 1,938,207

CARRIER ROD CONTROL FOR SPLIT SEAM FABRIC

Filed May 28, 1931 5 Sheets-Sheet 3

FIG. 3.

FIG. 4.

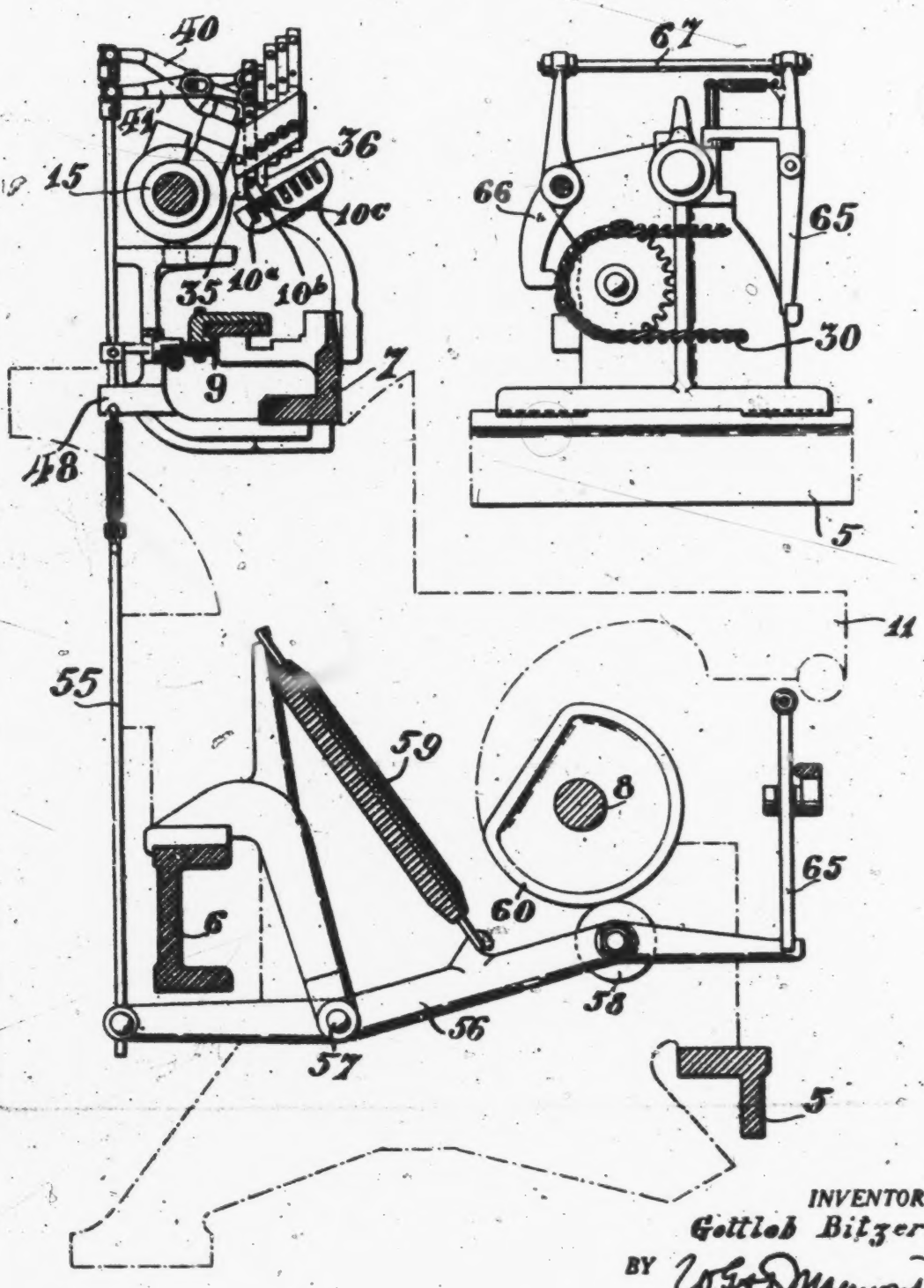

INVENTOR:
Gottlob Bitzer.
BY
ATTORNEYS.

435

Dec. 5, 1933. G. BITZER 1,938,207

CARRIER ROD CONTROL FOR SPLIT SEAM FABRIC

Filed May 28, 1931 5 Sheets-Sheet 4

Fig. 5.

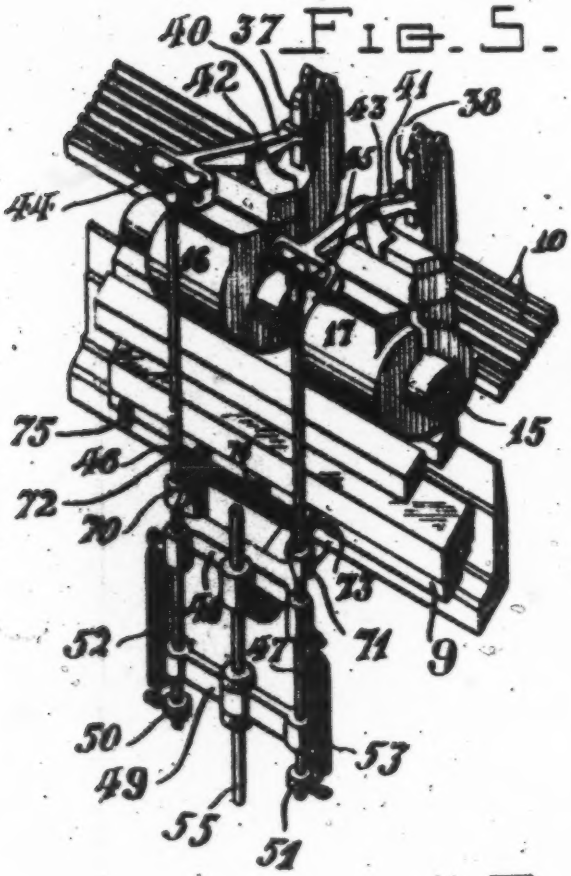

Fig. 6.

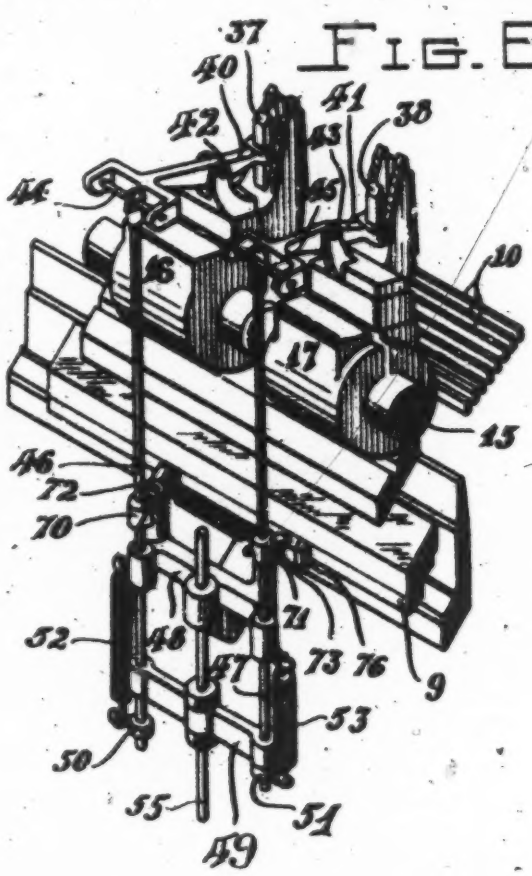

Fig. 7.

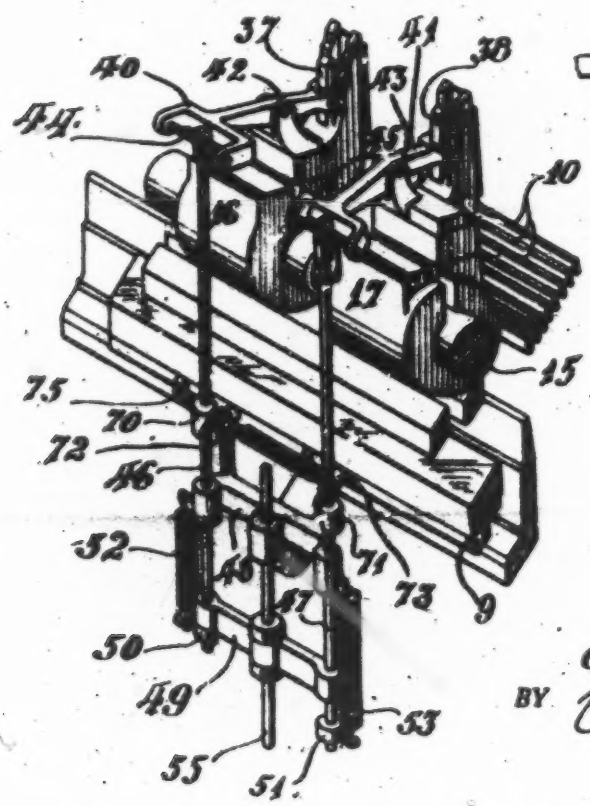

Fig. 8.

INVENTOR:
Gottlob Bitzer,
BY
ATTORNEYS.

436

Dec. 5, 1933. G. BITZER 1,938,207

CARRIER ROD CONTROL FOR SPLIT SEAM FABRIC

Filed May 28, 1931 5 Sheets-Sheet 5

FIG. 11

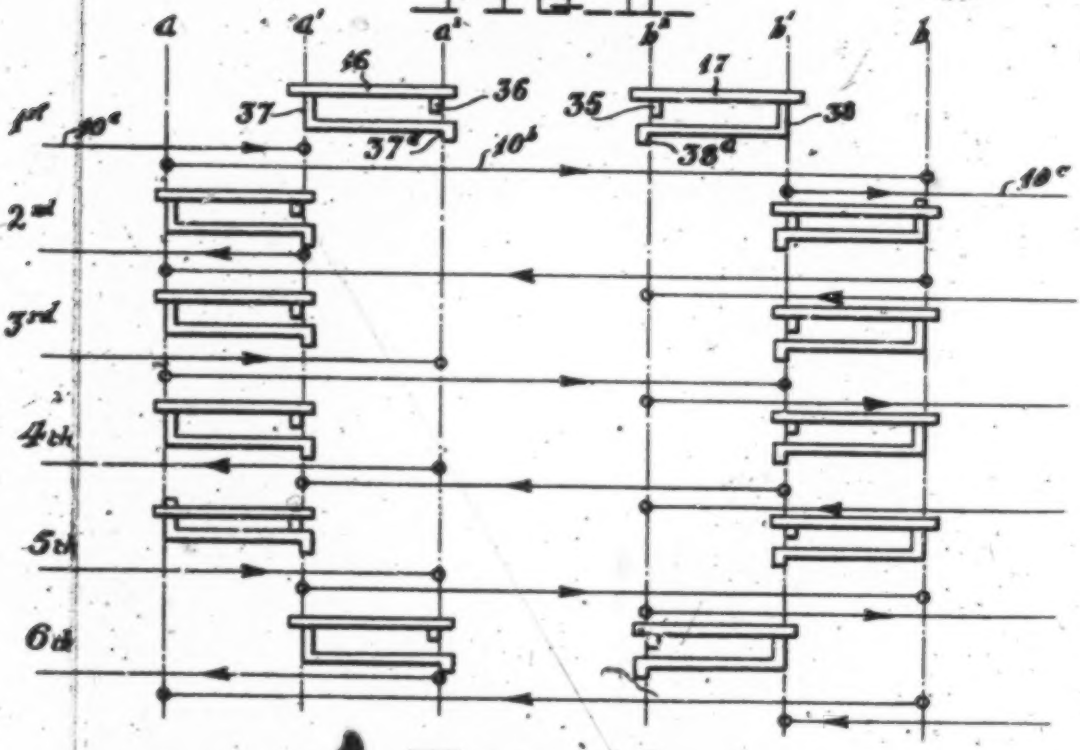

FIG. 10

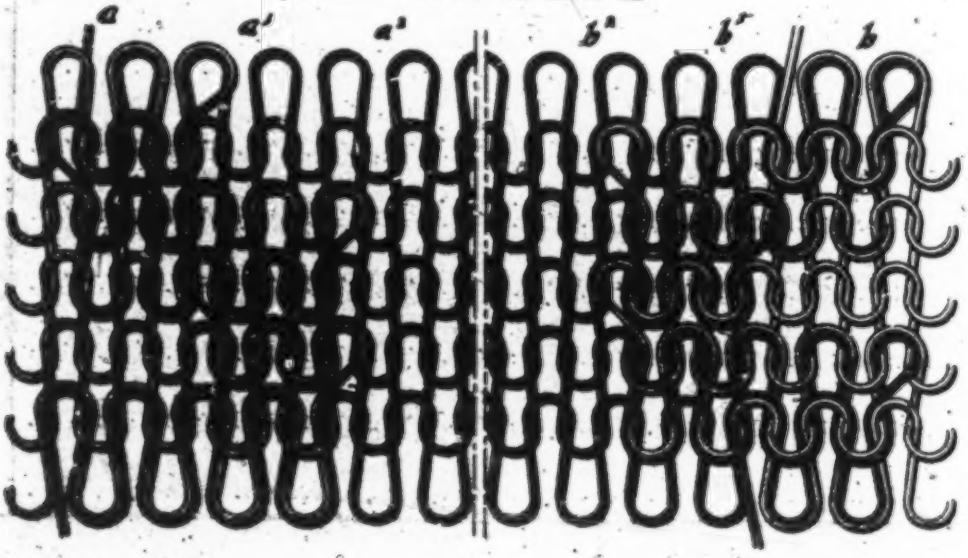

INVENTOR:
Gottlob Bitzer.
BY
ATTORNEYS.

Patented Dec. 5, 1933 1,938,207

UNITED STATES PATENT OFFICE

1,938,207

CARRIER ROD CONTROL FOR SPLIT-SEAM FABRIC

Gottlieb Bitzer, Wyomissing, Pa., assignor to Textile Machine Works, Wyomissing, Pa., a corporation of Pennsylvania

Application May 23, 1931. Serial No. 540,524

11 Claims. (Cl. 66—123)

My invention relates to new and improved means for controlling the thread feeding traverse of the guide carriers of a full fashioned knitting machine having rod stop devices jointly shiftable from or toward one another for varying in successive courses the number of needles receiving such thread.

Such stop devices are old and well known and commonly employed for specific purposes as widening and narrowing travel of the rods controlled thereby, and the main objects of my present improvements are to adapt such stops for the production of well known sectional or split fabrics of varying section widths and to insure the formation of suture seams of determined loop construction uniting the irregular section edges.

With the above main objects in view my invention comprises the improved mechanism and its automatic operative control as fully described in connection with the accompanying drawings, the novel features thereof being specifically set forth in the appended claims.

Fig. 1 shows in rear elevation a preferred embodiment of my invention as applied to a usual full fashioned knitting machine, the latter being sufficiently illustrated by indication of certain of its well known parts.

Fig. 2 is a cross sectional view on the line 2—2 of Fig. 1, indicating additional parts of such known knitting machine.

Fig. 3 is a cross sectional view, similar to Fig. 2 but taken on the line 3—3 of Fig. 1.

Fig. 4 is a front elevation of the lower portion of the mechanism shown in Fig. 1.

Figs. 5, 6 and 7, are similar perspective detail views showing respectively three different positions of the nut-carried rod engaging slides determined by slur cock bar action on their control mechanism.

Fig. 8 is an enlarged showing of the latch mechanism actuated by the slur cock bar.

Fig. 9 is a fragmentary detail of the carrier rods and their engaging slides, indicating the off-set extensions of certain of the latter.

Fig. 10 is a fragmentary showing of a sectional fabric produced by my improvements, the loops being greatly enlarged to show their interengagement.

Fig. 11 is a diagrammatic showing of the carrier rod movements in successive courses corresponding with the several courses of the fabric shown in Fig. 10.

The drawings indicate a straight or full-fashioned knitting machine of usual construction and well known operation sufficiently disclosed for the purposes of the present improvements by showing its front beam 5, back beam 6, center bed 7, main cam shaft 8, slur-cock connecting bar 9 and carrier rods 10, all supported on or mounted in a series of frame members 11 (dotted outline). The operation of the machine is as heretofore, cam shaft 8 imparting determined movements, one of which is the reciprocative traversing of slur-cock connecting bar 9, and the latter through known friction box connecting means, not shown, coincidentally traverses determined carrier rods 10, except as said rods individually engage adjustably positioned movement-arresting stop nut slides to vary the number of needles to which their thread is fed, as usual and readily understood.

Sectional or split-seam fabrics are commonly produced on such known machine by employing several carrier rods with their resting stop slides so set that successive portions of each needle series receives a different thread, and the several sections thus formed are united by overlapping feed on adjacent section needles producing suture seams as heretofore, the nature of such seams depending as usual on the stop feed control of the several rods.

The sectional fabric shown in Fig. 10 is of the above general nature, the knitted loops being greatly enlarged to show their construction, and the three sectional areas having varying widths with two uniting sutures inclined across the wales and preferably of the known closed seam type formed by a normal overlapping on two needles.

My invention as above stated relates to improved automatic control of the several rods employed in making sectional fabrics, and the particular construction of the drawings is adapted to produce the specific fabric shown in Fig. 10, as will now be fully described.

As a convenient means suitable for my present improvements, I preferably employ, as shown, a reversely threaded spindle 15 mounting jointly but reversely movable stop nuts 16 and 17 carrying as shown provision for a number of movably positioned rod stop slides adapting it for a variety of purposes as commonly desirable. Such spindle and its selective intermittent reverse rotations are not in themselves new and may be readily understood by the following brief description. Spindle 15 carries a pair of reversely toothed gears 18 and 19 and a freely swinging arm 20 mounting a pair of pawls 21 and 22 so linked to a cross arm 23 that movement of one pawl into engagement with its respective gear disengages the other

pawl from its gear, providing for selected racking of spindle 15 by swinging of arm 20 as readily understood. Arm 20 is swung through a connecting link rod 24 by lever 25 acted on by a cam 26 on main cam shaft 8, except as said lever is held in raised position against its tensioning spring 27 by a catch lever 28 pivoted at 29 and freed by a suitable button on usual pattern chain 30 of the knitting machine. Extra high freeing buttons move catch lever 28 sufficiently to swing transversely a lever 30ª, pivotally carried on lever 25, with a link connection 31 to a lever 32 arranged to swing cross arm 23 in selectively positioning a pawl 21 or 22.

It will be readily seen that the above described known step mute in connection with usual end stops, not shown, may be readily employed to control the individual traverse of the three carrier rods required to feed the three separate threads of the fabric shown in Fig. 10, and to automatically vary the section widths thereof, as indicated, by proper position of suitable buttons on pattern chain 30. To form the closed seam sutures shown in the fabric of Fig. 10 however requires not only the normal setting of the slide stops to provide a two-needle overlap feed of the carrier rods, but in addition special construction and operative mechanism for the slide stops controlling the traverse movements of the carrier rod feeding the intermediate section of the fabric as will now be described.

In the drawings 16^a, 16^b and 16^c indicate the three guide rods employed, provided with suitably fixed dogs 21^a (Fig. 9) each adapted to engage its respective slide stop in rods 16 and 17, and the rods 16^a and 16^c engage, as usual, end stops, not shown, to limit their outward travel as heretofore. Rod 16^a travels between its usual end stop and engagement of its dog with the inner face of its slide stop 35 in rod 17; and in similar manner rod 16^c travels between its end stop and engagement of its dog with the inner face of its slide stop 36 in rod 16. Intermediate rod 16^b is provided with two dogs, as shown, which normally limit its travel by engaging the outer faces of special slide stops 37 and 38 carried in the respective rods 16 and 17, but, when the latter are raised as will be described later herein, engage instead the two-needle off-set extensions 37^a and 38^a of said stops. It will be understood that the respective end and slide stops will be so set that the normal rod travel above described will provide for a two needle overlap feed required for the closed seam suture shown, except as rods 16 and 17 are shifted, when the additional two needle travel, provided by slide stop extensions 37^a and 38^a, are employed for rod 16^b. And it will be readily understood that with the special dogs 21^a, 21^a, thereof engaging the outside faces of slides 37 and 38 in rods 16 and 17, a closing together of said rods will increase the respective traverse of said rod, thus increasing the number of needles fed thereby to widen the fabric, and a separation of said rods will reduce the number of needles supplied with thread to narrow the fabric. And the rods 16^a and 16^c engaging the inner faces of their respective stops 35 and 36 will correspondingly vary the number of needles fed thereby, with a normal overlap feed of two needles of those supplied with thread from rod 16^b.

Such normal over-lap feed of two needles is effective except as the rods 16 and 17 are shifted to vary the needle feed of the respective rods, when additional travel of two needles for the rod 16^b is required, as will be clearly set out later herein in connection with description of diagrammatic Fig. 11. And, as shown in the drawings, this extra feed is provided by vertical lift of the nut slides 37 and 38 to bring off-set faces 37^a and 38^a in position to engage dogs 21^a, 21^a. The controlled lift of said slides 37 and 38 is preferably effected as follows:

As clearly seen in the drawings, the special slide stops 37 and 38 have pins at their upper ends engaging the forked ends of their respective shifting levers 40 and 41, each pivotally mounted at 42 and 43 on its particular nut 16 and 17, and each lever preferably having, as shown, a slotted engagement with its pivot pin to permit disengagement with its stop slide when desired. The opposite ends of each lever 40 and 41 are widely forked as shown, with connecting rods 44 and 45 each forming a slide connection for the hooked end of its respective operating rod 46 and 47. The rods 46 and 47 are mounted to vertically slide in the special bearings of frame carried bracket 48 and end bearings of a yoke arm 49, and each rod carries a fixed collar 50, 51, tensioned by a spring 52, 53 to normally maintain it in vertically shifted position with said collar seated against its rod bearing in yoke 49. Yoke 49 is connected by a rod 55 to the end of a lever 56 pivoted at 57 and its opposite end carrying, as shown, an anti-friction roller 58 normally held by spring 59 in contact with a cam 60 on main cam shaft 8. A low portion of cam 60 permits spring 59 to swing lever 56 to lower rod 55 which it will be readily seen causes shifting levers 40 and 41 to raise slide stops 37 and 38. A latch lever 65 controlled, as shown by a button on pattern chain 30, through lever 66 and connecting rod 67, determines the times of the cam operation to raise slide stops 37 and 38.

As more clearly seen in Figs. 5 to 8, each rod 46 and 47 carries a fixed collar 70 and 71, engaged by spring joined latches 72 and 73 pivotally mounted on bracket 48. Said latches operate to hold their respective rods in lowered positions to which they are moved by lever 56, against the tension of rod springs 52 and 53 each adapted to reversely move its respective rod on release of its individual latch. Each latch, as shown, has an extension 72^a and 73^a fully movable in one direction, but when moved in the reverse direction swinging its latch 72 or 73 free of engagement with its rod collar 70 or 71. Slur cock connecting bar 9, or an integral extension thereof is shown as carrying fixed projections 75 and 76 which are adapted to contact with the respective latch extensions 72^a and 73^a to release their respective latches 72 and 73 during reverse movements of said bar 9.

The action of a properly set button on pattern chain 30, it will be seen, frees lever 56 for operation of cam 60, said lever moving downward and, through rods 55, 49, moves downward rods 46 and 47 to swing levers 40 and 41 causing them to raise their slide stops 37 and 38 to bring offsets 37^a and 38^a into the line of travel of dogs 21^a on carrier rod 16^b. When rods 46 and 47 are thus moved downward, latches 72 and 73 engage against collars 70 and 71 and prevent springs 52 and 53 from reversely moving said rods after lever 56 is again held in inoperative position by latch 65. Each latch 72 and 73 is disengaged by its slur cock projection 75 or 76 to free its rod, when said rod springs act to swing their respective levers 40 or 41 to relower the slide stop 37 or 38 for normal action of the latter. The necessity of the raising of slide stops 37 and

38 to effect an additional feed of its carrier rod 10^b, and the further requirement for separate lowering of said stops as above described, will be best understood in connection with the diagrammatic Fig. 11 and the following description of the same.

In Fig 11, the horizontal lines indicate the thread feed traverse of the several rods 10^a, 10^b and 10^c in successive courses corresponding with the successive courses of the fabric shown in Fig. 10; the arrow heads on said horizontal lines indicating their direction of travel in each course; and the vertical dotted lines the spacing of two needle shifts by which steps the nuts 16 and 17 are moved and the traverse of rod 10^b increased when its slide stops 37 and 38 are raised. Keeping in mind that the stop nuts 16 and 17 are moved apart to effect narrowing of the middle fabric section, and brought together to widen said fabric section; and that the stop slides for the rods 10^a and 10^c are set with relation to special stop slides 37 and 38 to cause a normal overlap feed of two needles, the traverse of the several courses is as follows:

In the first course rod 10^a travels from its end stop to the inner face of its stop 35 in nut 17 feeding its thread to the vertical line a', rod 10^b travels to the outside of its special stop 37 in nut 16 feeding its thread from line a to line b, and rod 10^c travels to its end stop, a normal two-needle overlap feed occurring between the lines a—a' and b'—b. In the second course the spindle 15 has been turned through a pattern chain button action to spread the stop nuts two needles, the rod 10^c will now travel two needles further to contact with its slide 36 in nut 16, feeding its thread to the vertical line b^2, rod 10^b would travel normally two needles less, due to outward movement of its slide 38 in nut 17, but a button on pattern chain 30 has acted to free lever 56 from its latch 65, and cam 60 has operated on said spring tensioned lever 56 to cause it to lift the slide stops 37 and 38 to bring their offset extensions 37^a and 38^a in action, thus rod 10^b will travel an extra two needles feeding its thread to the vertical line a instead of a', and rod 10^a will travel to its end stop, this feeding causing an overlap of four needles on the right due to the widening shift of the stop nuts, and a normal overlap of two needles at the left. The slur cock projection 75, which travels equally with the carrier rods 10, acts in this course to free latch 72 thus lowering slide 37, while slide 38 remains raised to be normally lowered on reverse movement of said slur cock connecting bar 9 by its projection 76 contacting to free latch 73. In the third course shown the spindle has remained at rest and slide 38 lowered to normal stopping position, rod 10^a will now travel two needles more due to shift outward of its slide 35, or to the line a^2; rod 10^b will travel from line a to line b'; two needles less than its previous travel, and rod 10^c will travel from line b^2 to its end stop; this travel causing a four needle overlap at the left and a normal two needle overlap at the right. In the fourth course shown the spindle has not been turned. In this course rod 10^c travels from its end stop to line b^2 as its stop has not been changed; rod 10^b travels from line b' to line a'; rod 10^a travels from line a^2 to its end stop; this feed causing a normal two needle overlap at the right and a normal two needle overlap at the left. In the fifth course the spindle has not been turned but both slides 37 and 38 have been raised to place the off-sets 37^a and 38^a in rod stopping position, slide 38 however being returned to normal during this course; rod 10^a travels from its end stop to line a^2 as in the third and fourth courses; rod 10^b travels from line a' to line b, which is two needles more than normal due to its offset stop 37^a acting; rod 10^c travels from line b^2 to its end stop; the feeding described causing a normal two needle overlap at the left and a four needle overlap at the right. In the sixth course shown, the spindle has been turned to move stops 16 and 17 inward two needles each, and slide 37 has been returned to normal. In this course rod 10^c will travel from its end stop to line b', two needles less; rod 10^b travels from line b to line a, two needles further than in the fourth and fifth courses because of inward movement of stop 38; rod 10^a travels from line a^2 to its end stop; in this course a normal overlap of two needles occurring at the right and a four needle overlap at the left due to the two needle additional feed of rod 10^b.

It is thought that this diagrammatic showing will make clearer the action of the mechanism previously set forth. In turning the spindle to move the stops 16 and 17 apart, the slides 37 and 38 may be raised at the same time to bring into action their off-set portions 37^a and 38^a, one being immediately returned to normal and the other returned to normal in the next course. In turning the spindle to move the stops toward each other, the slides 37 and 38 are first raised so that rod 10^b may move additionally two needles, the slides are then returned to normal and the spindle rotated to close the nuts 16 and 17.

The narrowing and widening changes are ordinarily effected in separated course with normal overlap courses with the previous setting of the stop; and it will be noted that in narrowing the intermediate fabric effected through stops 37^a, 38^a, the added overlap in the sutures occurs immediately in the narrowed course; but that in widening this added overlap by means of 37, 38 occurs in a course immediately before that in which the change in the rod feed is effected by shifting of the nuts 16, 17.

While the suture shown is of the construction commonly known in the art as a closed seam, it is readily conceivable that by delaying the raising of the slides 37 and 38 until the rod 10^b has come to a preliminary rest against them, a delayed two needle feed may be secured by additional movement of said rod to their off-sets 37^a and 38^a, which would produce a usual open seam suture.

From the foregoing description of one specific embodiment it is believed the nature and operation of my improvements will be readily understood, and it is obvious that changes and modifications may readily be devised within the spirit of my invention as defined in the following claims.

What I claim is:

1. In a full fashioned knitting machine having a plurality of reciprocatively traversed thread carrier rods each adapted to feed a separate thread to a different section of needles with overlap joint feeding on end needles of said sections, and stop devices for said rods simultaneously movable from and toward one another to vary in successive courses the number of sectional needles fed by the respective rods, of pattern-controlled means for temporarily varying the

stops for one of said rods, and means operated by said rod traverse mechanism for selectively returning said stops to normal position.

2. In a full fashioned knitting machine, a sectional fabric forming mechanism comprising, a plurality of reciprocative carrier rods adapted to feed their sectional threads to a series of needles, rod stop carrying devices simultaneously movable from and toward each other to vary the fabric section widths, rod-engaging stops in said carriers movable in one direction to vary the positions of their rod engagements, pattern controlled mechanism for moving said stops, and means actuated by the rod reciprocative mechanism for selectively moving said stops in the opposite direction.

3. In a full fashioned knitting machine, a sectional fabric forming mechanism comprising, a plurality of reciprocative carrier rods adapted to feed their sectional threads to a series of needles, rod stop carrying devices simultaneously movable from and toward each other to vary the fabric section widths, rod stops in said carriers having normal and variable rod-engagements selectively positionable, pattern controlled mechanism for cooperatively moving said carriers from and toward one another and for positioning said rod stop variable engagements, and means actuated by the rod-reciprocative mechanism for selectively restoring the normal rod stop engagements.

4. In a full fashioned knitting machine, a sectional fabric forming mechanism comprising, a plurality of reciprocative carrier rods adapted to feed their sectional threads to a series of needles, rod stop carrying devices simultaneously movable from and toward each other to vary the fabric section widths, stepped rod-engaging slides in said carriers, pattern controlled mechanism for selectively moving determined steps into rod-engaging position, and means actuated by the rod-reciprocative mechanism for changing the step engagements of said slides.

5. In a full fashioned knitting machine, a sectional fabric forming mechanism comprising, a plurality of reciprocative carrier rods adapted to feed their sectional threads to a series of needles, rod stop carrying devices simultaneously movable from and toward each other to vary the fabric section widths, stepped rod-engaging slides in said carriers, pattern-controlled mechanism for simultaneously moving said slides to position determined rod-engaging steps thereof, and means actuated by the rod reciprocative mechanism to selectively reposition said slides.

6. In a full fashioned knitting machine, a sectional fabric forming mechanism comprising, a plurality of carrier rods adapted to feed their sectional threads to a series of needles, rod stop nuts movable from and toward one another to vary the fabric section widths, rod-engaging stop slides in said nuts having off-set rod engaging extensions, pattern controlled mechanism for moving said off-set extensions into rod-engaging positions, and means actuated by the rod reciprocative mechanism for moving said slide extensions from rod engaging positions.

7. In a full fashioned knitting machine, a sectional fabric forming mechanism comprising, a plurality of carrier rods adapted to feed their sectional threads to a series of needles, rod stop nuts movable from and toward one another to vary the fabric sectional widths, rod-engaging stop slides in said nuts having off-set rod engaging extensions, pattern controlled mechanism for moving said off-set extensions into rod-engaging positions, latch means for retaining said slides in off-set position, and latch releasing means operated by the rod-reciprocative mechanisms.

8. In a full fashioned knitting machine, a sectional fabric forming mechanism comprising, a plurality of carrier rods adapted to fed their sectional threads to a series of needles, rod stop nuts movable from and toward one another to vary the fabric section widths, rod-engaging stop slides in said nuts having off-set rod engaging extensions, pattern controlled mechanism for moving said off-set extensions into rod-engaging positions, latch means for retaining said slides in off-set position, and means for releasing said latches separately in successive reciprocations of the carrier rods.

9. In a full fashioned knitting machine, a sectional fabric forming mechanism comprising, a plurality of carrier rods adapted to feed their sectional threads to a series of needles, a reversely threaded spindle, stop nuts reversely movable on said spindle, a rod-engaging stop slide in each nut having an off-set rod-engaging extension, mechanism to raise said slides to position said off-set extensions in rod engaging position, pattern controlled mechanism for raising said slides to position said off-set extensions, and means operated by the rod reciprocating mechanism for relowering said slides.

10. In a full fashioned knitting machine, a sectional fabric forming mechanism comprising, a plurality of carrier rods adapted to feed their sectional threads to a series of needles, a reversely threaded spindle, stop nuts reversely movable on said spindle, a rod-engaging stop slide in each nut having an off-set rod-engaging extension, mechanism to raise said slides to position said off-set extensions in rod engaging position, pattern controlled mechanism for raising said slides to position said off-set extensions, latches for holding said slides in raised positions, and latch releasing means selectively operated in successive carrier rod reciprocations.

11. In a full fashioned knitting machine, a sectional fabric forming mechanism comprising, a plurality of carrier rods adapted to feed their sectional threads to a series of needles, a reversely threaded spindle, stop nuts reversely movable on said spindle, a rod-engaging stop slide in each nut having an off-set rod-engaging extension, mechanism to raise said slides to position said off-set extensions in rod engaging position, pattern controlled mechanism for turning said spindle and raising said slides jointly to position their off-set extensions, latches for holding said slides in raised positions, and carrier rod actuated mean for relowering said slides separately in successive courses.

GOTTLOB BITZER.

March 25, 1930. R. E. SCHLETTER 1,752,206

ATTACHMENT FOR FLAT KNITTING MACHINES

Filed July 25, 1928 4 Sheets-Sheet 1

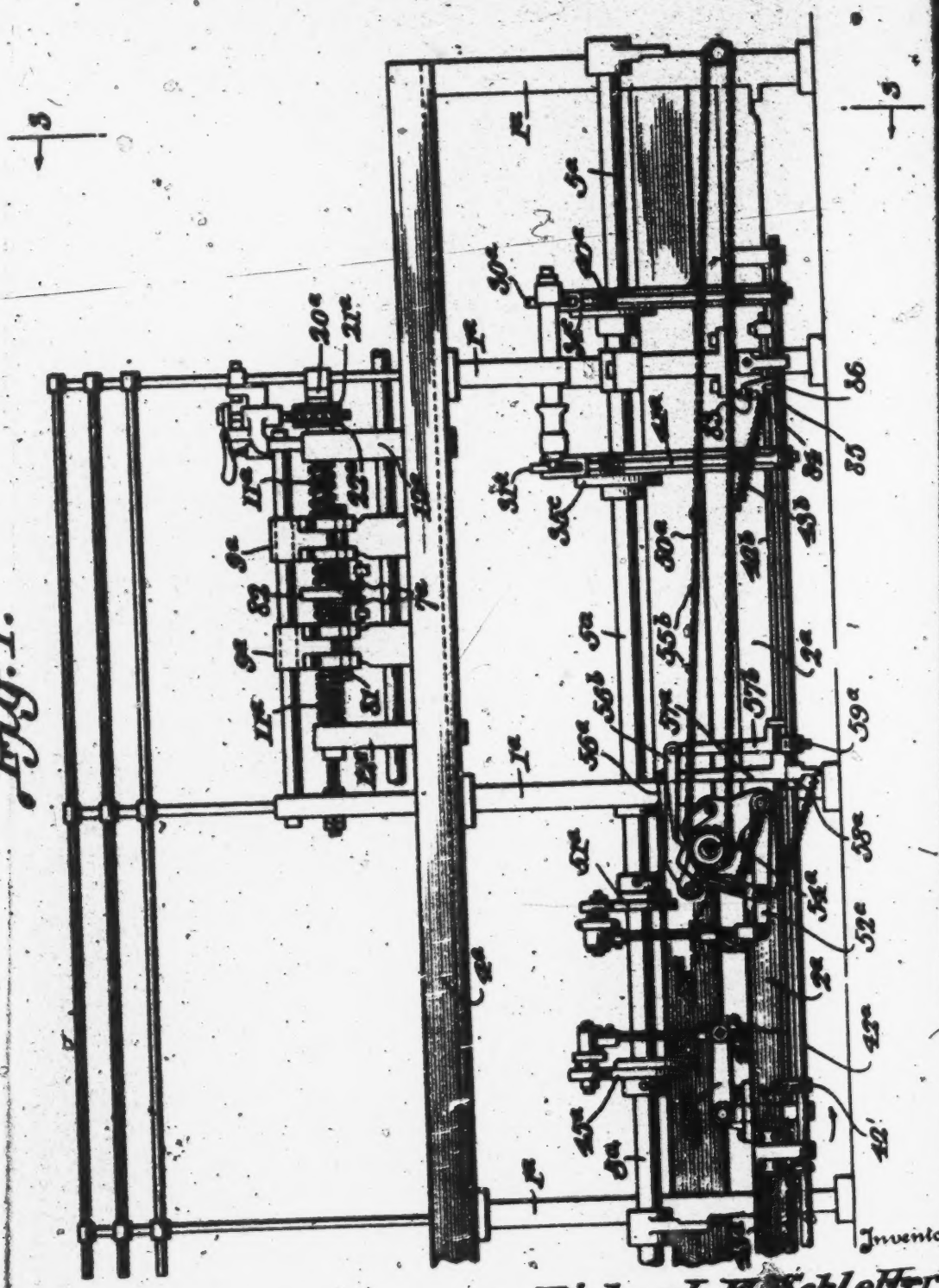

Fig. 1.

Inventor
Richard E. Schletter
By A. W. Dahm,
Attorney

March 25, 1930. R. E. SCHLETTER 1,752,206

ATTACHMENT FOR FLAT KNITTING MACHINES

Filed July 25, 1928 4 Sheets-Sheet 2

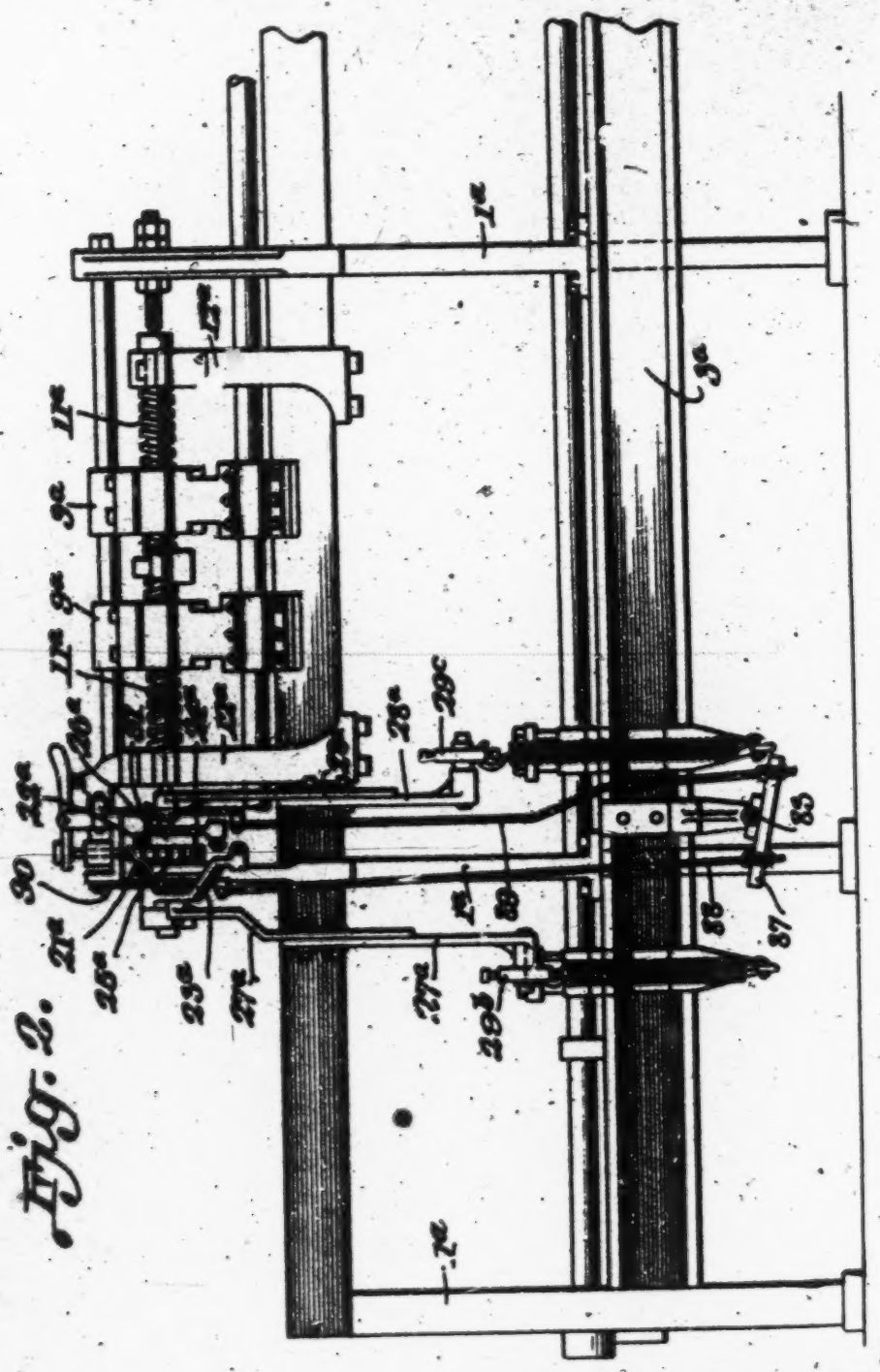

Fig. 2.

Inventor
Richard E. Schletter

By R. W. Dahw.

Attorney

444

March 25, 1930. R. E. SCHLETTER 1,752,206

ATTACHMENT FOR FLAT KNITTING MACHINES

Filed July 25, 1928 4 Sheets-Sheet 3

Fig. 4.

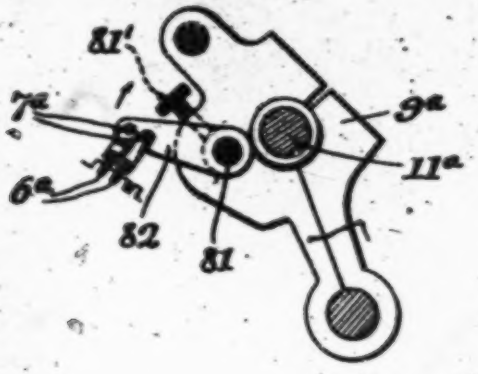

Fig. 3.

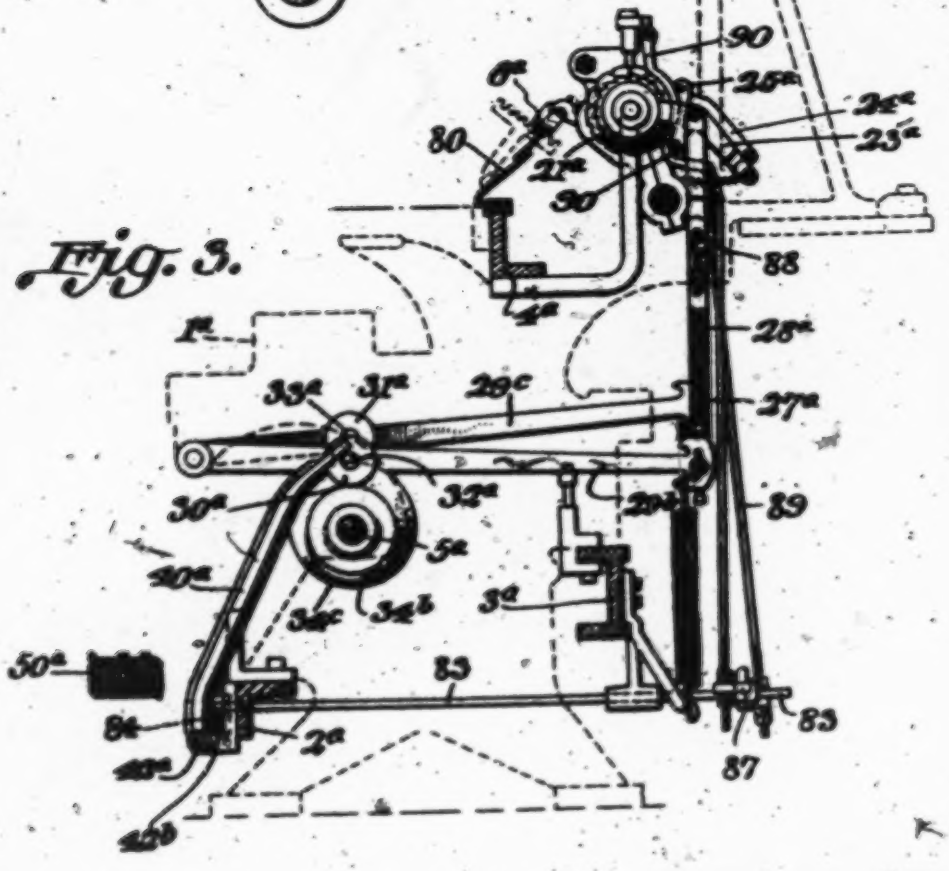

Inventor

Richard E. Schletter

By P. W. Dorsey,

Attorney

445

March 25, 1930. R. E. SCHLETTER 1,752,206

ATTACHMENT FOR FLAT KNITTING MACHINES

Filed July 25, 1928 4 Sheets-Sheet 4

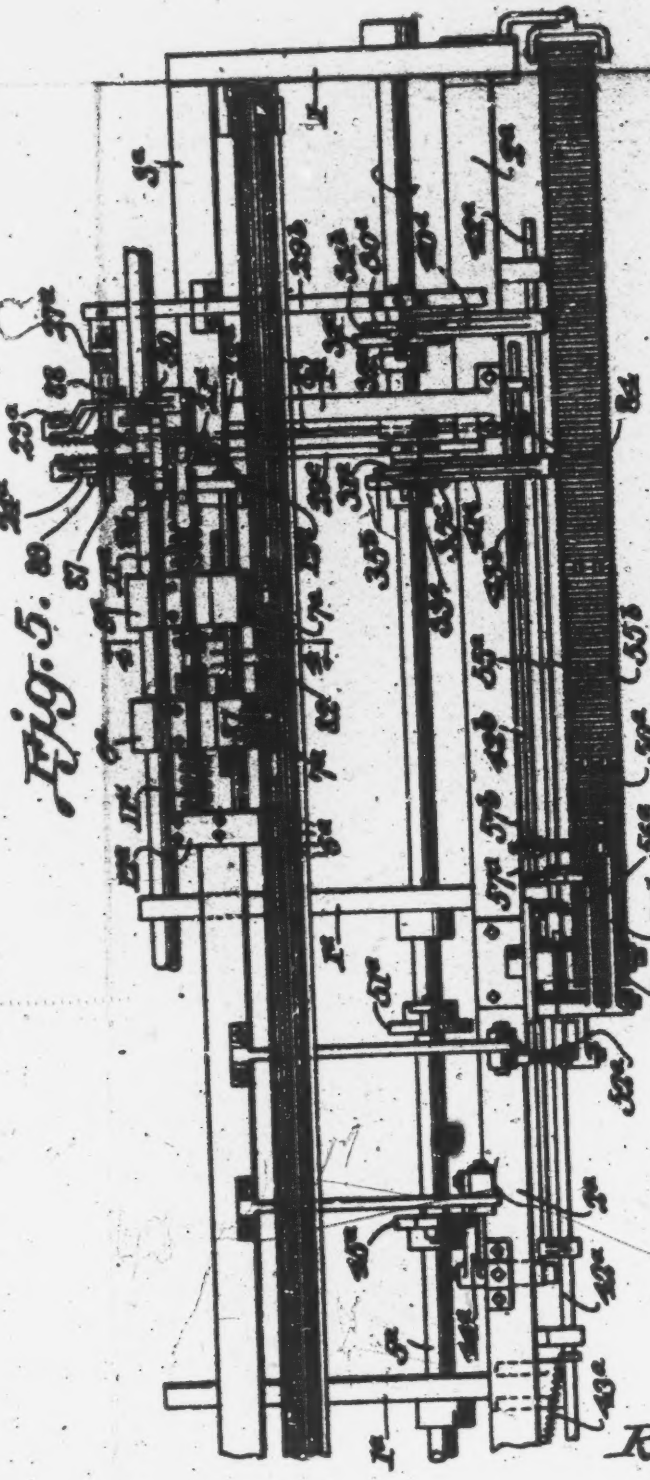

Fig. 5.

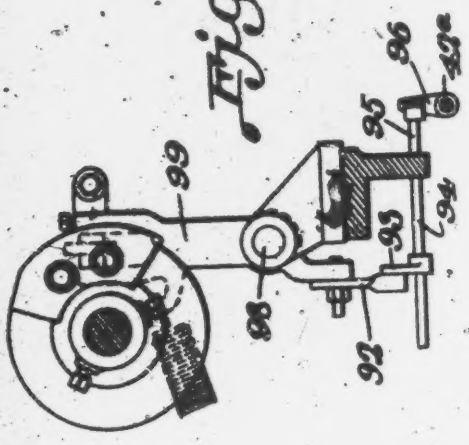

Fig. 7.

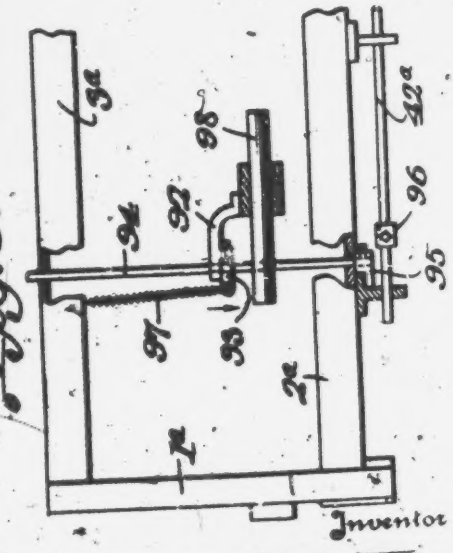

Fig. 6.

Inventor

Richard E. Schletter

By F. W. Dahm,

Attorney

Patented Mar. 25, 1930

1,752,206

UNITED STATES PATENT OFFICE

RICHARD R. SCHLETTER, OF PHILADELPHIA, PENNSYLVANIA, ASSIGNOR, BY MESNE ASSIGNMENTS, TO TEXTILE MACHINE WORKS, OF WYOMISSING, PENNSYLVANIA, A CORPORATION OF PENNSYLVANIA

ATTACHMENT FOR FLAT-KNITTING MACHINES

Application filed July 25, 1928. Serial No. 295,285.

My said invention relates to an attachment for flat knitting machines, the present application being in part a continuation of my application Serial No. 66,916, filed November 5, 1925, now Patent 1,713,628, May 21, 1929. It is an object of the invention to provide special stops for yarn-guide carrier rods that have a variable traverse, such as are used for making clocks, for split-seam work, etc. The structure herein shown has several advantages over that described in said patent the first of which is that in the present instance I require but one chain to operate both the ratchet mechanism and the reversing means therefor. Second, but one friction box is required in the present instance regardless of the number of auxiliary yarn carrier rods employed, while in the disclosure of the patent a separate friction box was required for each yarn carrier rod. These friction boxes utilize considerable power when in operation and the elimination of several of them aids materially in speeding up production, produces better work, necessitates less repairs to the machine, and the machine is easier to operate. Third, the parts are more positive in their action by means of the attachment about to be described.

Referring to the drawings, which are made a part of this application and in which similar reference characters indicate similar parts:

Fig. 1 is a front elevation of so much of the machine as is necessary to a showing of the invention,

Fig. 2, a rear elevation of the same,

Fig. 3, a vertical section on line 3—3 of Fig. 1,

Fig. 4 a detail of parts shown in Fig. 3, on an enlarged scale,

Fig. 5, a plan showing my attachment,

Fig. 6, a plan partly in section, of means to prevent a certain operation when the narrowing means is in operation, and

Fig. 7 is a fragmentary elevation, partly in section, showing parts seen in Fig. 6.

In the drawings the reference numeral 1^a indicates the main frame of a flat knitting machine, 2^a, the front beam; 3^a, the back beam; 4^a, the center bed; and 5^a, the main cam shaft. The numeral 80 designates the yarn carriers, mounted upon the usual longitudinally movable carrier rods 6^a, which latter are moved by the usual mechanism well known in this art. In Fig. 3 I have shown the second and third carrier rods, counting from the right, as operating splicing yarn guides with a variable stroke. Any one of the other rods may operate the guide for the body yarn with which the reinforcing yarns are interknitted, the travel of said rod being limited in any conventional or preferred manner, as by stops at the ends of the machine. In this disclosure of my invention, as in the foregoing showing, the novelty lies in the control of special stops for the several rods 6^a, limiting their path of travel, and thereby controlling the design. The nuts 9^a, 9^a in this case are the true rod-stops, and have the same function in this disclosure as in the showing in the application above referred to; i. e., determining the length of stroke of rods 6^a, and therewith the yarn carriers.

A right and left hand screw threaded spindle 11^a is journaled in bearings 12^a and carries thereon the nuts 9^a which in turn carry a supporting shaft 81 for the finger 82. Conventional abutment screws 7^a, 7^a are so located on the carrier rods that they can be made to engage the finger 82 at each side, whereby the finger and the shaft 81 will move with the carrier rod until stopped by a nut 9^a, the shaft being slidably mounted in nuts 9^a, 9^a, to permit endwise reciprocation of said shaft.

Fig. 5 shows two of the abutment screws backed off into idle position away from finger 82. Fig. 4, similarly shows a screw in full lines and another screw in dotted lines on the adjacent rod back of the finger 82. Fig. 1, shows two abutment screws on the same rod in operative position for engagement with the finger. Similar abutment screws on one or more other splicing yarn carrier rods enable me to secure them also to finger 82 for reciprocation with shaft 81 to the extent permitted by nuts 9^a, 9^a. The screw 11^a has an end extension 20^a fixedly

carrying oppositely toothed ratchet wheels 21ª and 22ª, and loosely strung arms 23ª and 24ª carrying spring controlled pawls 25ª and 26ª adapted to engage the respective ratchet wheels 21ª and 22ª, a notched rim and locking pin being employed as usual to prevent the accidental turning of the shaft 11ª. A pattern control chain 50ª hereinafter fully described, determines the [illegible] ment of the pawls, and the actuation of the connecting links 27ª and 28ª which are respectively connected to the loose arms 23ª and 24ª at their upper ends and to the levers 29ª and 29ª at their lower ends. These levers are pivoted at their forward ends to the main frame 1ª of the machine, and carry the rollers 30ª and 31ª, said rollers having a limited longitudinal movement on their respective lever carrier studs 32ª and 33ª and being adapted to ride upon special cams on the cam shaft 5ª, said cams having idle paths 34ª and 35ª and active paths 34ª and 35ª for the respective rollers all as in the form first described. Arms 40ª and 41ª are forked at one end and engage the rollers 30ª and 31ª respectively, and their opposite ends are attached to a horizontal shaft 42ª which extends practically the entire length of the machine. When motion is applied to the shaft 42ª by spring 43ª (Fig. 1) the arms 40ª and 41ª are caused to move and therewith the rollers 30ª and 31ª upon their respective lever carrier studs 32ª and 33ª from the idle paths of the cams on shaft 5ª to their operative paths 34ª and 35ª. A cam 45ª mounted on cam shaft 5ª, acting through the medium of a bell crank 44ª, returns the rod 42ª to the position shown in Fig. 1.

To automatically control the movement of this shaft 42ª, I employ the pattern chain 50ª, to which a step-by-step motion is imparted from cam shaft 5ª, through cam 51ª, and link connected lever 52ª, the latter having a pawl 53ª acting on the ratchet teeth of chain supporting wheel 54ª. Studs 55ª on the chain 50ª are adapted to act upon the lever 56ª carrying a shaft latch-member 57ª to raise and lower the latch. This latch 57ª slidably bears against a fixed shaft supporting bracket 58ª, and when in its lower position engages with its widest part between said bracket and a collar 59ª fixed on the shaft 42ª to temporarily hold the arms 40ª and 41ª in such position as to cause the rollers 30ª and 31ª to ride upon the idle portion of their respective cams, and when in its raised position the narrow lower end of the latch allows the shaft to move to the left to permit the said rollers to ride upon the active paths of the cams.

The raising of the lever 56ª and therewith the latch member 57ª is caused by the studs 55ª passing beneath the said lever. These studs are adjustable upon the pattern chain 50ª and the number of them controls the number of partial rotations of the screw shaft 11ª in one direction, while the distance between them controls the time between spindle movements and hence the distance between changes in the width of the ornamentation.

In order to impart movement to the screw shaft 11ª in a reverse direction, I employ a second set of studs 55ª mounted on the pattern chain 50ª [illegible] a latch 57ª hung from a lever 56ª. This latch 57ª is like latch 57ª and acts upon a shaft 42ª in like manner to the action of latch 57ª on shaft 42ª. Motion is imparted to the shaft 42ª by the small bell crank movement 44ª which imparts motion to the shaft 42ª, the shaft 42ª abutting against a bracket on shaft 42ª (Fig. 1) for this purpose. A shaft 83 (Figs. 1 and 3) extends across the machine from front to rear and carries on one end thereof an arm 84 having a forked end 85 straddling a pin 86 fixed to the shaft 42ª (see Fig. 1). A spring 43ª tends to move shaft 42ª to the left, holding it against latch 57ª or bracket 42′ on shaft 42ª. Studs 55ª and 55ª can be mounted side by side so as to cause both of the preceding described mechanisms to operate in unison or studs 55ª may be mounted so as to cause lever 56ª and therewith arm 57ª to operate independently, in which case a partial rotation of the shaft 83 is caused through the engagement of the forked arm 84 with the pin 86 on shaft 42ª. The opposite end of this shaft 83 carries a cross arm connection 87 (see Fig. 2) the outer ends of which are connected to the rods 88 and 89 and the upper ends of which are connected to pawl lifters 90 and 91 respectively. These pawl lifters engage slidably with studs fixedly mounted in the pawls 25ª and 26ª, and when in one position permit the engagement of the pawl 25ª with the ratchet 21ª at the same time holding out of action the pawl 26ª by preventing its engagement with the ratchet 22ª, and when in the reverse position permit the engagement of the pawl 26ª with the ratchet 22ª, and at the same time hold out of action the pawl 25ª from engagement with the ratchet 21.

The ratchet 21 is toothed so as to be engaged by the pawl 25ª which is hooked and operates upon its down stroke turning the screw shaft 11ª in a clockwise direction and moving the nuts 9ª toward each other, while the ratchet 22ª is toothed so as to be engaged by the pawl 26ª, which operates upon its up stroke, moving the shaft 11ª in a counter clockwise direction and therewith the nuts 9ª away from each other.

Carried upon the supporting shaft 81, which is supported in the nuts 9ª, 9ª, is the stop finger 82 which is brought manually into the path of the stops 7ª, 7ª (see Fig. 4) when it is desired to limit the movement of the thread carriers by the means described.

During the narrowing operation (i. e., the

shaping of the leg portion of the stocking) it is essential that the mechanism controlling the design be held out of action, and in order to accomplish this, I employ a stop device similar to that shown at 57ª Fig. 1 and operating upon the same shaft 42ª.

Mounted on a stud 93 adjacent the main cam shaft 5ª is the usual lever cam 90 which controls the narrowing mechanism, and attached thereto is an arm 92 (Figs. 6 and 7) which when the lever cam goes into action moves in the direction of the arrow (Fig. 6) against the collar 93 moving therewith the shaft 94 and the block 95 attached to the end thereof, into the path of travel of the collar 96 fixed to the shaft 42ª and prevents the shaft from being shifted to the left by spring 43ª. It will thus be seen that during the narrowing of the stocking the shaft 42ª which controls the operation of the design mechanism is prevented from working. A spring 97 tends to draw rod 94 toward the rear of the machine and so to normally hold the block 95 out of the path of collar 96.

The purpose of preventing operation of the screw-actuating means during narrowing arises out of the fact that if such means should happen to operate during narrowing the sinkers would cut off the yarns at the fabric and so cause press-offs and seconds.

It will be obvious to those skilled in the art that various modifications may be made in my device without departing from the spirit of the invention and therefore I do not limit myself to what is shown in the drawings and described in the specification but only as indicated in the appended claims.

Having thus fully described my said invention, what I claim as new and desire to secure by Letters Patent, is:

1. In a straight knitting machine, reciprocating yarn guide carrier rods, a finger supported independently of said yarn guide carrier rods said finger being adapted to be connected to one or more yarn guide carrier rods to reciprocate therewith, and stops arranged to limit the movement of the finger in opposite directions.

2. A device as in claim 1, combined with means for moving the stops simultaneously toward or from each other.

3. A device as in claim 1, combined with pattern-controlled means for moving the stops simultaneously toward or from each other.

4. A device as in claim 1, combined with pattern-controlled means for moving the stops simultaneously toward or from each other, said pattern-controlled means controlling both the time and the direction of movement of the stops.

5. A device as in claim 1, combined with pattern-controlled means for moving the stops simultaneously toward or from each other, and means for preventing operation of said means during the narrowing operation.

6. In a straight knitting machine, reciprocating yarn guide carrier rods, a finger supported independently of the yarn guide carrier rods said finger being adapted to be connected to one or more yarn guide carrier rods to reciprocate therewith, stops arranged to limit the movement of the finger in opposite directions, and a reversely threaded spindle connected to said stops for moving them toward or from each other.

7. A device as in claim 6, combined with pattern-controlled means for rotating said spindle.

8. A device as in claim 6, combined with pattern-controlled means for rotating said spindle, said pattern-controlled means controlling both the direction and the time of rotation of the spindle.

9. A device as in claim 6, combined with pattern-controlled means for rotating said spindle, and means for preventing rotation of said spindle during the narrowing operation.

10. In a straight knitting machine, reciprocating yarn-carrier rods, a pair of stops, means for moving the stops toward or from each other, a reciprocatory shaft carried by said stops and having its endwise movement limited by said stops, and means for connecting said shaft to one or more of said carrier rods.

11. A device as in claim 10, the stop-moving means being pattern-controlled to determine the direction and the time of such movement.

12. A device as in claim 10, the stop-moving means being pattern-controlled to determine the direction and the time of such movement, and means to prevent movement of the stops during the narrowing operation.

13. A device as in claim 10, the stop-moving means being pattern-controlled to determine the direction and the time of such movement, and means to prevent movement of the stops during the narrowing operation said last-named means being pattern-controlled.

14. In a straight knitting machine, reciprocating yarn guide carrier rods, a pair of stops, a reversely threaded spindle connected to said rods for moving them simultaneously toward or from each other, a reciprocatory shaft carried by said stops and having its endwise movement limited by said stops, and means for connecting said shaft to one or more of said carrier rods.

15. In a straight knitting machine, reciprocating yarn guide carrier rods, a pair of stops, reversely threaded spindle connected to said rods for moving them simultaneously toward or from each other, a reciprocatory shaft carried by said stops and having its endwise movement limited by said stops,

means for connecting said shaft to one or more of said carrier rods, means for rotating said spindle, and a single pattern chain controlling both the times and the direction of rotation of the spindle.

In testimony whereof I affix my signature.

RICHARD E. SCHLETTER.

DEFENDANT'S EXHIBIT H

600
Sheet 1

Prior Arts Spindles and Carrier's

1

Regular

End One Way Threaded Spindles – For Body Carrier One Way Reciting

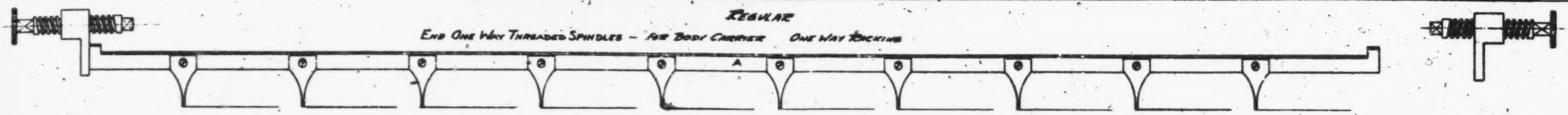

2

Same as Preceeding With Center Fixed Stop For Splicing With Limited Opening Allen

Regular

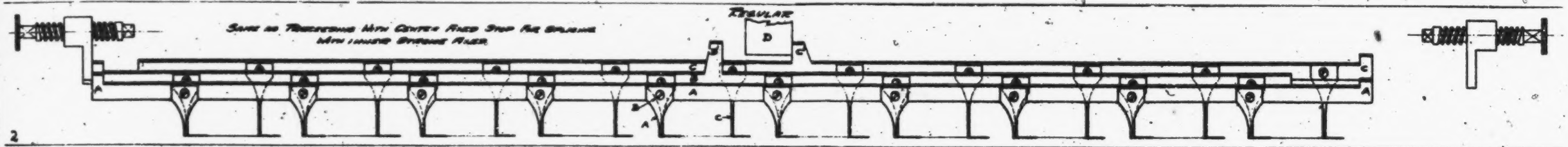

3

Center Two Way Threaded Spindle For Body Carrier One Way Reciting

T. Liebenecht

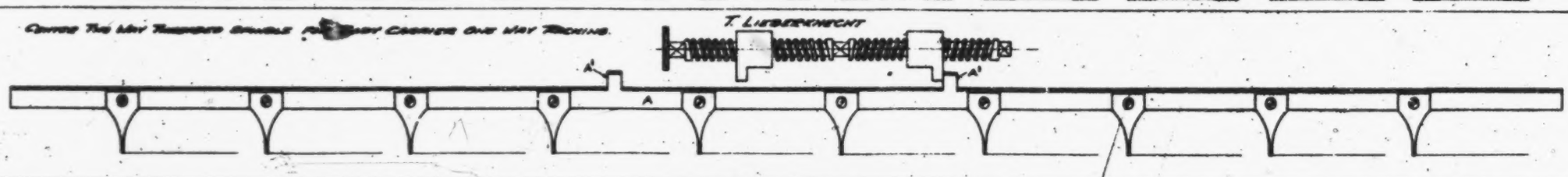

4

Same as Preceeding With Center Eccentric Fixed Stop For Splicing With Limited Opening Allen

T. Liebenecht

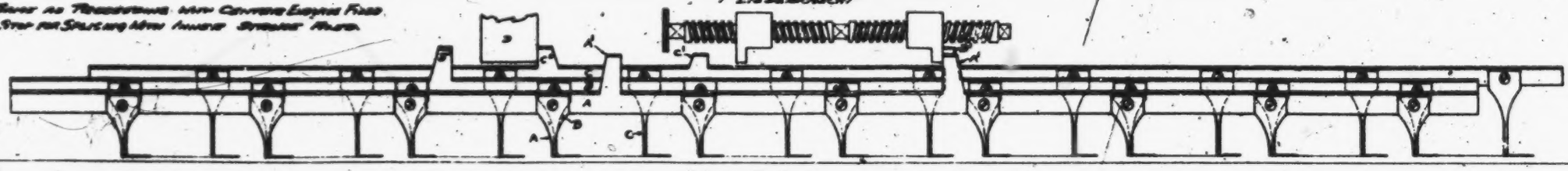

5

Lamb Et Al

Two Way Threaded Spindles For Body Carrier One Way Reciting With Solid Fixed or One Way Threaded End Spindles Z Capable of Two Way Reciting.

6

Lamb Et Al

Same as Preceeding, Except That Second Five of One Way Threaded End Spindles Z, Capable Of Two Way Reciting Are Used To Decrease Or Increase The Limited Opening of Splicing Or Split Sheet Carrier Centerline.

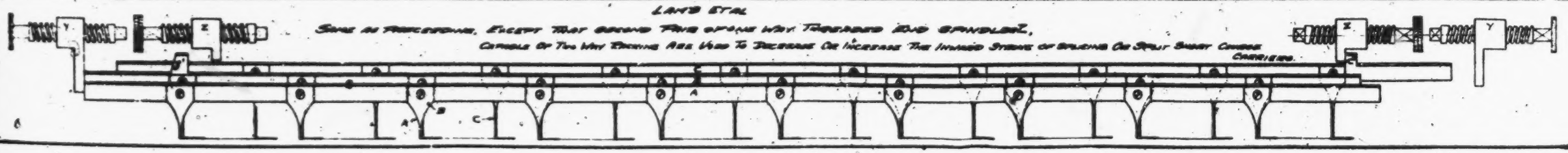

[fols. 601-604] DEFENDANT'S EXHIBIT NO. 1

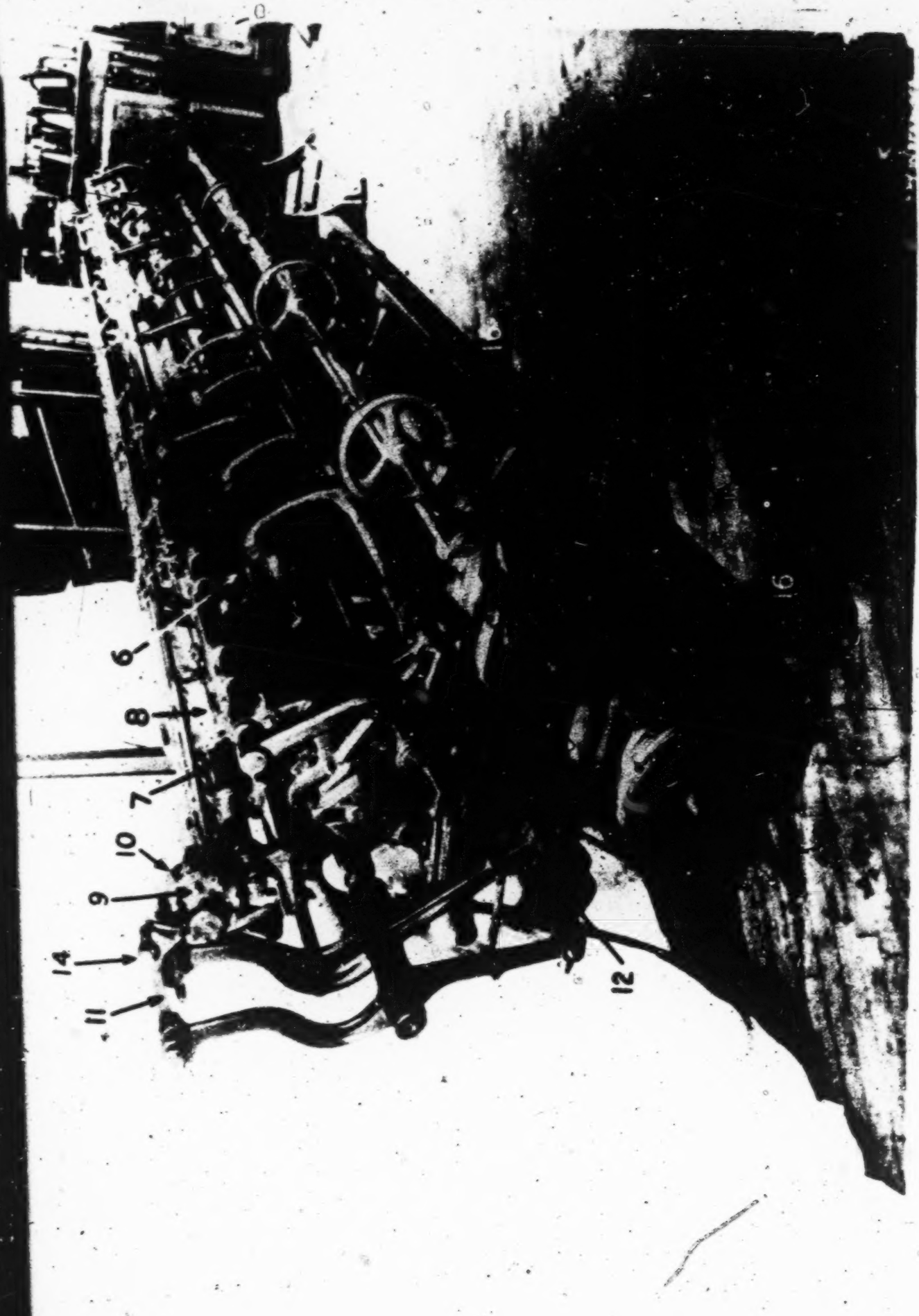

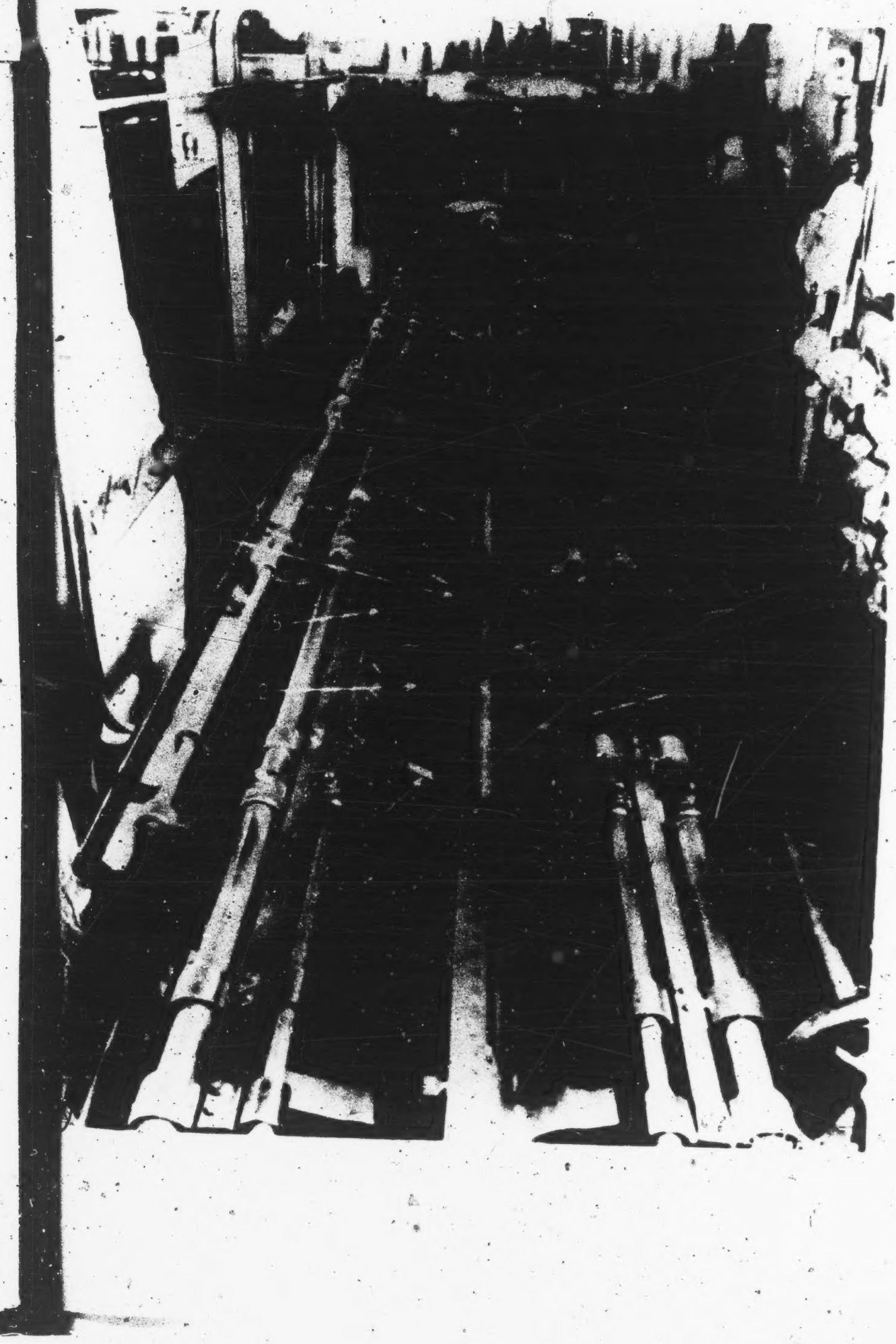

3

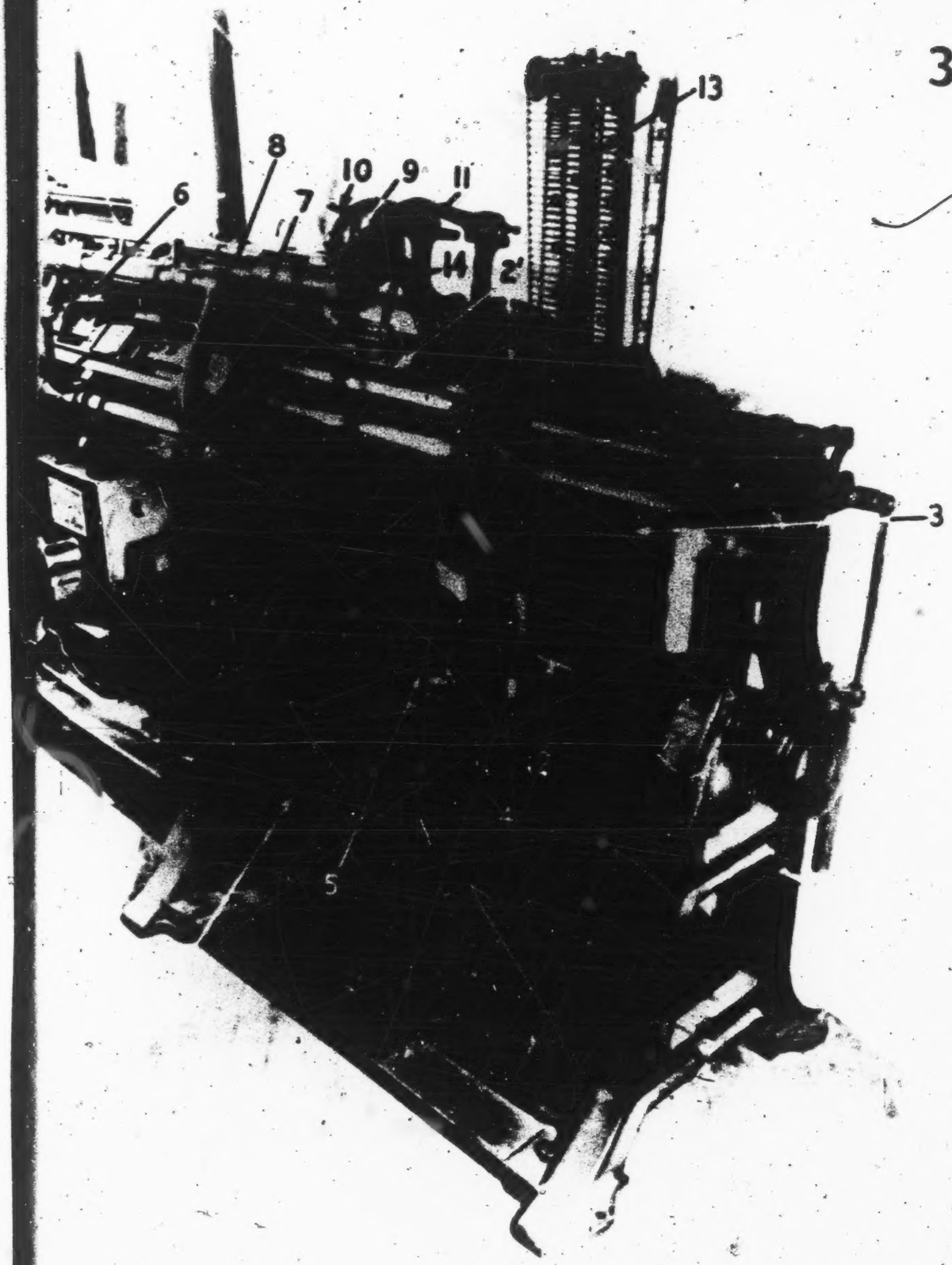

4
17

455

DEFENDANT'S EXHIBIT L 605

May 21, 1929. R. E. SCHLETTER 1,713,628

ATTACHMENT FOR FLAT KNITTING MACHINES

Filed Nov. 5, 1925 4 Sheets-Sheet 1

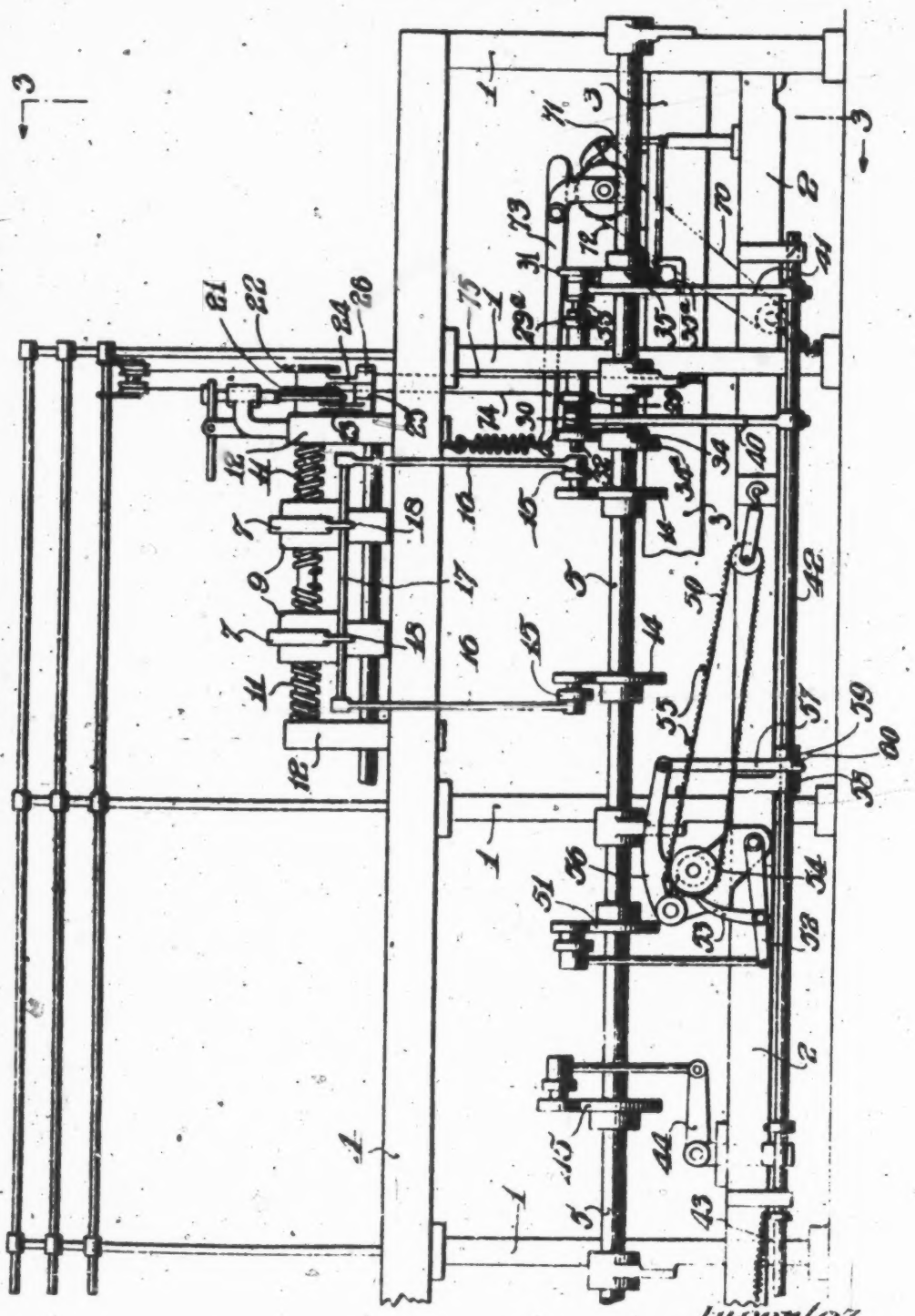

Fig. 1.

Inventor
Richard E. Schletter,
By Williams & Sackett
Attorneys.

456

606

May 21, 1929. R. E. SCHLETTER 1,713,628

ATTACHMENT FOR FLAT KNITTING MACHINES

Filed Nov. 5, 1925 4 Sheets-Sheet 2

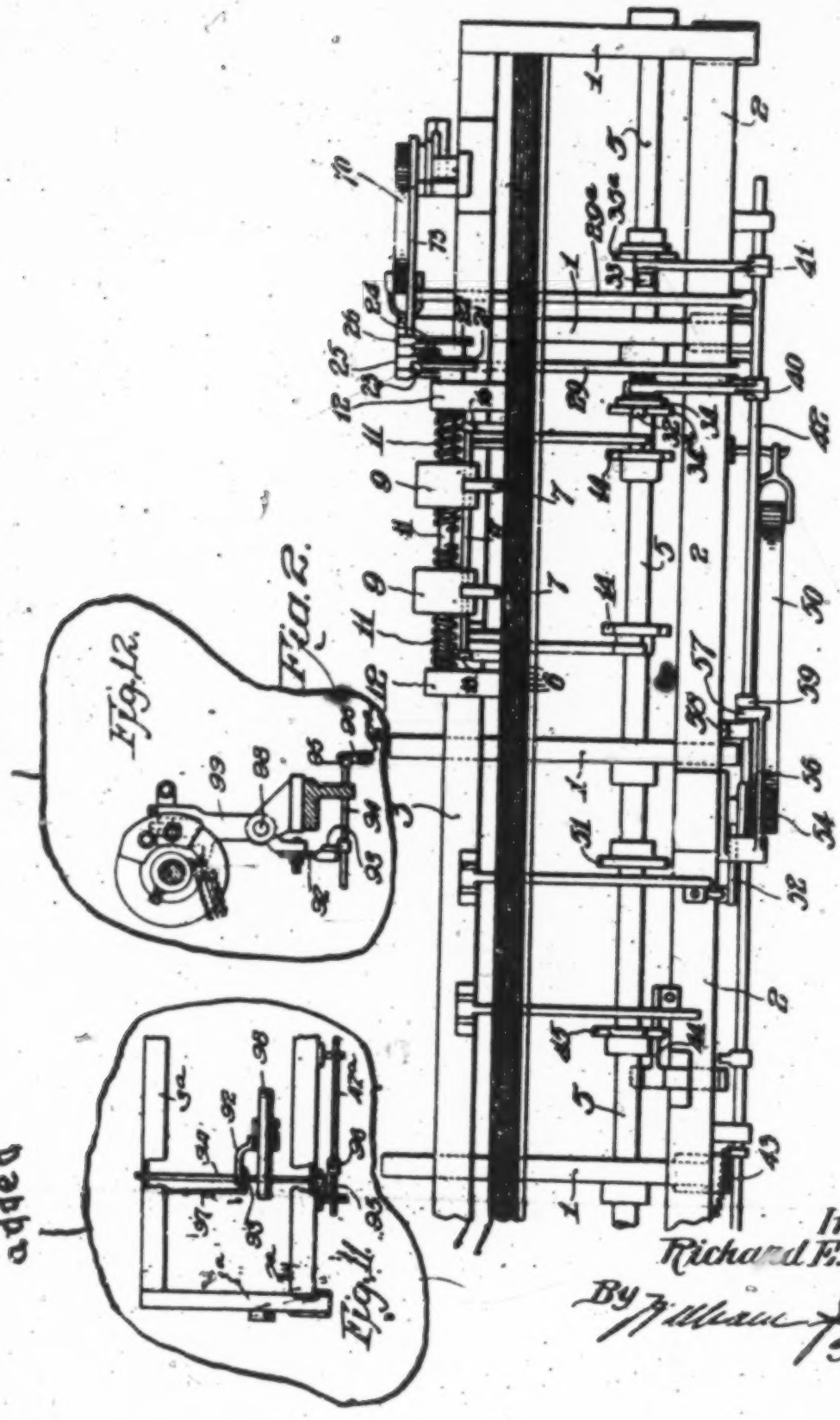

Fig. 12.

Fig. 11.

added

added

Inventor
Richard F. Schletter,
By William J. Thoken
Attorney.

L-2

457

607

May 21, 1929. R. E. SCHLETTER 1,713,628

ATTACHMENT FOR FLAT KNITTING MACHINES

Filed Nov. 5, 1925 4 Sheets-Sheet 3

Fig. 4.

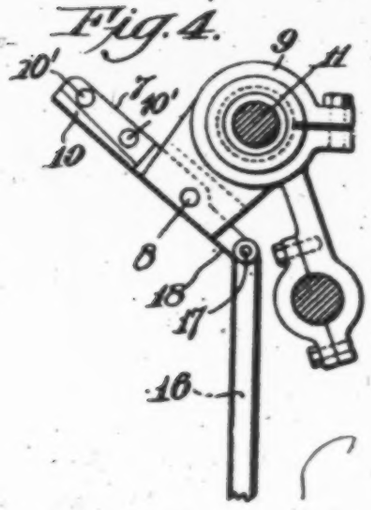

Fig. 3.

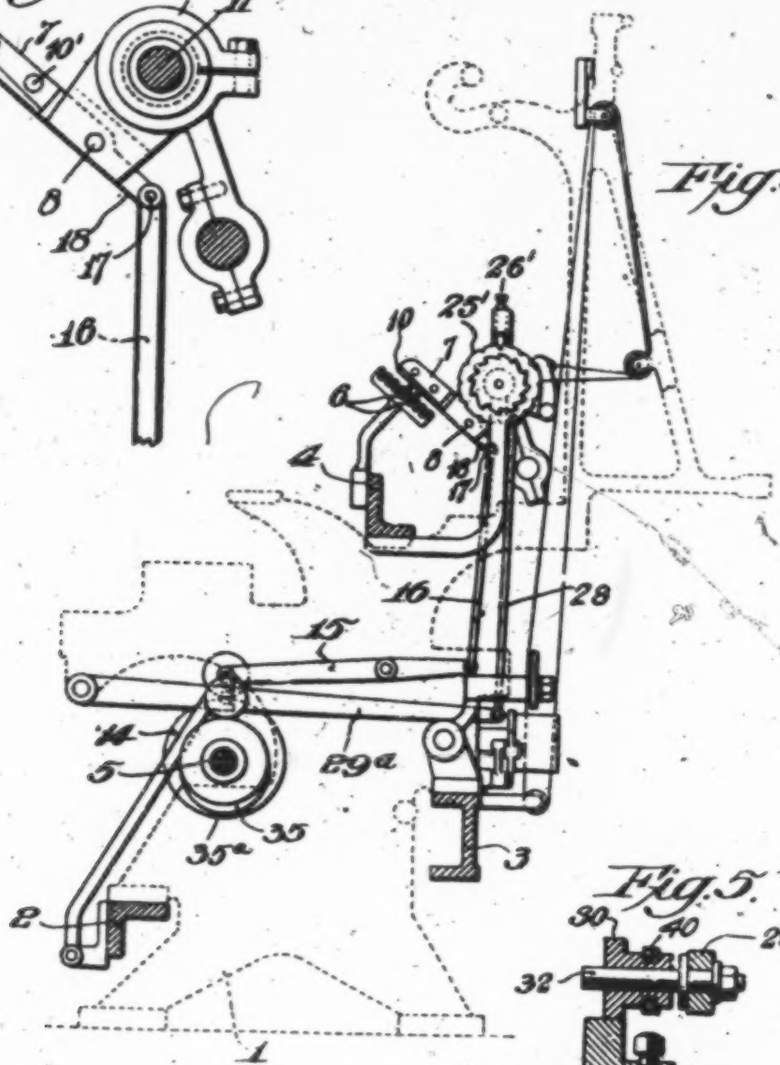

Fig. 5.

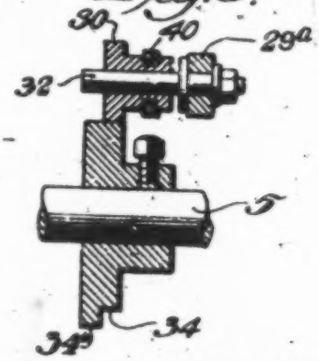

Inventor
Richard E. Schletter,
By
Attorneys

458

608

May 21, 1929. R. E. SCHLETTER 1,713,628

ATTACHMENT FOR FLAT KNITTING MACHINES

Filed Nov. 5, 1925 4 Sheets-Sheet 4

Fig. 6.

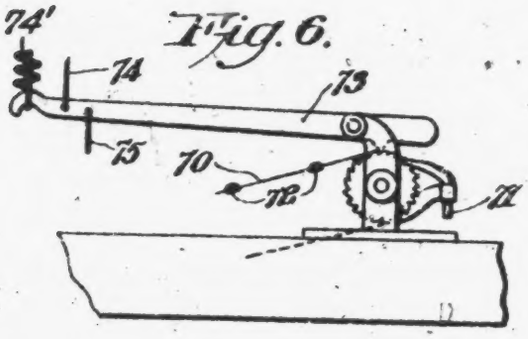

Fig. 7.

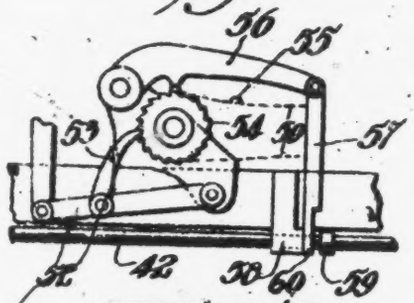

Fig. 10.

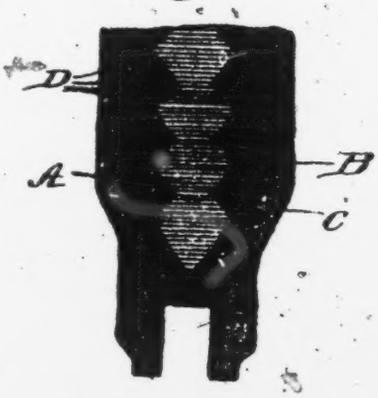

Fig. 8.

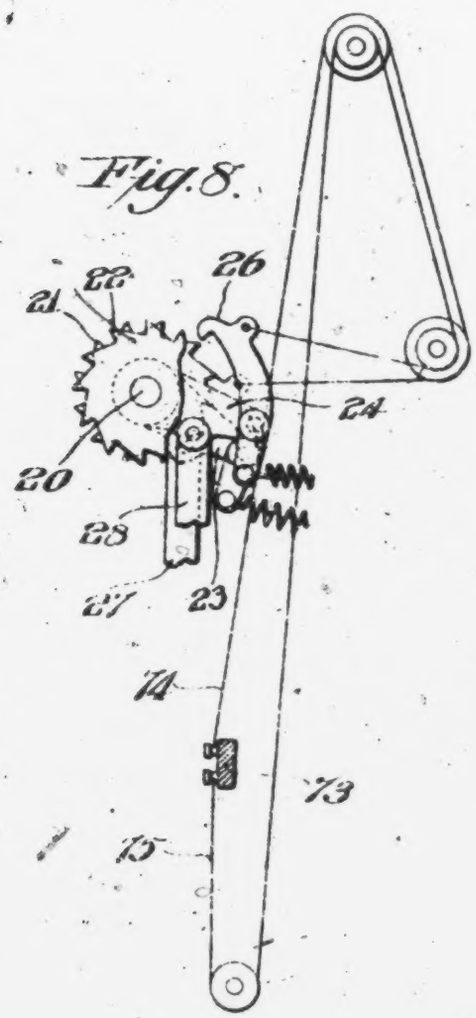

Fig. 9.

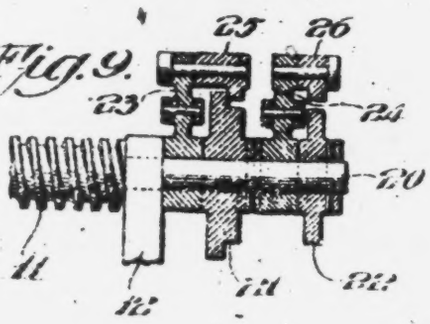

Inventor
Richard E. Schletter.
By
William J. Jackson
Attorney.

459.

609

Patented May 21, 1929. 1,713,628

UNITED STATES PATENT OFFICE.

RICHARD E. SCHLETTER, OF PHILADELPHIA, PENNSYLVANIA, ASSIGNOR, BY MESNE ASSIGNMENTS, TO SCHLETTER & SANDER, INC., OF PHILADELPHIA, PENNSYLVANIA, A CORPORATION OF DELAWARE.

ATTACHMENT FOR FLAT-KNITTING MACHINES.

Substitute for abandoned application Serial No. 569,559, filed June 19, 1922. This application filed November 5, 1925. Serial No. 66,916.

This invention, generally stated, has relation to flat knitting machines for making hosiery of full fashioned type and has more particular relation to an attachment for fashioning designs, as clocks, upon said hosiery. This application is a substitute for my abandoned application No. 569,559 filed June 19, 1922.

Commercially considered, two types of clocked hosiery are in use. In one type clocks are of open work, termed clocklace, and stockings of this type, being relatively fragile, are not suited for all occasions or every-day use and furthermore are comparatively expensive. The other type comprises hosiery in which clocks are embroidered thereon. While this type is best suited for every-day use, practice dictates, that, the action of needles laying-on the embroidery yarn serves to so weaken the stocking-web as to have a deleterious effect thereon. The embroidering operation also serves to increase manufacturing costs.

It is an object of my invention to provide an attachment for full-fashioned knitting machines whereby yarn-guides can be accurately controlled to lay a yarn over a distance less than the full length of a course being knitted, as for reinforcing or for so-called split-seam work wherein sections of fabric are connected by suture seams. For this purpose I preferably employ opposed stops with conjoint controlling means arranged to move them toward or from each other incrementally, but any equivalent means or devices may be employed which will effect the purpose of the invention.

A further object of the present invention is to provide an arrangement, connection and combination of novel mechanical movements attached to a conventional flat knitting machine for attaining the results sought by the leading object.

A further object is to provide an attachment for a flat knitting machine in which is provided a plurality of thread-carrier rods, stop-mechanism for said rods comprising a shaft including a screw having reversely-threaded portions carrying oppositely movable split-seam stops, means for moving said stops from and toward the rods to effect the split-seam interlooping of adjacent yarn-sections, means including a pattern chain and reversely-acting pawls for intermittently actuating said screw in successive courses, and separate means for selectively engaging said pawls.

A still further object is to provide an attachment for a flat knitting machine in which is provided a plurality of thread-carrier rods, stop-mechanism for said rods comprising a shaft including a screw, having reversely threaded portions carrying oppositely disposed stops, operating means for moving said stops from and toward the rods to limit variably the stroke of the yarn carrier rods, means including a pattern-chain and oppositely-acting pawls for intermittently rotating said screw in successive courses, and means including a separate pattern-chain for selectively engaging one of said pawls.

Other and further objects not at this time appearing will be hereinafter referred to.

The invention consists of the novel construction herein described and finally claimed.

The nature, characteristic features and scope of the invention will be more fully understood from the following description taken in connection with the accompanying drawings forming part hereof, and in which:

Fig. 1, is a view in front elevation of a portion of one type of full-fashioned knitting machine known as the "Cotton" machine with an attachment of the invention applied thereto, machine parts not essential to the invention being omitted.

Fig. 2, is a plan view thereof.

Fig. 3, is a sectional elevation, taken on the line 3—3 of Fig. 1, the machine frame outline being indicated in dotted lines.

Fig. 4, is an enlarged end view of the stop employed.

Fig. 5, is an enlarged cross-sectional view of the special form of cam employed for intermittently rotating the clock forming or split-seam screw that operates the stops.

Figs. 6 and 7 are fragmentary views illustrating the two pattern chain mechanisms for automatically controlling the movements of the clock forming or split-seam screw.

Fig. 8, is a view of the selective control means for engaging the reversely acting pawls;

Fig. 9, is a cross sectional showing of the pawl and ratchet mounting on the screw shaft.

460

610

Fig. 10, indicates one form of stocking fabric having yarn sections with inclined clock or split-seam border line ornamentation as made by means of my attachment; and

Figures 11 and 12, details of means preventing operation of my device simultaneously with a narrowing stop.

For the purpose of illustrating my invention I have shown in the accompanying drawings two forms thereof which are at present preferred by me, since the same have been found in practice to give satisfactory and reliable results, although it is to be understood that the various instrumentalities of which my invention consists can be variously arranged and organized and that my invention is not limited to the precise arrangement and organization of the instrumentalities as herein shown and described.

In practice a web of hosiery is knit upon a straight knitting machine equipped with the novel mechanism of the present invention which mechanism is capable of co-acting with respect to the web-forming needles to provide clocks or other ornamental re-inforcements which may be ornamental or useful or both, said reinforcements having zig-zag-like lines inclined to the wales and courses of the web. An example of such stocking re-inforcement, other than that shown in Fig. 10, is disclosed in letters patent granted to me under date of March 31, 1925, and numbered 1,531,349 wherein the clocks are made by a splicing yarn instead of by split-seam work. In manufacture, the stocking-web, which has selvage edges, may be knit with a main yarn in a well understood manner to that portion of the leg at which the narrowing operation takes place. At or about the time narrowing of the leg portion is commenced, additional or re-inforcing thread is presented to certain of the web-forming needles to effect formation of a clock or clocks. During formation of a clock or clocks it is to be understood that fabrication of the stocking-web, including the re-inforced heel portions, takes place in the usual and well understood manner of making full fashioned hosiery. The additional or re-inforcing thread is supplied to the web-forming needles so that zig-zag-like lines, inclined to the wales and courses of the web, are produced to effect the contour of a clock or clocks. Obviously, depending upon the contour of a clock or clocks desired, the feeding of additional thread varies. In practice I commence the formation of the clock or clocks midway of the narrowing portion of the web although obviously said formation may be started and stopped at other places and while but one clock may be formed upon a stocking-web, if desired, in practice two or more are preferred, the number being immaterial.

Referring now to the attachment for making a clock or other ornamentation, and referring more especially to Figs. 1 to 9 inclusive, the reference numeral 1 indicates the main frame of a flat knitting machine; 2, the front beam; 3, the back beam; 4, the center bed; and 5, the main cam shaft. Such machine may be of any well known full fashioned knitting machine type and to such my novel attachment is connected. These machines are commonly formed with a plurality of knitting sections, each of which is provided with the requisite number of yarn-guides, and the latter are mounted on longitudinally movable yarn carrier rods 6, 6, 6, 6, extending the full length of the machine and their joint movements controlled by rod-contacting stops, not shown, acting in well known manner at the ends of the machine. My invention, among other things, relates to special stops for these rods 6, 6, 6, 6, affecting the yarn-feed movements thereof, and for simplicity of showing I have indicated in the drawings only the rods themselves, it being understood that they carry thread guides and abutments such as shown in Figs. 11 and 12 and perform their usual functions as heretofore.

The special rod-stops 7, 7 (see Fig. 1) employed in my novel attachment, act in a manner similar to the action of the well known "Split-foot" stops heretofore employed in making split seam work, which stops however merely oscillated and did not travel lengthwise of the machine. In Figs. 3 and 4 of the drawings the stops are shown as having undercut portions at 10 which are desirable for split-seam work. My invention however is not limited to the use of these specific stops for this specific purpose but they may be used for all purposes for which stops are used. With the construction illustrated in Fig. 4 it is possible to produce split-seam stitches as in the "split-foot" stocking for uniting fabric sections by the delayed partial lifting of the stops, after the arrest of the rod movements, to allow additional movement of the rods determined by the depth of the undercut portions 10 (see Fig. 4) of said stops 7, 7, this additional movement occurring after the formation of the stitches of the course and forming floats of determined length extending into the next succeeding courses of knitting, the effect being to produce ornamental border line junction seams between fabric sections of the finished fabric.

Stops such as herein illustrated are used for making spliced or plated figures on a plain fabric and for split seam work, the split seam stops being undercut as in Fig. 4 and the others not undercut as in Fig. 16. It is new to control the stops by conjoint means for moving them toward or from each other to shorten or lengthen the stroke of the same guide at both ends.

Any conventional or desirable lugs, screws or other attachments may be located on the

461

611

carrier rods for cooperating with the stops and no claim is made to such devices.

The special stop employed in my novel attachment and the mechanism for operating the same, as fully described hereinafter, provides for the introduction of this split seam anywhere in the length of the fabric, for its automatic control by pattern-chain mechanism, and for varying the spreading of said stops in successive courses to reversely incline said split-seam border lines to the wales for producing ornamental figuration of the fabric, such as clocks.

The stops 7, 7, as shown in the drawing are pivotally carried at 8, 8 in nuts 9, 9 (see Fig. 4) respectively non-rotatively mounted on the right and left threaded portions of a screw shaft 11, rotatably carried in fixed brackets 12, 12 intermediate the length of the machine, and rocking movement from and toward said carrier rods is imparted to said stops by cams 14, 14 on cam shaft 5, through levers 15, 15 operated thereby and connected by rods 16, 16 to a horizontal bar 17 slidably engaging in the rear extensions 18, 18 of the stops 7, 7; this rocking movement permitting the laying of the floats of the split-seam and the depth of the undercut portion 10 determining the number of needles over which the yarn floats, and rotary movement of the screw shaft 11 adjusting the position of said stops 7, 7 in opposite directions. The points where the abutments mounted on the carrier rods normally strike the stops 7—7 are indicated at 10', 10' (Fig. 4).

The screw shaft 11, as more clearly shown in Fig. 2, has an end extension 20 fixedly carrying oppositely toothed ratchet wheels 21 and 22, and loosely strung rockarms 23 and 24 carrying spring-pressed pawls 25 and 26 adapted to engage the respective ratchet wheels 21 and 22, a notched disk 25' (Figs. 3 and 12) and a detent 26' held yieldably in engagement with the disk in conventional manner, being preferably employed to prevent accidental turning movement of said shaft 11. In other words, the screw shaft 11 may be positively moved backward or forward by the ratchet wheels 21 and 22 but said shaft, by reason of the teeth upon said disk 25', is locked against accidental turning movement at all times. (See Figs. 1 and 3.) Pattern-control means, hereinafter fully described, determines the selective engagement of the pawls, and connecting links 27 and 28 (see Fig. 3) respectively connect the rockarms 23 and 24 (see Fig. 2) to actuating levers 29 and 29a. Rollers 30 and 31 (see Figs. 1 and 5) having a limited longitudinal movement on their respective lever-carrier studs 32 and 33, are adapted to ride upon special cams on cam shaft 5, said cams having idle paths 34 and 35 and active paths 34a and 35a for the respective rollers, (see Fig. 5) to cause intermittent rotation of the screw shaft 11 as desired. Arms 40 and 41 loosely engaging the hubs of rollers 30 and 31 and carried by horizontal shaft 42, jointly move said rollers across their respective idle cam faces 34 and 35, and a spring 43 tends to impart longitudinal movement to said shaft 42 in one direction, while a cam 45 on cam shaft 5, through bell crank 44, imparts return movement to said shaft.

To automatically control the movement of this shaft 42 and thereby control the intermittent rotation of screw shaft 11, I employ, as shown, a pattern chain 50, (see Figs. 1, 2 and 7) to which step-by-step movement is imparted from cam shaft 5 through cam 51 and link connected lever 52, (see Fig. 1) the latter having a pawl 53 acting on the ratchet teeth of chain supporting wheel 54. Studs 55 on said chain are adapted to act upon a lever 56, carrying a shaft latch-member 57, to raise and lower the latter. This latch 57, as best shown in Fig. 7, slidably bears against a fixed shaft-supporting bracket 58, and when in lowered position the wide part of the latch engages a collar 59 fixed on said shaft 42 to hold the shaft 42 and its arms in a position where the rollers 30 and 31 are on the idle faces 34 and 35 of the cams.

When a stud 55 on said chain 50 lifts lever 56 and its shaft latch member 57, the reduced lower end 60 of the latch permits the spring 43 to move said shaft until the rollers 30 and 31 ride on the active paths 34a, and 35a, of their respective cams. Upon the passing of the stud 55, the wide part of the latch member 57 will fall again into engagement with collar 59, when the shaft 42 is again moved to the right by action of cam-actuated bell crank 44. The number of studs 55 on chain 50 will determine the number of rotations of the screw-shaft 11 and the movement of the nuts 9—9, to shift the stops 7—7 controlled thereby, toward and from one another in a direction crosswise of the wales of the knitted fabric.

To cause selective engagement of the pawls 25 and 26 before referred to, and thereby determine the direction of rotation of screw-shaft 11, I preferably employ as shown, a second pattern chain 70, to which step-by-step movement is imparted by the operation of cam 35a on a lever carrying the paw 71 (Fig. 1) to impart movement to the ratchet wheel carrying the pattern chain aforesaid having studs 72 operating a spring-pressed lever 73 (Figs. 6 and 8). Wires 74 and 75 extending over suitable pulleys, connect the lever 73 to the respective spring-pressed pawls 25 and 26, so that the movement of said lever 73 (as determined by the presence or absence of a stud 72, causes one or the other pawl to engage with its respective ratchet wheel 21 or 22) to impart the desired direction of rotation to the screw 11 through the intermittently acting levers 29 and 29a which operate

462

612

the respective pawls. A spring 74' holds the lever 73 in the position shown when no button 72 is acting on the downwardly projecting lug of the lever.

From the foregoing description it will be seen that the yarn-guide controlling stops employed in my novel attachment may be moved from and toward each other by direct cam shaft action to cooperate with the usual knitting mechanism in producing the desired spliced or split-seam ornamentation of the adjacent fabric sections, and their relative adjustment from and toward one another automatically controlled and intermittently effected in successive courses. My novel split-seam stops, it will be understood, are employed in producing fabrics having sections of separate yarns of which for illustrative purposes one type is shown in Fig. 10, or spliced areas as shown in my said patent. In the particular illustrative fabric shown in Fig. 10, three yarn carrier rods have been employed for making a split seam fabric, each having a yarn guide supplying yarn only to its respective section A, B, or C, and my oppositely movable split seam stops have caused the interlooping of these yarn sections to form the reversely inclined split seam border lines D.

Each of the carrier bars for sections A and C is stopped on its outward movement by the conventional end stops at the ends of the machine and on its return movement by a stop 7. The carrier rod for section B has an abutment or abutments moving between stops 7, 7 and striking against one or the other at the ends of its throw. It would also be possible to provide abutments on this last-named rod outside the stops so as to strike alternately against the outer faces of the stops. Additional sections could readily be provided for by equipping differently located abutments so that the travel of the guides would cover different vertical stripes or yarns of the fabric.

Mounted on a stud 98 adjacent the main cam shaft 5ª is the usual lever cam 92 which controls the narrowing mechanism, and attached thereto, is an arm 92 (Figs. 11 and 12) which when the lever cam goes into action moves in the direction of the arrow (Fig. 11) against the collar 93 moving therewith the shaft 94 and the block 95 attached to the end thereof, into the path of travel of the collar 96 fixed to the shaft 42ª and prevents same from operating. It will thus be seen that during the narrowing of the stocking the shaft 42ª which governs the operation of the design mechanism is prevented from working. A spring 97 tends to normally hold the block 95 out of the path of collar 96.

The purpose of preventing operation of the screw-actuating means at this time arises out of the fact that if such means should happen to operate during narrowing the sinkers would cut off the yarns at the fabric and so cause press-offs and seconds.

What I claim is:

1. In a straight knitting machine having cooperating yarn guide carrier bars, a pair of opposed stops for certain of said carrier bars which have a stroke less than the full width of the fabric being knitted, and a reversely threaded spindle for moving said stops toward and from each other to vary the stroke of the bars controlled by said stops.

2. In a straight knitting machine having cooperating reciprocatory yarn guide carrier bars, a reversely threaded spindle, stops connected to the spindle positioned to limit the traverse of certain of the cooperating carrier bars to less than the full width of the cloth being knitted, and pattern controlled means for turning said spindle to vary the distance between said stops.

3. A device as in claim 2, said pattern controlled means being constructed and arranged to turn said spindle either to increase or to decrease the distance between said stops.

4. In a straight knitting machine, yarn guide carrier bars having a stroke less than the full width of the fabric being knitted, abutments on said carrier bars, a reversely threaded spindle, opposed stops for engagement by said abutments, said stops being operated by the reversely arranged threads of said spindle to vary the distance between them, and pattern controlled means for rotating said spindle.

5. In a straight knitting machine having guides for one or more yarns knitted in for less than the full length of a course, the combination of carrier bars for said guides, a reversely threaded spindle parallel to said bars, stops in the path of said abutments said stops being connected to the reversely threaded parts of said spindle, and pattern controlled means for rotating said spindle to vary the distance between said abutments.

6. In a straight knitting machine, yarn guide carrier bars including one or more bars having a stroke less than the full width of the fabric being knitted, abutments on said carrier bars, a reversely threaded spindle, opposed stops supported on the reversely threaded portions of said spindle for engagement by said abutments, and means for rotating said spindle.

7. In a straight knitting machine having reciprocating yarn guide carrier bars, a reversely threaded spindle, stops connected to the spindle positioned to limit the traverse of certain carrier bars, pattern controlled means for turning said spindle, and means for preventing operation of said means during the narrowing operation.

8. In a straight knitting machine having reciprocating yarn guide carrier bars, a reversely threaded spindle, stops connected to

463

613

the spindle positioned to limit the traverse of certain carrier bars to a distance less than the width of the fabric being knitted, pattern controlled means for turning said spindle in either direction, and means for preventing operation of said means during the narrowing operation.

9. In a straight knitting machine, a set of yarn guide carrier bars, stops for said bars said stops having undercut portions normally out of operative relation to said bars, means for moving said stops toward and from each other, and means to move the stops so as to bring the undercut portions into operative relation to said bars, thereby permitting delayed additional movement of said bars.

10. In a straight knitting machine, a set of yarn guide carrier bars, pivoted stops for said bars said stops having undercut portions, means whereby the stops may be caused to approach or recede from each other, and pattern-controlled means to tilt the stops to bring the undercut portions into operative relation to said bars, thereby permitting delayed additional movement of said bars.

11. In a straight knitting machine, a set of yarn guide carrier bars, a reversely threaded spindle parallel to said bars, nuts on the reversely threaded portions of said spindle, stops operated by said nuts for limiting the movement of said carrier bars said stops having undercut portions, pattern controlled means for rotating the spindle to vary the distance between the stops, and means for moving the stops so as to bring the undercut portions into operative relation to said bars thereby permitting delayed additional movement of said bars.

12. In a straight knitting machine, a set of yarn guide carrier bars including one or more bars having a traverse less than the width of the fabric being knitted, a threaded spindle, a stop for limiting the traverse of a carrier bar in one direction said stop having an undercut portion, and being connected to said spindle, means for turning the spindle to move the stop lengthwise of the bar to vary the traverse of the bar, and means for moving the stop to bring the undercut portion into operative relation to said bar to permit delayed additional movement of the bar.

13. In a straight knitting machine, a set of yarn guide carrier bars including one or more bars having a traverse less than the width of the fabric being knitted, a threaded spindle, a nut on the spindle, a stop pivotally supported by the nut for limiting the traverse of a carrier bar in one direction said stop having an undercut portion, means for turning the spindle to move the stop lengthwise of the bar to vary the traverse of the bar, and means for moving the stop on its pivot to bring the undercut portion into operative relation to said bar to permit delayed additional movement of the bar.

14. In a straight knitting machine, a set of yarn guide carrier bars for operating yarn guides traveling less than the full width of the fabric being knitted, a spindle having reversed screw threads, stops operated by said spindle, means for turning the spindle in either direction, pattern-controlled means for determining the time of operation of the spindle, and pattern-controlled means for determining the direction of rotation of the spindle.

15. In a straight knitting machine, a set of reciprocating yarn guide carrier bars including bars having a stroke less than the width of the fabric being knitted, pair of stops for said guides, a reversely threaded spindle extending lengthwise of the machine, the respective stops being connected to the reversely threaded portion of the spindle for moving the stops simultaneously toward and from each other, pattern controlled means for determining the time for such movement, and correlated pattern controlled means for independently determining the direction of such movement.

16. In a straight knitting machine having a main cam shaft, a set of yarn guide carrier bars, a spindle having reversed screw threads, stops connected to said spindle said stops limiting the travel of the carrier bars, means for turning the spindle in either direction, pattern-controlled means for determining the time of operation of the spindle including a rod extending lengthwise of the machine, connections from the main cam shaft for moving the rod in one direction, a detent for holding the rod, and means including a pattern chain for releasing the detent to permit the rod to return.

17. In a straight knitting machine, a set of yarn guide carrier bars, a spindle having reversed screw threads, stops connected to the spindle said stops limiting the travel of said carrier bars, reversible pawl and ratchet means for turning the spindle, pattern-controlled means for determining the time of operation of the spindle including a rod extending lengthwise of the machine, connections from the main cam shaft for moving the rod in one direction, a detent for holding it, means including a pattern chain for releasing the detent to permit the rod to return, means for determining the direction of rotation of the spindle including a second rod paraliel to the first, means on the first rod for moving the second in one direction, a detent for holding the second rod, and connections from said pattern chain for releasing the second rod.

18. In a straight knitting machine having cooperating yarn guide carrier bars, a pair of opposed stops for a carrier bar having a stroke less than the full width of the fabric being knitted, and a rod-like element having

L-9

means to move said stops toward and from each other longitudinally of said element and to hold said stops at various distances from each other.

19. In a straight knitting machine having cooperating yarn guide carrier bars, means for making a fabric with sections connected by suture seams including a pair of opposed stops for a carrier bar supplying yarn to one of said sections, and a reversely threaded spindle for moving said stops toward and from each other to vary the stroke of said bar.

20. In a straight knitting machine having cooperating reciprocatory yarn guide carrier bars, means for knitting a fabric with sections connected by suture seams including a reversely threaded spindle, stops connected to the spindle positioned to limit the travel of a carrier bar supplying yarn to one of such sections, and pattern controlled means for turning the spindle to increase or decrease the distance between said stops.

21. In a straight knitting machine having cooperating yarn guide carrier bars, means for knitting a fabric with sections connected by suture seams including a pair of opposed stops for a carrier bar supplying yarn to one such section, and a rod-like element carrying the stops, and means to move said stops toward and from each other longitudinally of said element and to hold said stops at various distances from each other.

22. In a full fashioned knitting machine comprising a plurality of thread-carrier rods, stop-mechanism for said rods comprising a pair of oppositely traversing split-seam stops which at every step of traverse move toward or away from each other, means for moving said stops from and towards the rods to effect the split-seam interlooping of adjacent fabric sections, and means for intermittently moving said stops to reversely incline the split-seams to the lines of the wales.

23. In a full fashioned knitting machine comprising a plurality of thread-carrier rods, stop-mechanism for said rods comprising a screw shaft having reversely-threaded portions carrying oppositely movable split-seam stops adapted to control the split-seam interlooping of adjacent fabric sections, and means for intermittently actuating said screw in successive courses to reversely incline the split-seams to the lines of the wales.

In testimony whereof, I have hereunto signed my name.

RICHARD E. SCHLETTER.

DEFENDANT'S STRUCTURE

1

CLOCKWISE RACKING WITH TOP PAWL MOVES STOP-NUTS APART TO WIDEN SELVAGE PORTIONS AND ALSO PULLS BACK STOP PINS UP.

COUNTER CLOCKWISE RACKING WITH BOTTOM PAWL MOVES STOP-NUTS TOWARD EACHOTHER TO NARROW SELVAGE PORTIONS AND ALSO PULLS FRONT STOP PINS UP.

BACK STOP PIN LIFT ROD

FRONT STOP PIN LIFT ROD

BACK STOP PINS

FRONT STOP PINS

CARRIERS 2, 5, 6

TOP PAWL CLOCKWISE RACKING

FINISH OF RACKING

STOPS MOVED OUTWARDLY

BACK PINS LIFTED

START OF RACKING

BOTTOM PAWL COUNTER CLOCKWISE RACKING

FINISH OF RACKING

STOPS MOVED INWARDLY

FRONT PINS LIFTED

START OF RACKING

DEFENDANT'S EXHIBIT M 615

DEF. EX. M p. 2

616

(2)

DEFENDANT'S STRUCTURE

BACK STOP PINS UP - CLOCKWISE RACKING WITH TOP PAWL

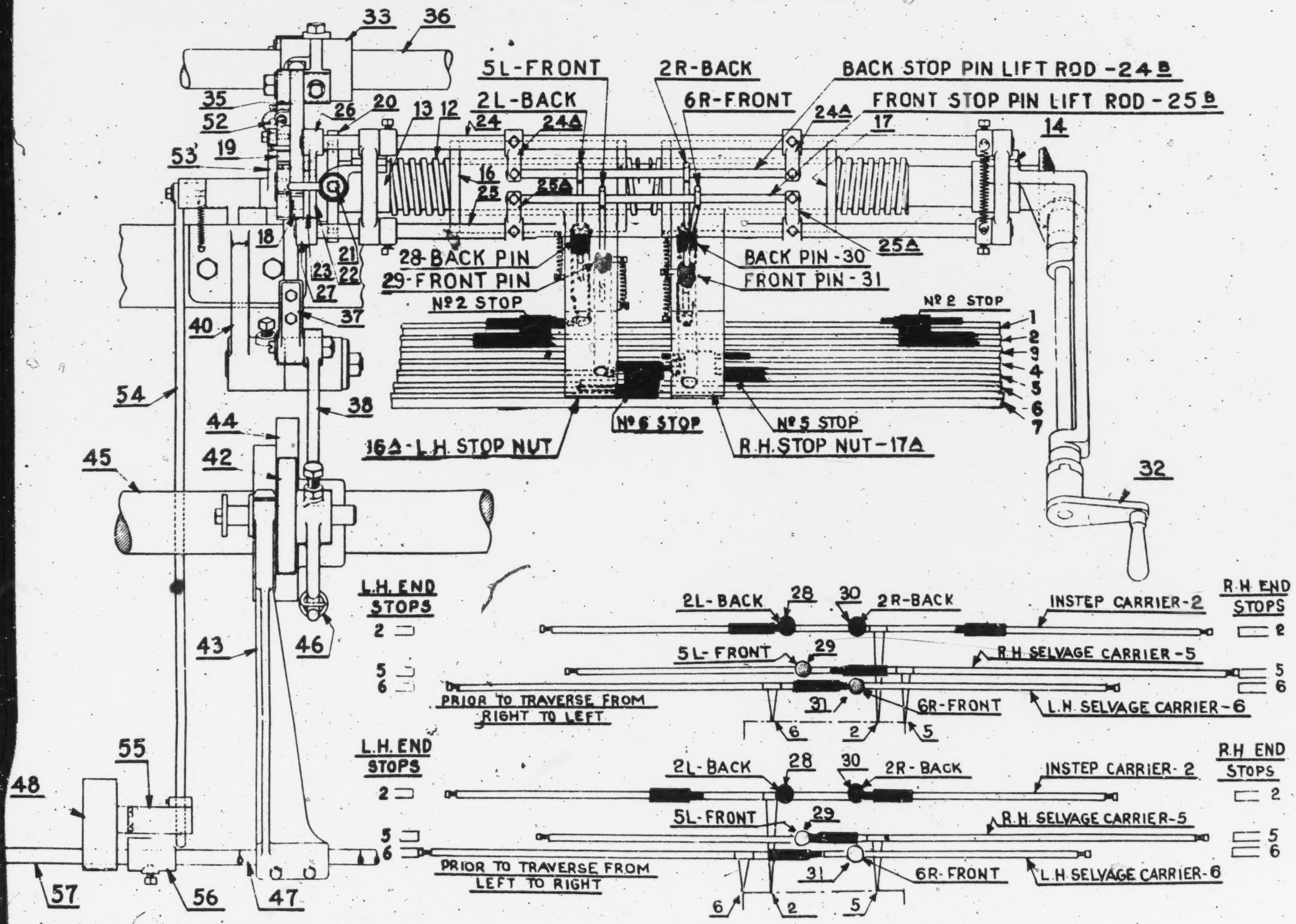

PATTERN CHAIN CONTROL FOR DETERMINING TIME AND DIRECTION OF SPINDLE ROTATION.

DEFENDANT'S STRUCTURE

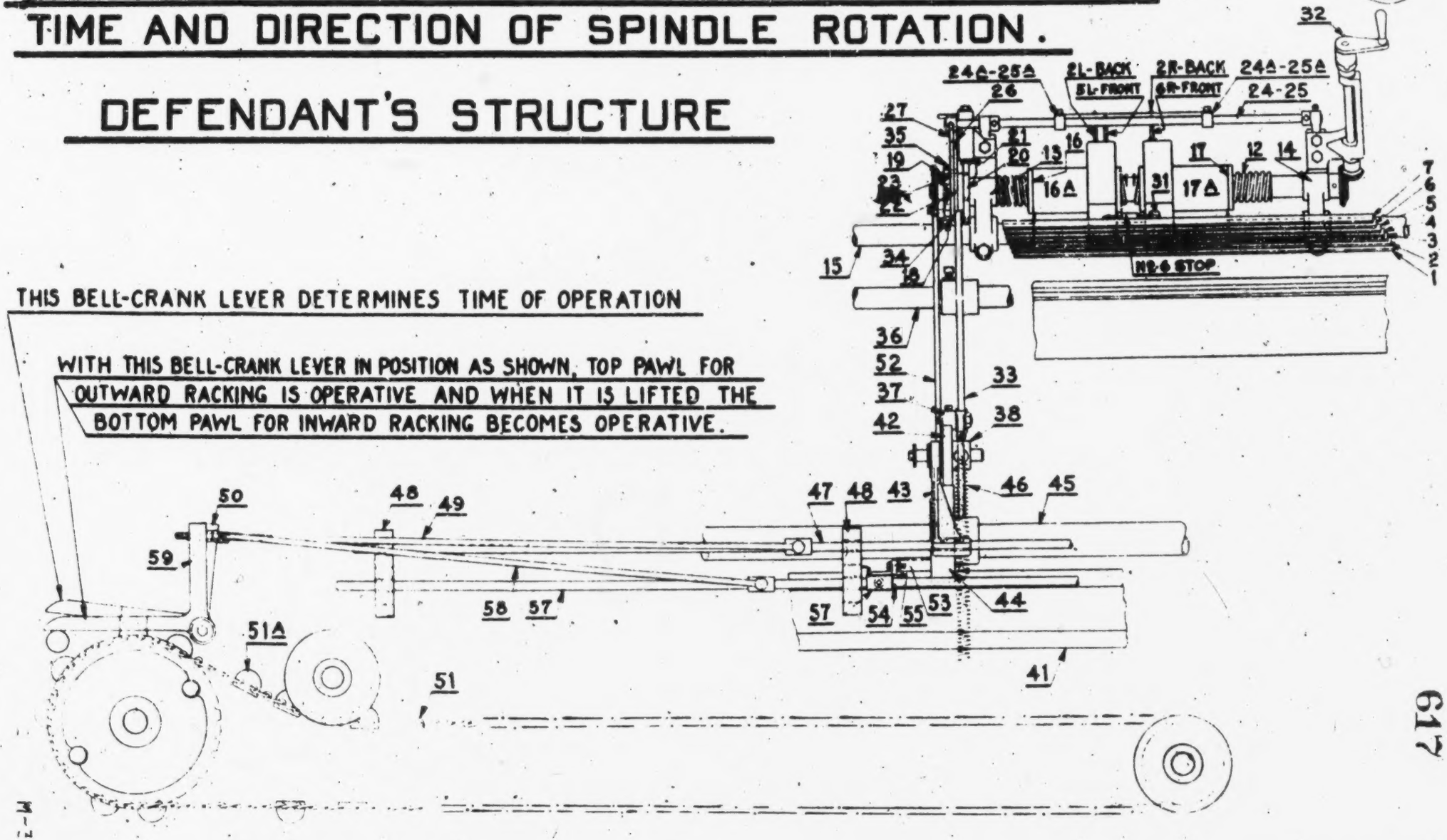

618

DEFENDANT'S EXHIBIT N

I N D E X

Patentee	Patent No.	Tab No.
Cecka	1,180,568	1
Cecka	1,217,411	2
Chipman	1,163,970	3
Gee	1,014,753	4
Kilbourn	19,370	5
Landenberger	1,134,749	6
Lieberknecht	981,663	7
Muller	1,564,438	8
Oesterreich	1,644,688	9
Rowlett	500,953	10
Sowter	478,527	11
Schletter	1,198,482	12
Zwicky	1,608,285	13

470

F. CECKA.

KNITTING FRAME.

APPLICATION FILED JAN. 14, 1915.

1,180,568.

Patented Apr. 25, 1916.

2 SHEETS—SHEET 1.

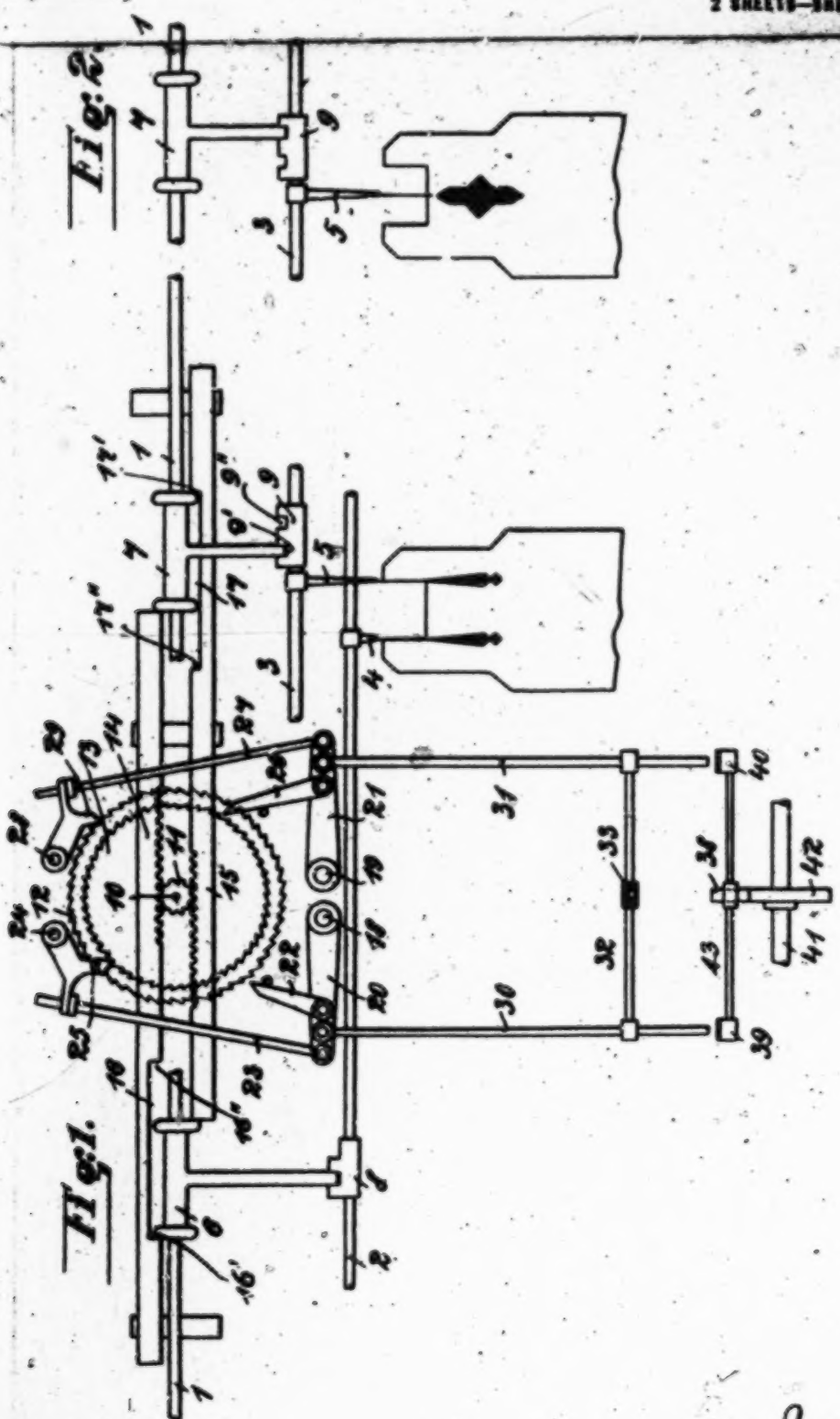

Witnesses:
B. Dommers
E. Leckert

Inventor
Franz Cecka
By [signature] Atty

471

F. CECKA.

KNITTING FRAME.

APPLICATION FILED JAN. 14, 1915.

1,180,568.

Patented Apr. 25, 1916.

2 SHEETS—SHEET 2.

Fig: 3.

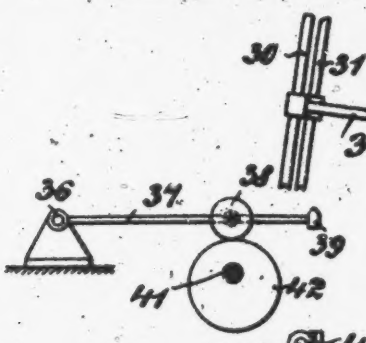

Fig: 4.

Fig: 5.

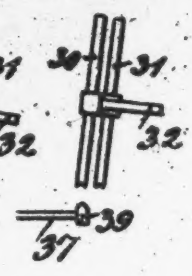

Fig: 6.

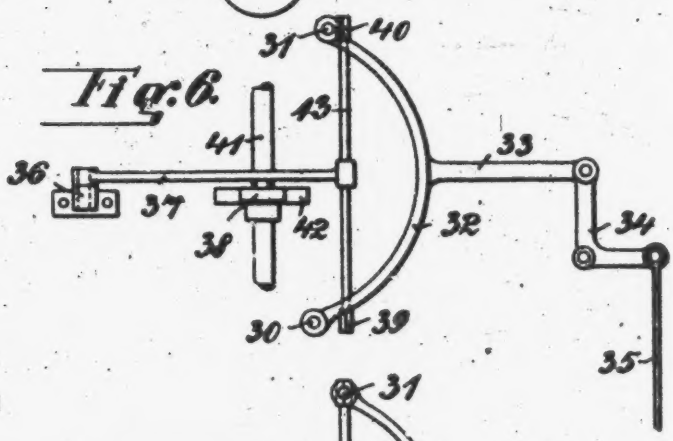

Fig: 7.

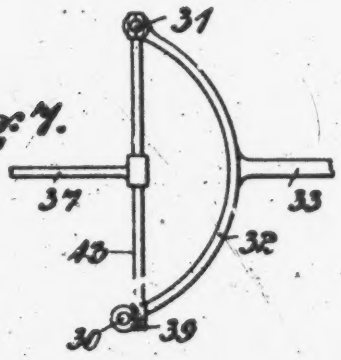

Fig: 8.

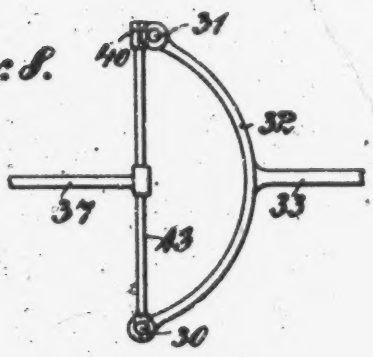

Witnesses:
B. Dommers
C. Leckert

Inventor
Franz Cecka
By [signature] Atty

UNITED STATES PATENT OFFICE.

FRANZ CECKA, OF CHEMNITZ, GERMANY, ASSIGNOR TO THE FIRM OF SCHUBERT & SALZER MASCHINENFABRIK, AKTIENGESELLSCHAFT, OF CHEMNITZ, GERMANY.

KNITTING-FRAME.

1,180,568. Specification of Letters Patent. Patented Apr. 25, 1916.

Application filed January 14, 1915. Serial No. 2,174.

To all whom it may concern:

Be it known that I, FRANZ CECKA, a citizen of the German Empire, residing at Chemnitz, in the Kingdom of Saxony, Germany, have invented certain new and useful Improvements in Knitting-Frames; and I do hereby declare the following to be a full, clear, and exact description of the invention, such as will enable others skilled in the art to which it appertains to make and use the same, reference being had to the accompanying drawings, and to letters or figures of reference marked thereon, which form a part of this specification.

My invention relates to improvements in knitting frames, and more particularly in apparatus for knitting in hosiery or the like patterns from reinforcing threads, and the object of the improvements is to provide an apparatus of this class, by means of which reinforced portions can be knitted in the medial parts of the fabric as distinguished from known frames by means of which reinforced portions can be knitted only at the sides of the fabric. Thereby I am enabled to produce patterns of various form, and the effect of such reinforced portions can be increased by knitting the same from threads of a color different from that of the foundation.

For the purpose of explaining the invention an example embodying the same has been shown in the accompanying drawings, in which the same letters of reference have been used in all the views to indicate corresponding parts.

In said drawings—Figure 1, is a front view of the parts of the knitting frame to which my invention more particularly relates, Fig. 2, is a detail view showing one of the thread guides in a different position, and Figs. 3 to 8, are respectively side views and plan views of the driving elements of the improved apparatus and showing the same in different positions.

For the purpose of explaining the invention reference will be made to a flat hosiery frame of known construction. But I wish it to be understood, that my invention is not limited to the construction shown in the drawings, nor to the use in combination with a flat hosiery frame.

Referring now to the drawings, a rod 1 is connected in the usual way with a slur connecting bar (not shown) so as to take part in the reciprocating movements of the same. The rod is adapted to impart reciprocating movement to rails 2 and 3 which carry additional thread guides 4 and 5 which are used in knitting reinforcing threads. The rod 1 carries thread guide brakes 6 and 7 the arms of which are arranged for engagement in carrying members 8 and 9 provided on the rails 2 and 3. The carrying member 9 is formed with two notches 9′ and 9″ which are adapted to be engaged by the arm of the brake 7.

To a shaft 10 a pinion 11 is secured which is connected with ratchet wheels 12 and 13 having their teeth disposed in opposite directions, and which is engaged on opposite sides by racks 14 and 15 formed with reduced portions 16 and 17 providing shoulders 16′, 16″ and 17′, 17″. The rod 1 on which the thread guide brakes 6 and 7 are mounted is located between the rails 14 and 15. The brake 6 extends between the shoulders 16′ and 16″ of the rack 14 and the brake 7 between the shoulders 17′ and 17″ of the rack 15. The end of the rack 14 is located in the path of the brake 7 and the end of the rack 15 in the path of the brake 6.

At 18 and 19 levers 20 and 21 have rocking supports. The lever 20 carries a pawl 22 which is adapted to act on the ratchet wheel 12, and it has an arm 23 linked thereto which is connected with a pawl 25 mounted at 24 and acting on the ratchet wheel 13. The lever 21 carries a pawl 26 which acts on the ratchet wheel 13, and it has an arm 27 linked thereto which is connected with a pawl 29 supported at 28 and acting on the ratchet wheel 12. Furthermore to the lever 20 a link 30 is jointed and to the lever 21 a link 31. The links 30 and 31 are connected by a bail 32. The latter is made integral with an arm 33 which is connected by a bell crank lever 34 with a rod 35 connected with a counting mechanism, a Jacquard pattern, or the like.

On a bracket 36 a lever 37 is mounted which carries a rotary disk 38. The free end of the said lever carries a transverse arm 43, the end parts 39 and 40 of which extend into the paths of the links 30 and 31. To a shaft 41 and in position for engagement with the disk 38 a cam 42 is secured.

The operation of the apparatus is as fol-

lows: As appears from Figs. 3 to 8, the bail 32 has such a form, that the links 30 and 31 are staggered with relation to each other. When the cam 42 secured to the shaft 41 is being rocked, it imparts reciprocating movement in vertical direction to the lever 37. With the bail 32 and the links 30 and 31 in the positions shown in Figs. 3 and 6 this movement has no influence on the ratchet mechanism. When the bail is set by the counting mechanism in either one of the positions shown in Figs. 4 and 7, the link 31 gets in position above the end part 40 of the transverse arm 43 connected with the lever 37, so that when the lever 37 is rocked upward the link 31 is lifted, so that the lever 21 is rocked and the pawl 26 advances the ratchet wheel 13. Thereby the racks 14 and 15 which are in engagement with the pinion 11 are shifted respectively to the right and to the left. When the bail 32 and the links 30 and 31 are set in the positions shown in Figs. 5 and 8, the link 31 gets out of the path of the end part 40 of the arm 43 and the link 30 gets in position above the end part 39 and causes the pawl 22 to act on the ratchet wheel 12. Thereby the rods 14 and 15 are moved in the opposite direction.

In Fig. 1 I have shown the parts in the positions in which the brake 6 is engaged by the shoulder 16′ of the reduced portion 16 of the rack 14 and by the end of the rack 15. In the same way the brake 7 is held in position by the shoulder 17′ of the rack 15 and the end of the rack 14. Therefore the thread guides 4 and 5 can not move. If it is desired to knit reinforced patterns, the rod 14 is shifted to the left by the ratchet mechanism, so that the brakes are released and can move so as to be able to move together with the rod 1. According to the path through which the brakes can move also the additional thread guides 4 and 5 can move. The path of the latter can be increased to the length of the reduced portions 16 and 17. By properly operating the ratchet mechanism and thereby increasing or decreasing the path patterns of different form can be produced.

In order that instead of a pattern which is repeated on the fabric a central pattern can be produced the second notch 9″ of the carrier 9 is provided. When the arm of the thread guide brake 7 is thrown into engagement with the notch 9″, the thread guide 5 gets in a medial position, as is shown in Fig. 2, and the thread guide 4 must be thrown out of operation. For limiting the paths of the brakes 6 and 7 special arms or the like may be secured to the rods 14 and 15, which can be made so as to be set in different positions for changing the path of the brake.

Preferably the upper ends of the parts 39 and 40 are in the form of edges and the lower ends of the links 30 and 31 are formed with notches. The latter are engaged by the edges of the parts 39 and 40 and prevent the same from sliding off when lifting the links.

I claim herein as my invention:

1. In a knitting frame, the combination with the main knitting mechanism, of at least one additional thread guide, operating means therefor yieldingly connected therewith, a pair of parallel racks adapted to stop the thread guide, a pinion engaging said racks for movement thereof in opposite directions, a pair of pawls and ratchet wheels connected with the pinion for rotation of the same in opposite directions, shiftable links carrying each one of the pawls, a rocker adapted to shift the links, operating means for the rocker, and operating means for the pawls.

2. In a knitting frame, the combination with the main knitting mechanism, of at least one additional thread guide, operating means therefor yieldingly connected therewith, a pair of parallel racks adapted to stop the thread guide, a pinion engaging said racks for movement thereof in opposite directions, a pair of pawls and ratchet wheels connected with the pinion for rotation of the same in opposite directions, shiftable links carrying each one of the pawls, a rocker adapted to shift the links, operating means for the rocker, means to set the links in positions for operation by the rocker, and operating means for the pawls.

3. In a knitting frame, the combination with the main knitting mechanism, of at least one additional thread guide, operating means therefor yieldingly connected therewith, a pair of parallel racks adapted to stop the thread guide, a pinion engaging said racks for movement thereof in opposite directions, a pair of pawls and ratchet wheels connected with the pinion for rotation of the same in opposite directions, shiftable links carrying each one of the pawls, a rocker adapted to shift the links, operating means for the rocker, automatically controlled means to set the links in positions for operation by the rocker, and operating means for the pawls.

4. In a knitting frame, the combination with the main knitting mechanism, of at least one additional thread guide, operating means therefor yieldingly connected therewith, a pair of parallel racks adapted to stop the thread guide, a pinion engaging said racks for movement thereof in opposite directions, a pair of pawls and ratchet wheels connected with the pinion for rotation of the same in opposite directions, shiftable links carrying each one of the pawls, a rocker adapted to shift the links, operating means for the rocker, means to set either one of the links in positions for operation by the rocker, and operating means for the pawls.

5. In a knitting frame, the combination with the main knitting mechanism, of two additional thread guides, means for imparting a reciprocating motion to said guides, a carrying member for at least one of the said additional thread guides, an adjustable connection between said reciprocating means and said carrier adapted to change the position of said carrier relatively to said reciprocating means, and automatic means for varying the stroke of the additional thread guides at both ends of the stroke.

In testimony that I claim the foregoing as my invention, I have signed my name in presence of two subscribing witnesses.

FRANZ CECKA. [L. S.]

Witnesses:
F. E. STEGER, [L. S.]
W. H. MÜCKE. [L. S.]

474B

F. CECKA.

HOSIERY FRAME.

APPLICATION FILED OCT. 16, 1915.

1,217,411. Patented Feb. 27, 1917.

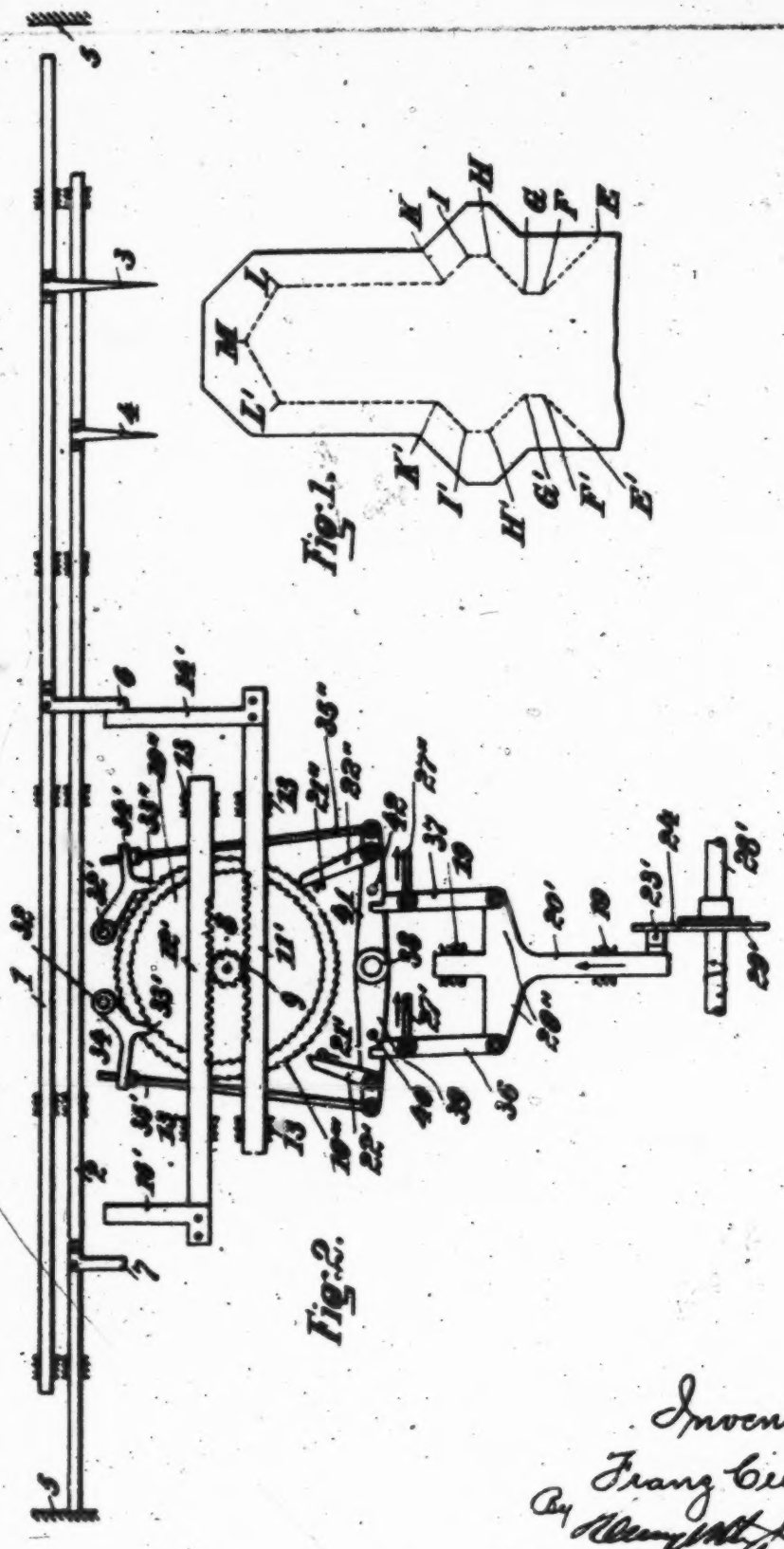

Fig. 1.

Fig. 2.

Inventor
Franz Cecka.
By [signature] Atty

UNITED STATES PATENT OFFICE.

FRANZ CECKA, OF CHEMNITZ, GERMANY, ASSIGNOR TO THE FIRM OF SCHUBERT & SALZER MASCHINENFABRIK, AKTIENGESELLSCHAFT, OF CHEMNITZ, GERMANY.

HOSIERY-FRAME.

1,217,411. Specification of Letters Patent. Patented Feb. 27, 1917.

Original application filed July 22, 1914, Serial No. 852,417. Divided and this application filed October 16, 1915. Serial No. 56,287.

To all whom it may concern:

Be it known that I, FRANZ CECKA, a citizen of the German Empire, residing at Chemnitz, in the Kingdom of Saxony, Germany, have invented certain new and useful Improvements in Hosiery-Frames; and I do hereby declare the following to be a full, clear, and exact description of the invention, such as will enable others skilled in the art to which it appertains to make and use the same, this being a division of my application, Serial No. 852,417, filed July 22, 1914.

My invention relates to improvements in hosiery frames, and more particularly in the mechanism for reducing and increasing the inward stroke of the thread guide.

When making reinforced portions in knitted goods on flat hosiery frames the inward stroke of the thread guide is limited by means of fixed stops which correspond to the desired breadth of the reinforced portion. By means of such a mechanism only reinforced portions can be made which have straight border lines, while it is not possible to make fancy reinforced portions.

In my copending application Serial No. 852,417 I have shown and described a mechanism by means of which fancy reinforced portions can be made such mechanism consisting in a pair of stop members each adapted to arrest either one of a pair of thread guides and formed on adjacent sides with rack teeth, a pinion arranged between said stop members engaging in the teeth of the racks so as to shift the stop members in opposite directions upon being operated by a pawl and ratchet mechanism. However, with the mechanism described in the said application only such reinforced portions can be made in knitted goods which are of equal breadth all over. In order to be able to gradually increase the reinforced portions to any desired point and to reduce them thereafter and, if desired, increase them again, the mechanism disclosed in said application has to undergo a certain change which shall hereinafter be explained.

The preferred form of a mechanism according to the present invention is represented in the drawings affixed to this specification,

Figure 1 being a diagrammatical view showing the heel and sole of a stocking made with reinforced portions, and

Fig. 2 a front view showing the modified form of the mechanism by means of which reinforced portions of the form shown in Fig. 1 can be made, in which the breadth of the reinforced portions is increased, from the point E to the point F, and from E′ to F′, whereupon the breadth remains unchanged along the lines F—G and F′—G′, and finally the border lines of the reinforced portions are directed outward and at an angle to the line F—G along the lines G—H and G′—H′ according to the increase in the breadth of the blank. Thereafter the border lines follow parallel lines H—I and H′—I′, whereupon they are again directed angularly and inward along the lines I—K and I′—K′. Thereafter they follow parallel lines K—L and K′—L′, and finally they are directed angularly and toward the middle M of the blank.

In addition to the usual thread guides provided for knitting the non-reinforced parts of the work thread guides 3 and 4 are provided, which coöperate with the said usual thread guides in knitting reinforced portions, as is known in the art. For clearness sake only the thread guides 3 and 4 have been shown, which are secured in the usual way to thread guide bars 1 and 2. The strokes of the bars 1 and 2 are limited at the outer side of the frame by means of stop members 5. To the thread guide bar 1 a stop arm 6 is secured and to the thread guide bar 2 a stop arm 7.

To a shaft 8 a pinion 9 is keyed which is rigidly connected with ratchet wheels 10″ and 10‴ the diameters of which are larger than that of the pinion. The teeth of the wheels 10″ and 10‴ are cut in opposite directions. The pinion 9 is in mesh with racks 11′ and 12′ which are guided in suitable bearings 13. The racks 11′ and 12′ which are in engagement with the pinion 9 are each provided with a single stop 14′ and 16′ respectively mounted at opposite ends of the racks. A push rod 20′ slidably mounted in suitable guides is constructed with transverse arms 20″, 20″ to which push arms 36 and 37 are jointed which are connected with links 27′ and 27″ respectively.

To the lower end of the push member 20' a pivot bolt 23' is secured which provides a support for a sleeve 24' which is non-shiftable thereon and is always in the path of a cam 29' keyed to a shaft 28'.

On a pivot bolt 38 a rocking lever is mounted which consists of two arms 39 and 41. To the arm 39 of the said rocking lever a pin 40 is secured which is [illegible] position for engagement by the push rod 36, and to the arm 41 of the lever a pin 42 is secured which is in position for engagement by the push rod 37. The arm 39 carries a pawl 22' which bears on a pin 21', and the arm 41 carries a pawl 22'' which bears on a pin 21''. Normally the ratchet wheels 10'', 10''' are locked as against rotation in both directions by means of the pawls 33' and 33'', and they are adapted to be released upon operation of the arm 39 or 41 by rods 35' and 35''.

The operation of the mechanism is as follows:

By means of the cam 29' the push member 20' is continuously reciprocated in vertical direction. The push rods 36 and 37 are normally in such positions, that they do not engage the pins 40 and 41. By means of a suitable counting mechanism such as a jacquard pattern, a narrowing chain, or the like, the push rods 36 and 37 can be rocked to the right and in the direction of the arrow shown in Fig. 2. For example, if the push rod 36 is shifted to the right by the link 27', it engages the pin 40 of the arm 39 when the push rod 20' is moving upward. Thereby the pawl 22' is forced toward the ratchet wheel 10''' so as to advance the same. Thereby the rod 11' is shifted to the left and the rod 13' to the right, so that the stops 14' and 16' are approached to each other, the thread guide bar 1 can move farther to the left and the thread guide bar 2 farther to the right, and the thread guides 3 and 4 are moved toward each other. Thereby the reinforced portions E—F and E'—F' can be made the border lines of which are directed at an angle inward.

If on the other hand the push member 37 is shifted to the right by means of the link 27'', it acts on the pin 42 of the arm 41, and the pawl 22' turns the gear wheel 9 in the opposite direction, so that the stops 14' and 16' of the rods 11' and 13' are separated from each other and the inward strokes of the thread guide bars are shortened. Thereby the reinforced portions can be made so as to be directed with their border lines angularly and outward, as is shown in the [illegible]. It will readily be understood that by setting the counting mechanism the stops can be moved in one or the other direction or stopped according to the desired form of the reinforced portion.

I claim herein as my invention:

1. In a hosiery frame, the combination with a pair of thread guides having reciprocating movements in opposite directions, of a pair of parallel rods each having a stop arranged for coöperation with one of the thread guides and formed on adjacent sides with rack teeth, a pinion engaging said rack teeth and adapted to shift the rods in opposite directions, pawl and ratchet mechanisms, adapted to rotate said pinion in opposite directions, operating means moving in one direction, and means to connect said operating means with either one of the pawl and ratchet mechanisms.

2. In a hosiery frame, the combination with a pair of thread guides having reciprocating movements in opposite directions, of a pair of parallel rods each having a stop arranged for coöperation with one of the thread guides and formed on adjacent sides with rack teeth, a pinion engaging said rack teeth and adapted to shift the rods in opposite directions, pawl and ratchet mechanisms adapted to rotate said pinion in opposite directions, operating means moving in one direction, a rocking lever carrying said pawls at opposite sides of its fulcrum, and means to throw said operating means into position for rocking engagement with said rocking lever at either one of its ends.

In testimony whereof I hereunto affix my signature in the presence of two witnesses.

FRANZ CECKA.

Witnesses:
W. H. Munchen,
M. Rothe.

476

W. E. CHIPMAN.

KNITTING MACHINE.

APPLICATION FILED NOV. 2, 1910.

1,163,970.

Patented Dec. 14, 1915.

12 SHEETS—SHEET 1.

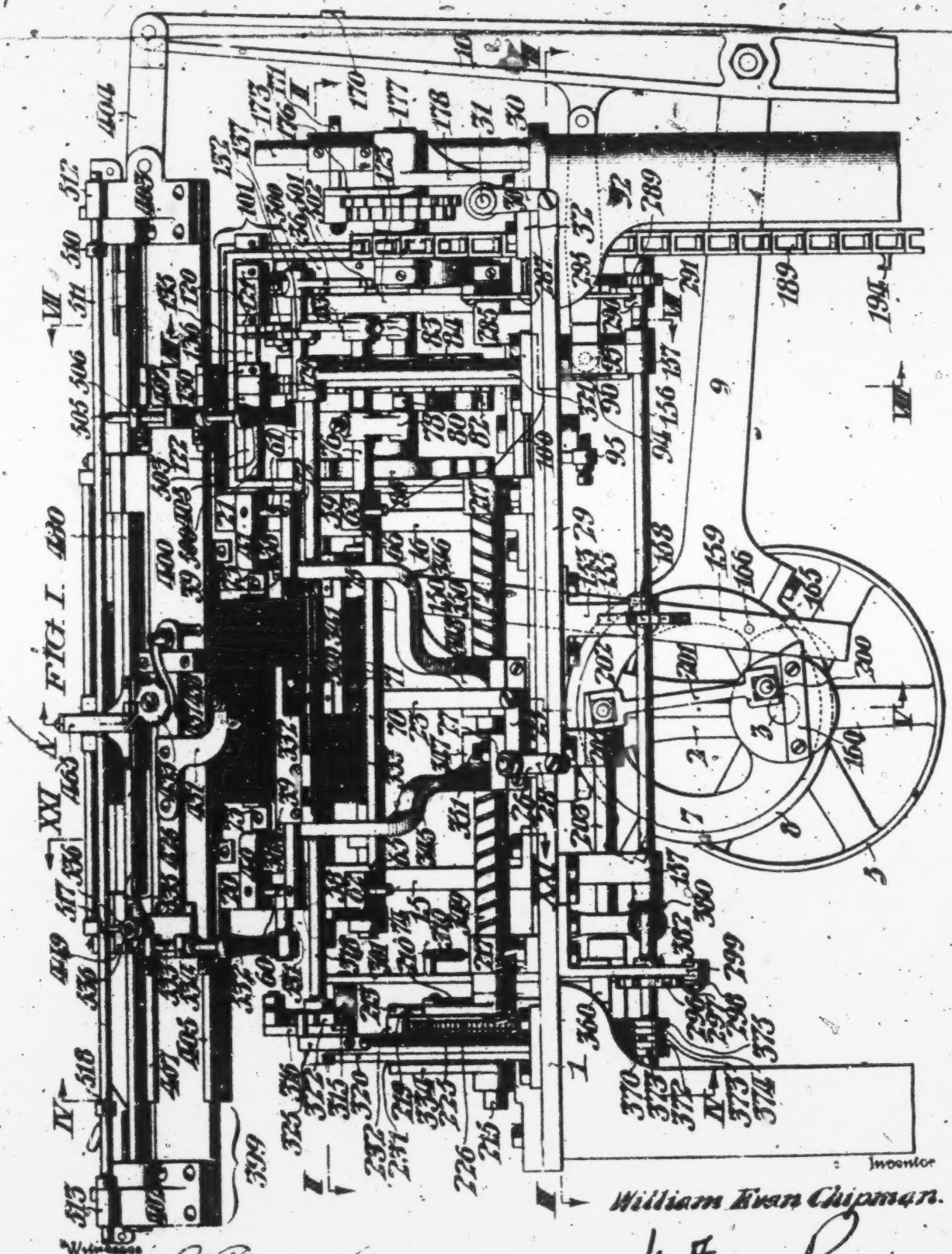

FIG. I.

Witnesses

John C. Bergner

James H. Bell

Inventor

William Evan Chipman.

by Fuller & Paul

Attorneys

477

W. E. CHIPMAN.

KNITTING MACHINE.

APPLICATION FILED NOV. 2, 1910.

1,163,970.

Patented Dec. 14, 1915.

12 SHEETS—SHEET 2.

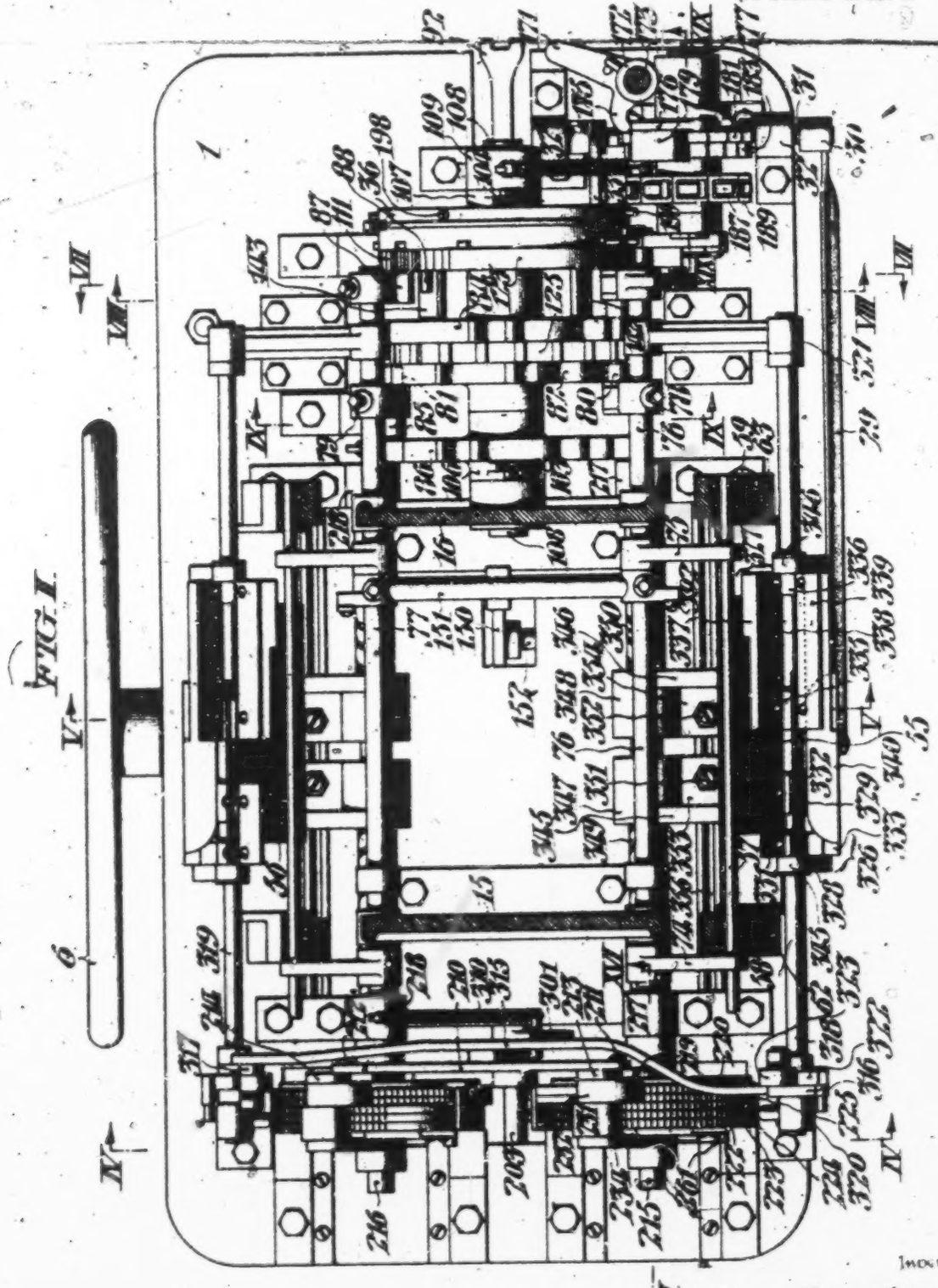

FIG. 4.

Witnesses
John C. Burgess
James H. Bell.

Inventor
William Ewan Chipman.
by Fulwey & Paul
Attys.

478

W. E. CHIPMAN.

KNITTING MACHINE.

APPLICATION FILED NOV. 2, 1910.

1,163,970.

Patented Dec. 14, 1915.

12 SHEETS—SHEET 3.

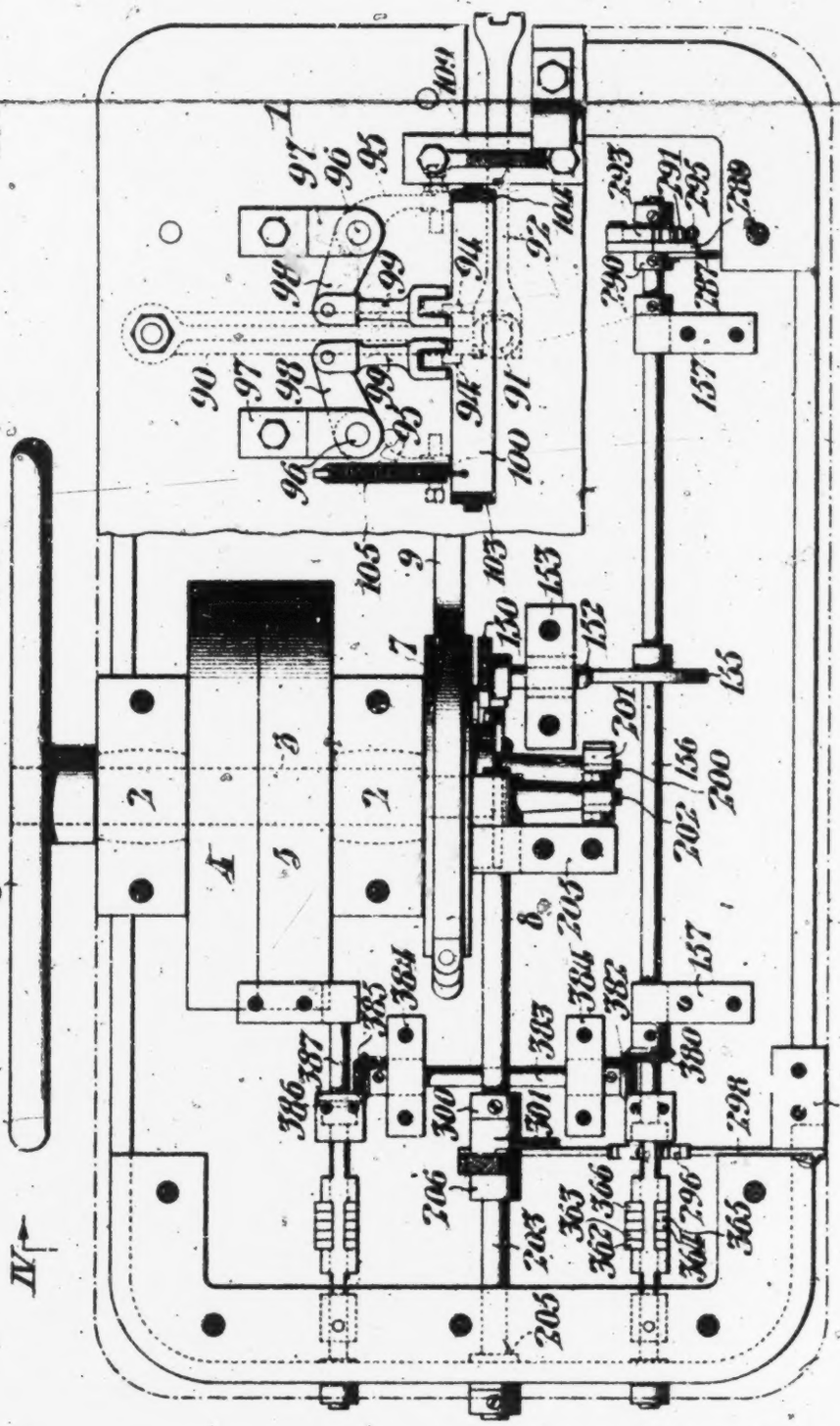

FIG. II.

Inventor

William Evan Chipman.

Witnesses

John C. Bergner

James H. Bell

by Fulley & Paul

Attorneys

479

W. E. CHIPMAN.

KNITTING MACHINE.

APPLICATION FILED NOV. 2, 1910.

1,163,970.

Patented Dec. 14, 1915.

12 SHEETS—SHEET 4.

FIG IV.

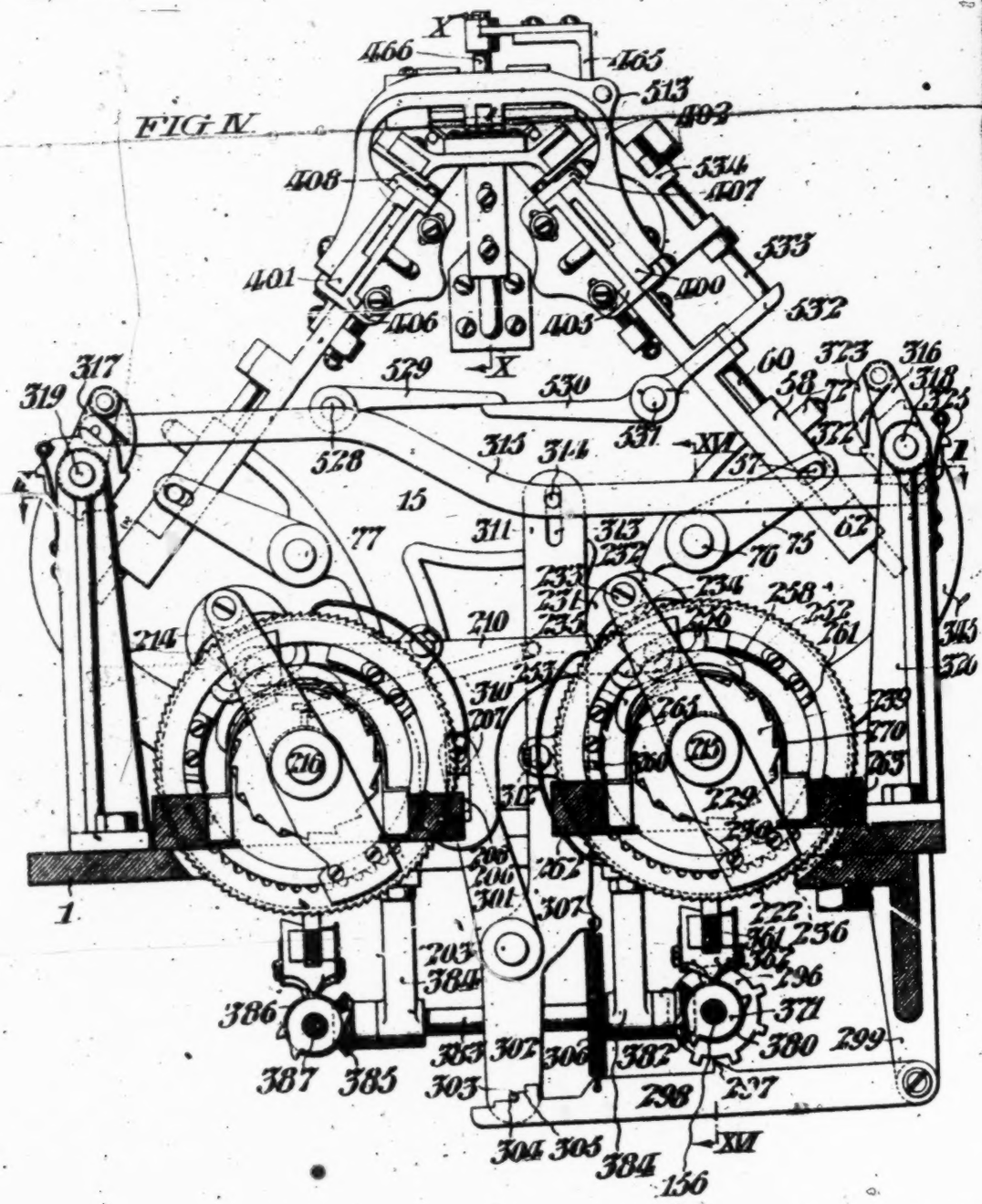

Inventor

William Evans Chipman

by Fitzgerald & Paul

Attorneys

Witnesses

John C. Wagner

James K. Bell

480

W. E. CHIPMAN.

KNITTING MACHINE.

APPLICATION FILED NOV. 2, 1910.

1,163,970. Patented Dec. 14, 1915.

12 SHEETS—SHEET 5.

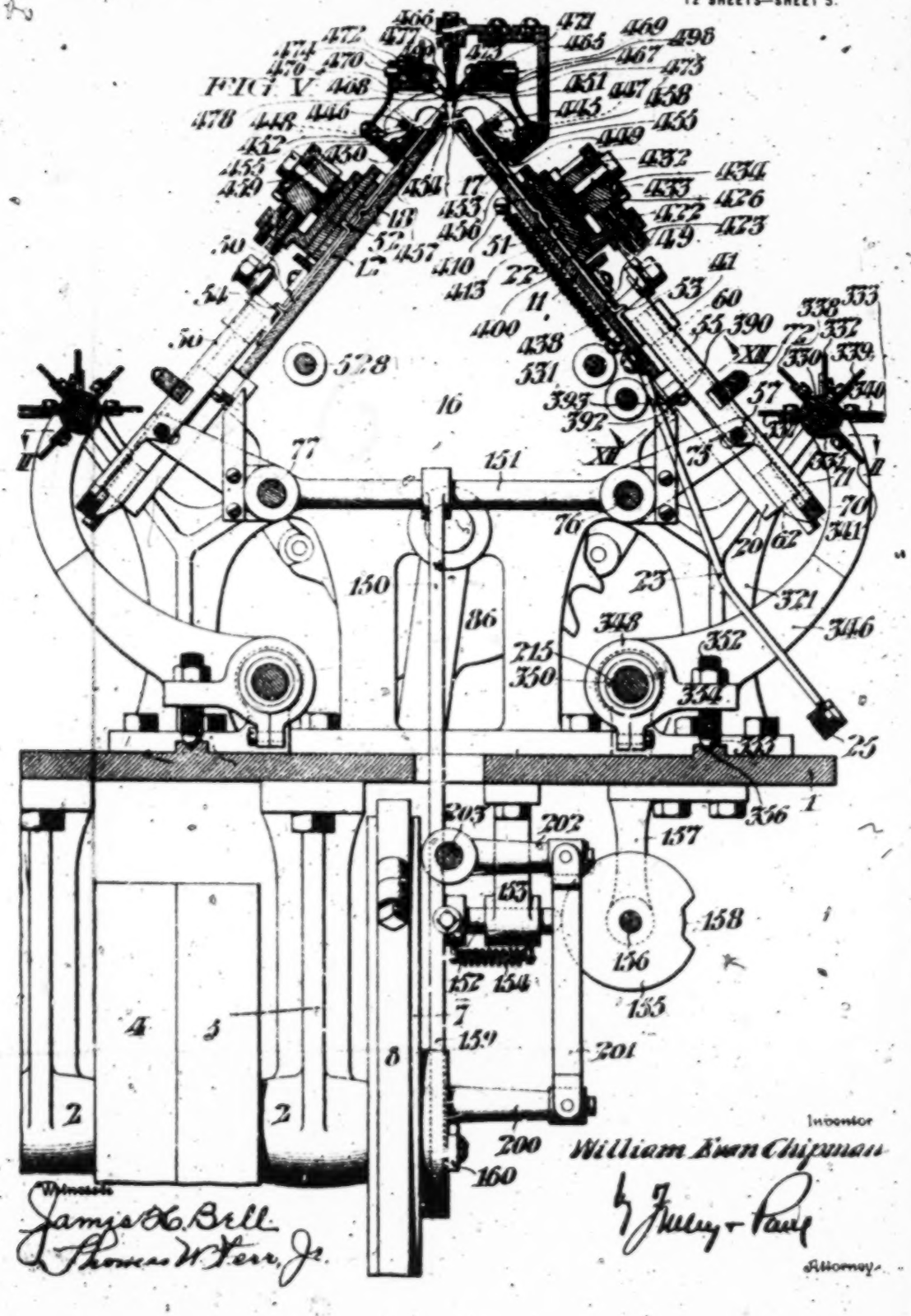

W. E. CHIPMAN.

KNITTING MACHINE.

APPLICATION FILED NOV. 2, 1910.

1,163,970.

Patented Dec. 14, 1915.

12 SHEETS—SHEET 6.

FIG. VI.

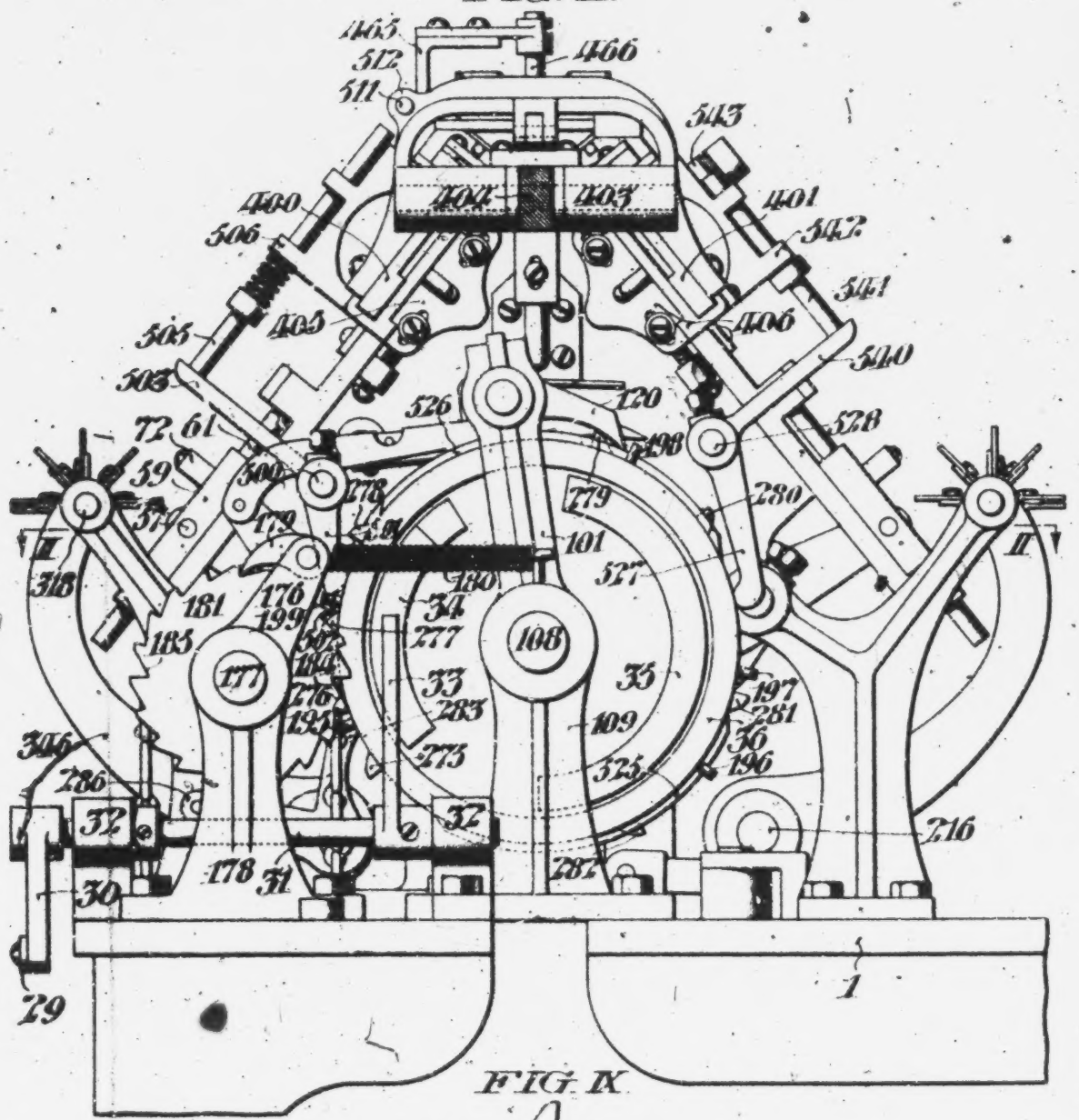

FIG. IX.

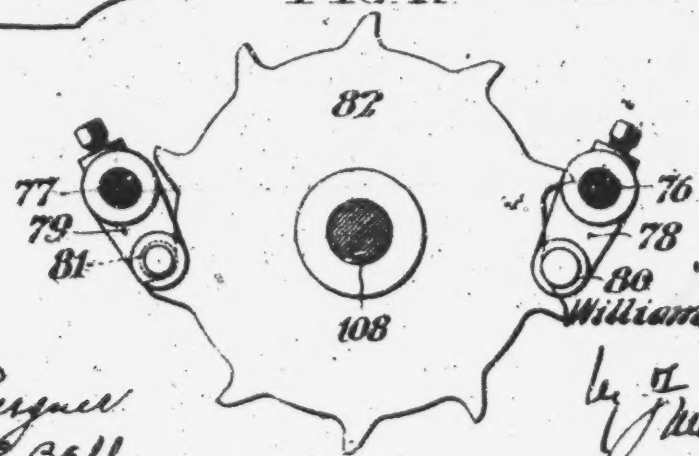

Witnesses
John C. Bergner
James H. Bell

Inventor
William E. van Chipman,
by Wiley & Penny
Attorneys

W. E. CHIPMAN.

KNITTING MACHINE.

APPLICATION FILED NOV. 2, 1910.

1,163,970. Patented Dec. 14, 1915.

12 SHEETS—SHEET 7.

FIG. VII

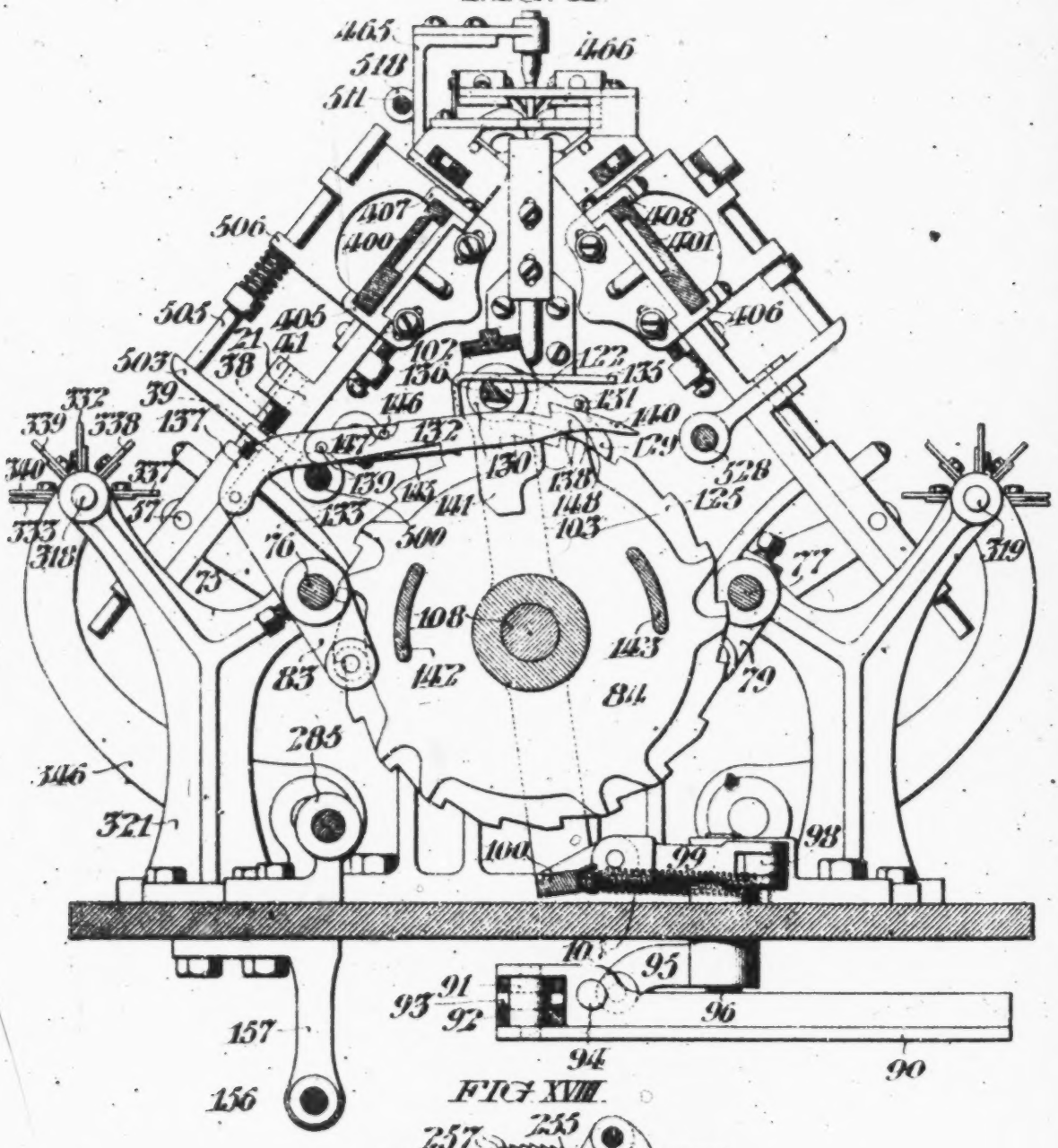

FIG. XVIII

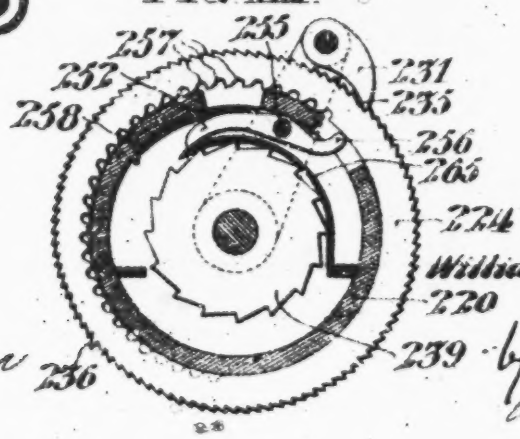

Inventor
William Evan Chipman,
by Fairley & Paul
Attorneys

Witnesses
John C. Bergner
James H. Bell

W. E. CHIPMAN.

KNITTING MACHINE.

APPLICATION FILED NOV. 2, 1910.

1,163,970

Patented Dec. 14, 1915.

12 SHEETS—SHEET 8.

FIG. VIII.

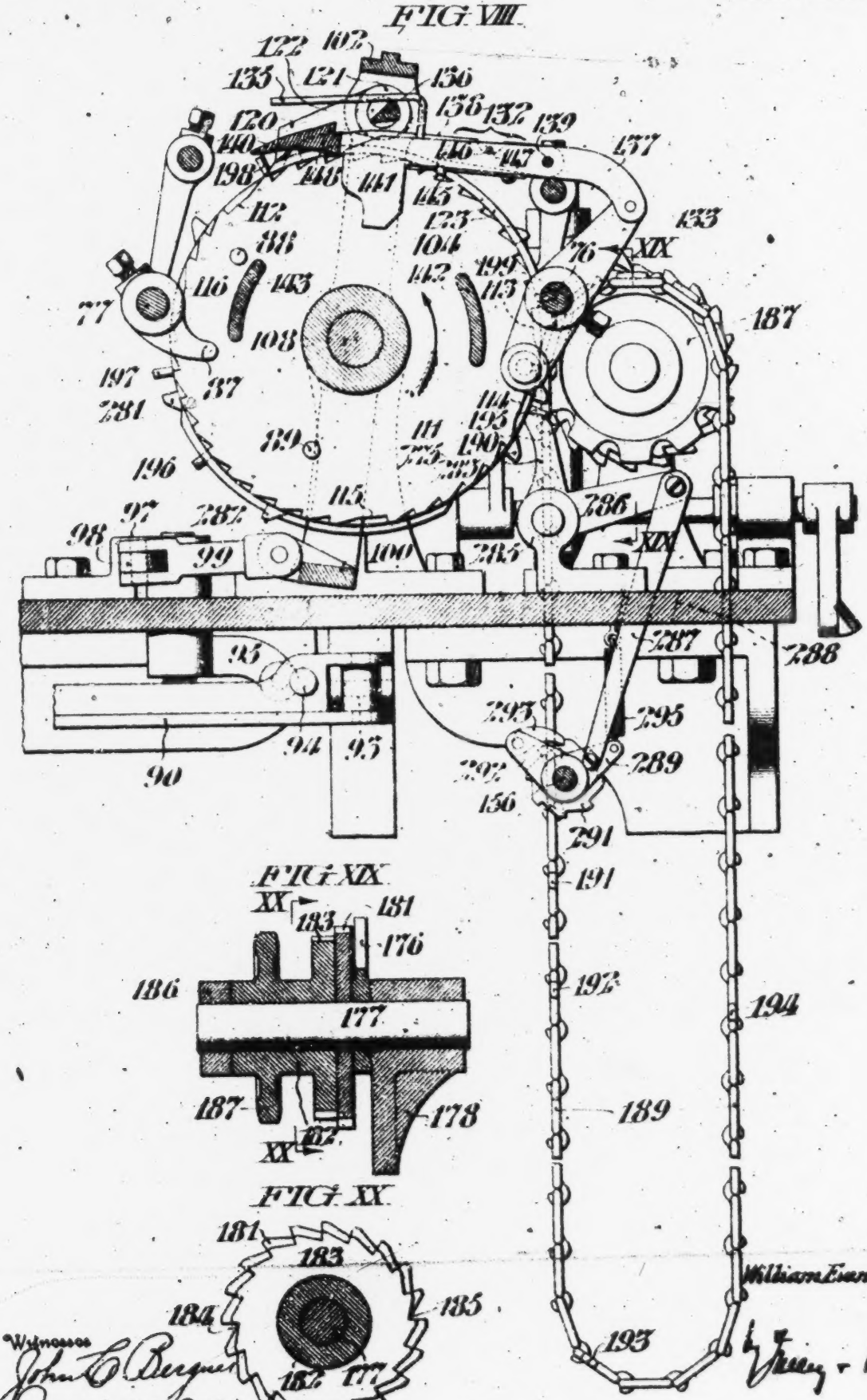

FIG. XIX.

FIG. XX.

Witnesses
John C. Bergner
James H. Bell

Inventor
William Evan Chipman
by Wiley & Paul
Attorneys

W. E. CHIPMAN.

KNITTING MACHINE.

APPLICATION FILED NOV. 2, 1910.

1,168,970.

Patented Dec. 14, 1915.

12 SHEETS—SHEET 9.

FIG. X.

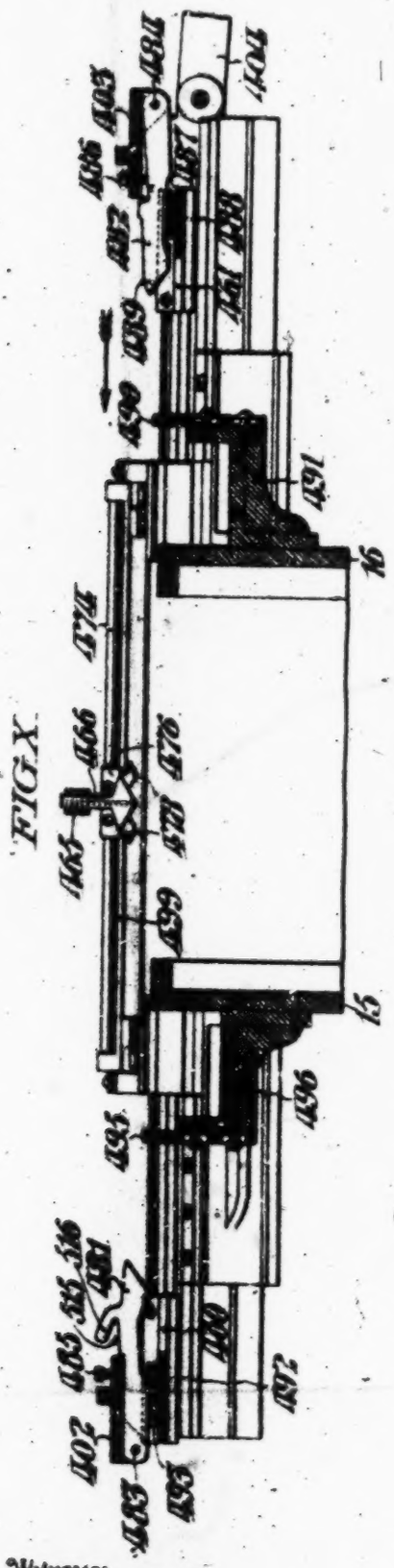

FIG. XI.

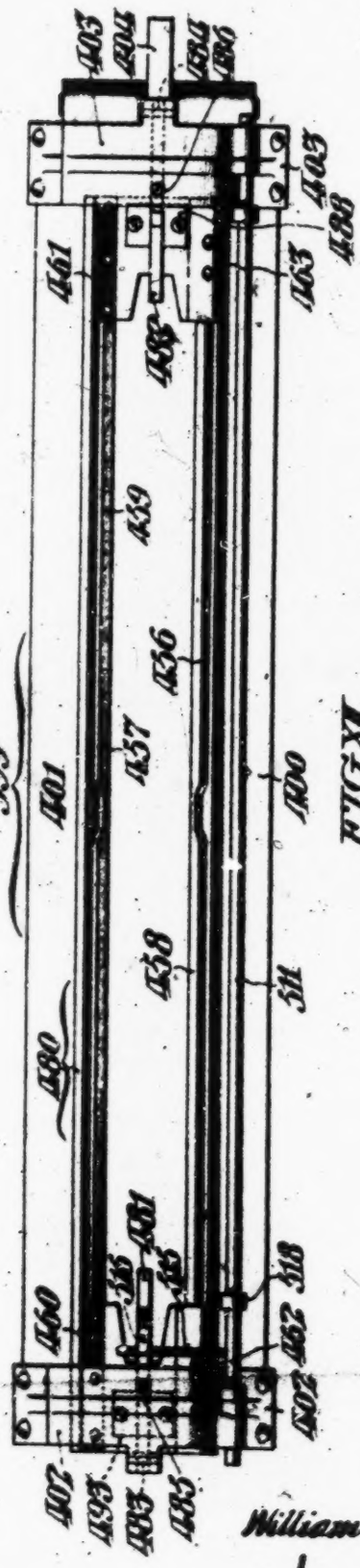

FIG. XI.

Witnesses

John C. Bergner.

James X. Bell.

Inventor

William Evan Chipman,

by Fulley & Page

Attorneys

W. E. CHIPMAN.

KNITTING MACHINE.

APPLICATION FILED NOV. 2, 1910.

1,163,970. Patented Dec. 14, 1915.

12 SHEETS—SHEET 10.

FIG. XIII

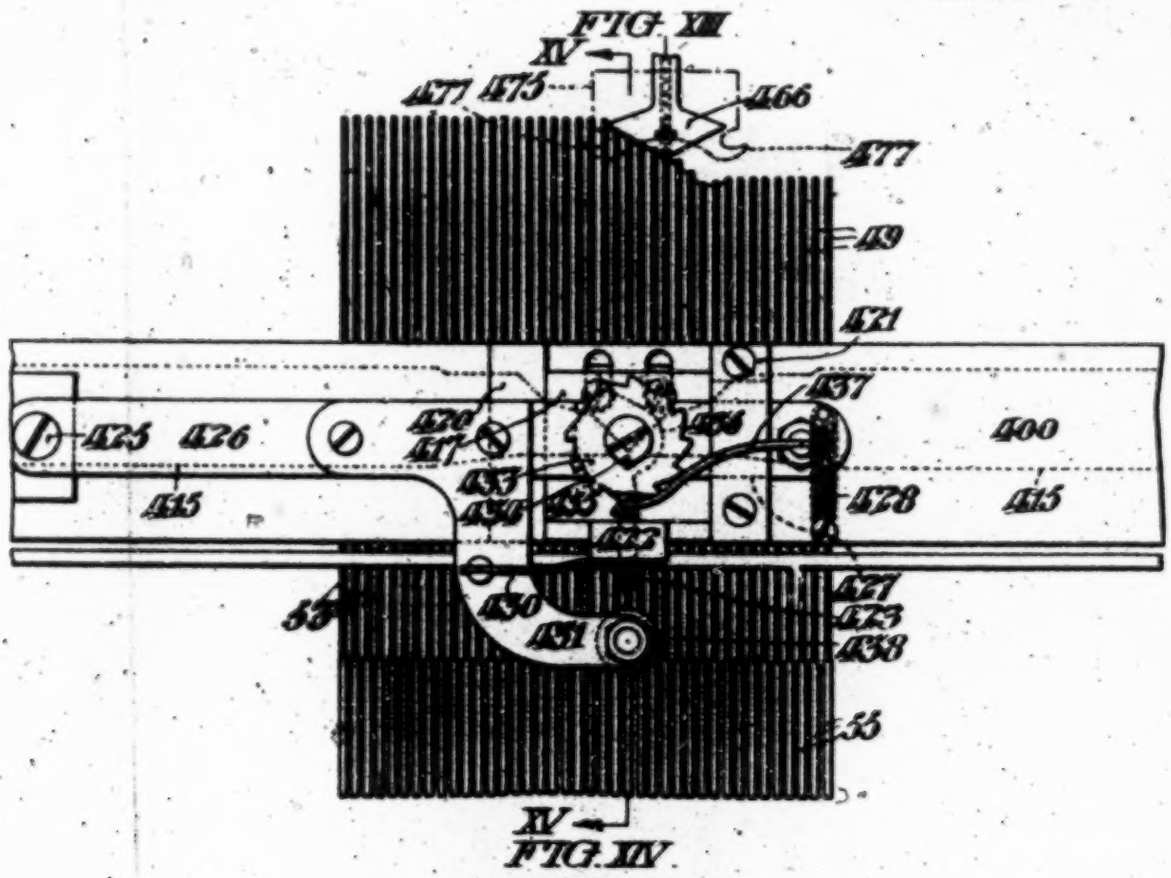

FIG. XIV

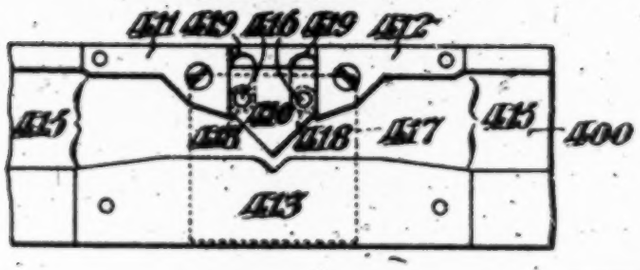

FIG. XV.

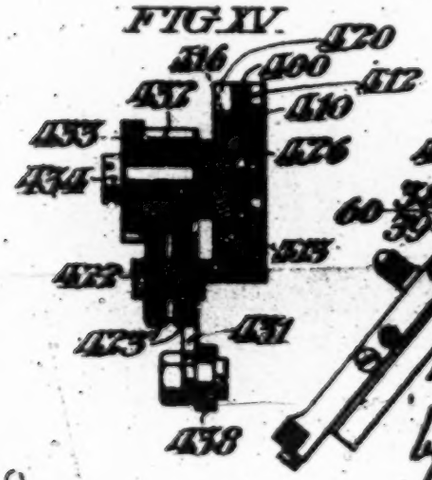

FIG. XXI.

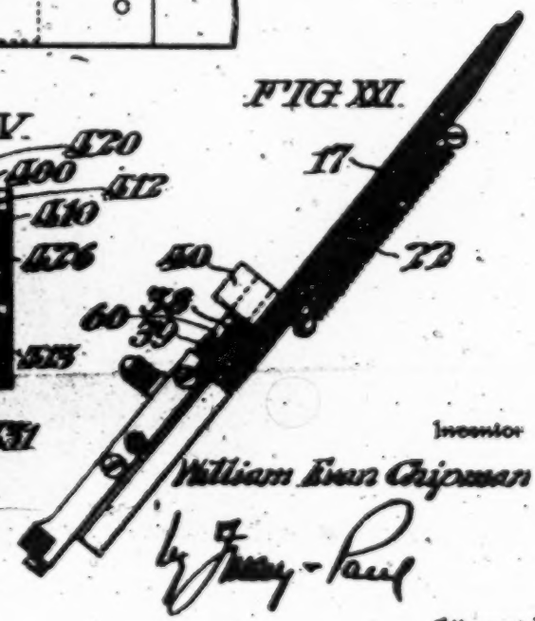

Witnesses

James H. Bell

Thomas W. Kerr, Jr.

Inventor

William Evan Chipman

by Fenney & Paul

Attorneys

486

W. E. CHIPMAN.

KNITTING MACHINE.

APPLICATION FILED NOV. 2, 1910

1,163,970.

Patented Dec. 14, 1915.

12 SHEETS—SHEET 11.

FIG. XVI.

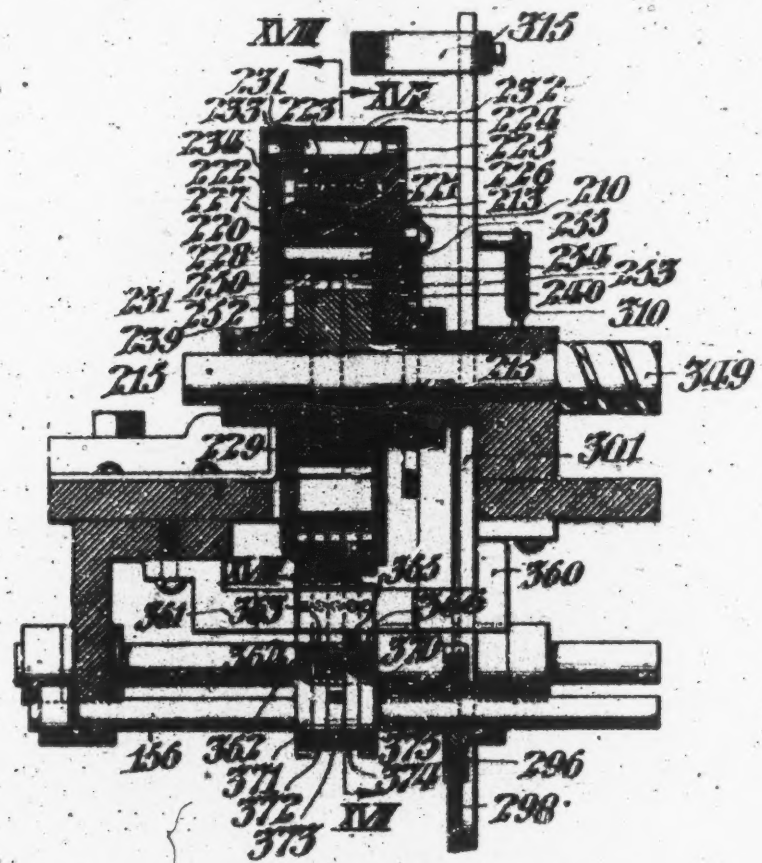

FIG. XVII.

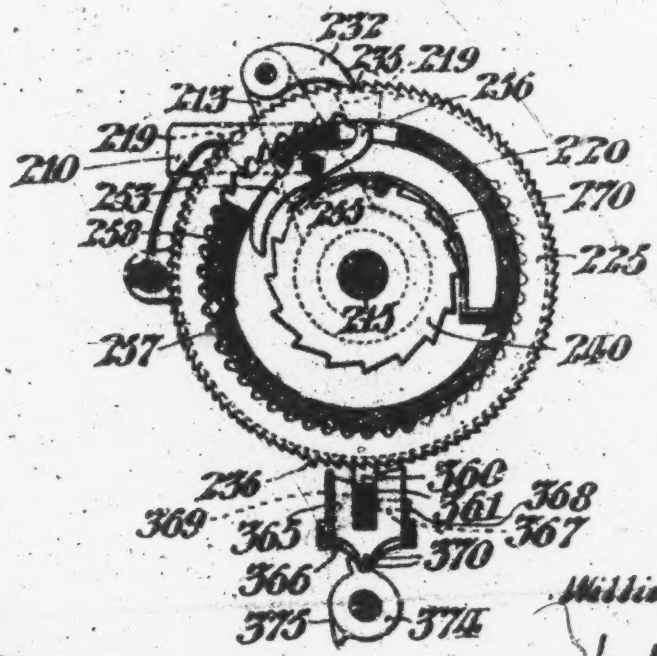

Witnesses

John C. Bergner

James H. Bell.

Inventor

William Evan Chipman,

by Fitzgerald & Paul

Attorneys

487

W. E. CHIPMAN.
KNITTING MACHINE.
APPLICATION FILED NOV. 2, 1910.

1,163,970.

Patented Dec. 14, 1915.
12 SHEETS—SHEET 12.

FIG. XXII.

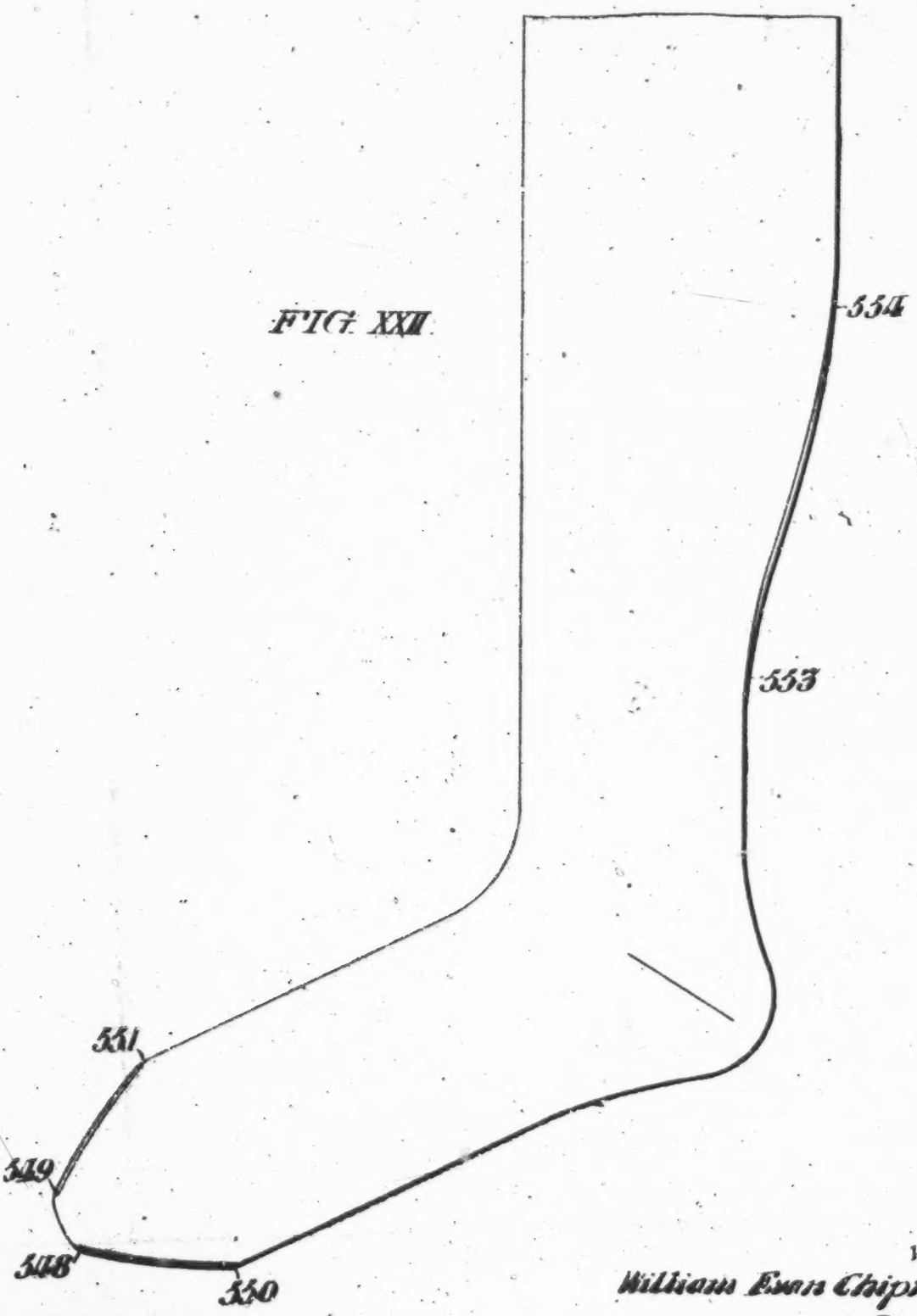

Witnesses
James H. Bell
Thomas W. Fern, Jr.

Inventor
William Evan Chipman,
by Fulley & Penn
Attorneys

UNITED STATES PATENT OFFICE.

WILLIAM EVAN CHIPMAN, OF EASTON, PENNSYLVANIA.

KNITTING-MACHINE.

1,163,970. Specification of Letters Patent. Patented Dec. 14, 1915.

Application filed November 2, 1910. Serial No. 590,143.

To all whom it may concern:

Be it known that I, WILLIAM EVAN CHIPMAN, of Easton, in the county of Northampton and State of Pennsylvania, have invented certain new and useful Improvements in Knitting-Machines, whereof the following is a specification, reference being had to the accompanying drawings.

The invention relates to new and useful improvements in knitting machines, and more especially to straight knitting machines wherein two straight rows of inclined needles are used in knitting a tube which may be fashioned to form a stocking.

Where tubular fabrics are knit on a machine of the above character, and the tube is widened by bringing into action one or more needles, holes are formed in the fabric at the widened portion, which makes an objectionable stocking. In order to overcome this objection, and to strengthen the stocking at the widened portion, an object of the present invention is to provide mechanism for knitting a strengthening gore which may be joined with the stitches that are united to form the widened portions of the stocking.

A further object of the invention is to provide a knitting machine of the above character with cam wheels for raising and lowering the needles, which cam wheels are controlled by a change cam which in turn is controlled by a pattern chain.

A further object of the invention is to provide a machine of the above character with individual jacks for raising the needles, and stitch cams for depressing the needles to form the stitches.

A further object of the invention is to provide fashioning plates for controlling the jacks, which raise and lower the needles, which fashioning plates operate during the formation of the toe and the heel and the widened portion of the leg of the stocking.

These and other objects will in part be obvious, and will in part be hereinafter more fully described.

In the accompanying drawings Figure I, is a side elevation of a fashioning knitting machine conveniently illustrating my improvements. Fig. II, is a sectional view on line II, II, in Fig. I. Fig. III, is a similar view on a lower plane, as indicated at III, III, in Fig. I. Fig. IV, is a vertical cross sectional view taken on the line IV, IV, of Figs. I and II. Fig. V, is a staggered central cross section indicated at V, V, in Figs. I and II. Fig. VI, shows an end elevation of the machine, looking from the right in Figs. I and II. Fig. VII, is a vertical cross section, indicated by line VII, VII, in Figs. I and II. Fig. VIII, is a similar view, looking in the opposite direction, as shown at VIII, VIII, in Figs. I and II. Fig. IX, is a detail cross section on line IX, IX, in Fig. II. Fig. X, illustrates a fragmentary longitudinal section through the upper portion of the machine, as shown by the arrows X, X, in Fig. IV. Fig. XI, is a plan view, showing the relative positions of the needle cam bars and the sinker cam bars. Fig. XII, is a detail sectional view on line XII, XII, in Fig. V. Fig. XIII, shows in detail one of the actuating mechanisms for the stitch cams. Fig. XIV, is a fragmentary elevation of the inner face of one of the needle cam bars at the stitch-forming point. Fig. XV, is a cross section through the needle cam bar, as indicated at XV, XV, in Fig. XIII. Fig. XVI, shows a detail cross section of one of the mechanisms which control the variation of the number of needles during fashioning; this view is indicated at XVI, XVI, in Figs. II and IV. Figs. XVII and XVIII, are vertical sectional views taken on lines XVII, XVII, and XVIII, XVIII, in Fig. XVI, respectively. Fig. XIX, is a detail sectional view on the line XIX, XIX, of Fig. VIII. Fig. XX, is a cross section on line XX, XX, of Fig. XIX. Fig. XXI, is a detail sectional view taken on the line XXI, XXI, in Fig. I, showing one of the screws for limiting the movement of the needle bed, and the spring tending to raise the said bed. Fig. XXII, is a diagrammatic view, showing the stocking knit according to my invention.

In carrying out my invention, I have provided a framework on which is mounted two needle beds, each of which is provided with a straight row of needles. The needles are raised by individual jacks, and are lowered by stitch cams which reciprocate back and forth across the needle beds. The individual jacks are in turn controlled by pattern mechanism so they may be raised to render the jacks ineffective. Each of the sets of jacks is raised and lowered by rock shafts, which are controlled by cam wheels, and these cam wheels are in turn controlled by a change

drum that is rendered effective or ineffective by a pattern chain. This mechanism is preferably intended for knitting a stocking beginning at the toe of the stocking and finishing at the top thereof. In the knitting of the stocking, the needles on both the needle beds are raised and the thread laid into the hooks of the needles, after which the needles on one bed remain idle while a plurality of courses are knitted on the other bed. Then sufficient needles for the beginning of the toe are thrown into action on both beds, and the toe of the stocking knitted and widened and the widening stitches joined with the subsequently knitted courses, which form a strengthening gore for the widened portion of the toe. After the knitting of the toe of the stocking, the foot portion thereof is knit in the usual way. The manner of knitting the heel of the stocking will be described in detail later on. A strengthening gore is knit for the widening portion in the leg of the stocking, in a manner similar to that of the widened portion of the toe.

Taking up the description more in detail, the machine will be described under different headings, for the sake of clearness.

I. The driving mechanism.—In the figures 1, represents the bed plate of the machine, mounted upon suitable legs or standards, and to which are bolted the depending bearing brackets 2, 2, wherein is journaled the main or driving shaft 3. The said shaft 3, carries the usual tight and loose pulley 4, and 5, respectively, and on its other end a hand wheel 6. Secured to the inner end of said shaft is an eccentric 7, having a strap 8, whose rod 9, is pivoted at its outer end to a vertical rocker arm 10, which imparts reciprocatory motion to the thread carrier and to various other parts of the machine. The said rocker arm 10, is fulcrumed at its lower end to the framework of the machine at a point not illustrated in the drawings.

II. The needle beds.—According to my invention, the needles are equally divided and located on opposite sides of the machine, as at 11, and 12, in suitable needle beds. In the motion of the machine in one direction, the needles knit on one side of the machine, and in the return stroke, the needles upon the opposite side become active. In this manner a complete course is knit, upon a tube, and each reciprocation or movement back and forth of the machine corresponds exactly to a rotation of a circular machine. In other words, each set of needles knits a flat web, and each of the flat webs is fashioned and united at the region of the end needles of the two series.

As the needle beds are identical in many respects, it will be only necessary to describe one of them, designating only such of the common parts on the other side as are deemed absolutely necessary to the clear understanding of the operation. For convenience, the side to the right of Figs. IV and V, or that illustrated in Fig. I will be described in detail.

Bolted to the top of the bed plate 1, are standards 15, and 16, which are inclined toward their tops and support the needle bed plates 17 and 18 as best shown in Fig. V. The bed plate 18 is rigidly secured to the standards 15, and 16, but the bed plate 17, is capable of a slight longitudinal motion, so that the needles may be raised and their knitting position brought closer to the other needles. The said plate 17, is mounted between guides 20, and 21, which are respectively secured to the standards 15, and 16, as best shown in Fig. I. Plate 17, is subject to the pull of tension springs 22, which tend to keep it in its upper position. Secured to the back of the said plate 17, is a link 23, whose other end is pivotally connected to one arm 25, of a bell crank lever 26, which is fulcrumed upon a stud 27, on the top of the bed plate 1. The other arm 28, of the bell crank lever 26, is connected by means of a link 29, to the outer end of an arm 30, mounted upon a counter shaft 31, at the right hand end of the machine, as seen in Fig. I. Shaft 31, is journaled in brackets 32, bolted to the top of the bed plate, and carries near its inner end a cam finger 33, which is adapted to be engaged by cams 34, and 35, on the side of a rotatable drum 36, see Fig. VI. The springs 22, already mentioned, which exert their influence upon the needle bed plate 17, also serve to maintain the cam finger 33, in engagement with its cams 34 and 35. When the drum 36, is rotated and the finger 33, allowed to drop into the gaps between its cams 34, and 35, the needle bed is then pulled up by its springs 22, as will be readily understood. The amount of motion of the needle bed 17, is, however, limited by means of adjustable set screws 38, which are mounted in lugs 39, projecting laterally from the bottom edge of the said bed, and which engage extensions 40, and 41, secured to the guides 20, and 21, respectively, (see Figs. I and XA1).

III. Mechanism for the independent control of needles.—Bed plates 17, and 18, as best shown in Fig. V, are provided with the usual grooves for the guidance of their respective needles 49, and 50, having upper butts 51, and 52, which are adapted to be engaged by the knitting cams, and lower butts 53, and 54, which are adapted to be engaged by individual jacks or fingers and thereby raised to the knitting level. Each of the series of needles 49, and 50, is controlled by a series of jacks 55, and 56, respectively, which correspond in number to the needles, and are likewise equally divided on each side of the machine. Jacks 55, corresponding to needles 49, are fulcrumed

upon a rod 57, which is mounted in slide blocks 58, and 59, moving upon suitable guides 60, and 61, which are respectively secured in lugs 62, and 63, projecting from the guides 20, and 21, previously mentioned. See Figs. I and V. Slide blocks 58, and 59, are provided with lateral extensions 65, and 66, to the free ends of which is secured a cross bar 70, provided with slots to maintain the lower ends 71, of the jacks 55, in proper alinement. Each alternate jack is steadied in its motion by means of the slots in bar 70. The remaining alternate jacks are guided by a second slotted cross bar 72, which bridges the top of slide blocks 58, and 59. The jacks 55, are further guided at their upper ends between a pair of angle plates 73, which are secured to needle bed 17, and prevent any lateral motion of the jacks, as best seen in Fig. I. The upper or heavy ends of the jacks 55, and 56, normally rest upon the needle bed in readiness to engage the lower butts of the needles.

In the process of knitting according to my invention, the whole series of jacks on one side of the machine are moved bodily upward by means of a pair of arms 74, and 75, which are slotted at their outer ends to engage the fulcrum rod 57, and are secured to a rock shaft 76, which is journaled in the standards 15, and 16. A similar rock shaft 77, lifts the series of jacks on the other side of the machine. Secured to the shaft 76, slightly to the right of the standard 16, is an arm 78, carrying a roller 80, on its free end, which roller normally engages a cam wheel 82, (see Figs. II and IX). The shaft 77, on the other side of the machine carries an arm 79, having a roller 81, which likewise engages the cam wheel 82. The cam projections on said cam wheel operate first on one rock shaft 76, and then on the other rock shaft 77, and consequently lift the needle jacks first on one side and then on the other.

During the formation of the heel of the stocking, the rock shafts 76, and 77, are shifted to the left, as viewed in Fig. II, thereby moving the rollers 80, and 81, out of the path of the cam wheel 82. The rock shaft 76, carries a second arm 83, that is provided with a roller which by the shifting of the shaft is brought into engagement with a second cam wheel 84, which has double cam projections, as shown in Fig. VII. The arm 79, on the rock shaft 77, has a second roller 85, that during the shift is brought into engagement with the cam wheel 86, having double cam projections similar to the cam projections on the cam wheel 84. These double cam wheels 84, and 86, will lift the needle jacks twice on one side of the machine and then twice on the other side thereof. The shaft 77, is also provided at its right hand end with a finger 87, which lies in the path of a pair of pins 88, and 89, on the left side of a ratchet wheel on the same shaft as drum 36. See Fig. VIII. When these pins engage the finger 87, the shaft 77, is rocked, and the needles on the front of the machine raised. This occurs during the starting of the toe of the stocking. The pins only lift the needles slightly above the hooks of the needles at the rear of the machine, which are at this time raised, and, therefore, a thread can be laid into the hooks of all the needles both at the front and rear of the machine. The needles which are to be lifted during the raising of the jacks, may be controlled by moving the jacks from operative engagement with the needles. By means of the individual jacks for the needles, their knitting may be controlled in the following manner: When the lower ends of the jacks 56, are pressed inwardly by a mechanism which will be explained later, their upper heavy ends will be raised from the path of the lower butts 54, of the needles 50. The jacks thus acted upon will be ineffective upon their corresponding needles in raising them to the stitch level. In this manner, certain needles may be thrown into or out of action, the stocking fashioned and the heel knit.

IV. The controlling drum and its adjunctive parts.—Fulcrumed to the under side of the bed plate is a lever 90, best shown in Figs. III, and VII, whose free bifurcated end carries a rotatable stud 91, which is embraced by the bifurcated end of a link 92, and is movably secured thereto by means of a pin 93, thereby forming a sort of a universal joint, (see Figs. I, III and VIII). The other end of the link 92, is pivoted to the rocker arm 10, at a point somewhat above that at which the eccentric rod 9, is secured. The lever 90, is, therefore, caused to oscillate in a horizontal plane in synchronism with the rocker arm 10. The lever 90, carries buffers 94, which are adapted to engage adjustable set screws in the free ends of tappet arms 95. The oscillation of the lever 90, causes a similar motion to be imparted to the tappet arms 95, about the vertical pins 96, to which they are secured. The pins 96, extend through bed plate 1, and terminate at their tops in bearing brackets 97. Arms 98, are secured to the pins between the top of the bed plate 1, and the bearing bracket 97, and their outer ends are connected by means of links 99, to the bottom cross bar 100, of a yoke 101, which comprises also a top bar 102, and the side bars 103, and 104, and is subject to the action of a spiral spring 105. (See Fig. III). The said side bars are loosely mounted at 106, and 107, on a horizontal shaft 108, whose left hand end is secured in the standard 16, and the other end in a supporting bracket 109, at the right hand end of the machine, as seen in Figs. II and VI.

The controlling drum 36, previously men-

tioned, is loosely mounted upon the shaft 108, directly adjacent to and at the left of the side bar 104, of the yoke 101. (Figs. I and II). To the left side of the drum 36, is secured a ratchet wheel 111, which is adapted for intermittent rotation, owing to the teeth omitted at 112, 113, 114, 115 and 116. The ratchet is operated upon by a pawl 120, which is loosely pivoted between collars 121, upon a cross rod 122, whose ends are secured in the side bars 103 and 104, of the yoke 101. (See Fig. VIII). A guard 123, which extends over a portion of the periphery of the ratchet wheel 111, prevents excessive pawling thereof, which would otherwise occur, owing to the extent of motion of the yoke 101.

Loosely mounted between the side arm 103, of the yoke 101, and the ratchet wheel 111, is a second ratchet wheel 125, which is disposed between, and supplemented by the cam wheels 82, and 84, above described. The cam projections of the cam wheel 82, which are symmetrically spaced, operate upon the rollers 80, 81, on arms 78, and 79, which are respectively secured to the rock shafts 76, and 77, effecting the motion of the jacks, as already described. This cam wheel 82, is used in knitting the greater portion of the stocking, as will be better understood in the description of the operation of the machine. The cam wheel 86, above described is also secured to the loose sleeve, upon the shaft 108, and is identical with the cam wheel 84, to the right of ratchet wheel 125, in that its teeth are spaced in pairs about its periphery. Cam wheels 84, and 86, are effective during the knitting of the heel pocket of the stocking, as will be more definitely set forth hereafter. The ratchet wheel 125 is adapted to be picked by a pawl 129, also mounted between a pair of collars 130, upon the cross rod 122, of yoke 101.

During a portion of the knitting of the seams at the toe and also that at the region of fashioning of the stocking, the needles at the side of the machine, shown in Fig. I, are used alone. In order to permit this, the ratchet wheel 125, is rendered idle by the temporary lifting of its pawl 129, in the following manner: A pin 131 (see Fig. VII), extends laterally from the pawl 129, and is adapted to be raised by means of a dog 132, which is pivoted to an extension arm 133, of the roller arm 83, at the right hand end of the shaft 78, already mentioned. Normally the dog 132, is actively suspended by means of a guard wire 135, which rests upon the reduced portion 136 of the cross rod 122, supported by the yoke 101.

The dog 132, consists of two parts 137, and 138. The part 138, is bifurcated to receive the part 137, and is pivoted thereto by means of a screw 139. The free end 140 of the part 138, is curved and adapted to engage the pin 131, extending from the pawl 129, and thereby raise it to render it inactive when the cam plate 141, depending from part 137, is engaged by either of the segments 142, or 143, carried on the left side of the ratchet wheel 111. A flat spring 145, is secured to the bottom of the part 137, of the dog 132, and exerts pressure upon the other part 138. A pin 146, on part 137, and notches 147, in the sides of the part 138, coact with spring 145, to keep the said two parts of the dog 132, normally in alinement, but permit them to yield when the cam plate 141, is acted upon by either of the segments 142, or 143, on the ratchet wheel 111, already described. The part 138, of the dog 132, is also provided near its free end with a notch 148, which is adapted to engage the reduced portion 136, of the cross rod 122, of the yoke 101, which is clearly shown in Figs. VII and VIII. When the dog 132, is raised, the pawling of the ratchet wheel 125, is stopped, and the oscillation of the yoke 101, is imparted through the arm 133, to the shaft 76, and the knitting takes place only on the side of the machine shown in Fig. I. When this portion is knit, the shafts 76, and 77, are shifted to the left by means of a lever 150, whose upper end is bifurcated to embrace a tie rod 151, whose ends are secured to collars on the said shafts 76, and 77. See Figs. I and II. The lever 150, is secured to a pin 152, which is capable of being shifted within a bearing bracket 153, (see Fig. V). A spring 154, serves to keep the end of the pin 152, in contact with a rotatable cam 155, on a countershaft 156, journaled in brackets 157, depending from the bottom of the bed plate 1. When the pin 152, is permitted to drop into the slot 158, of the cam 155, the spring 154, causes the lever 150, to be drawn toward the bracket 153. The lower portion 159, of lever 150, is thereby brought into the path of a cam plate 160, which is secured to the hub of the eccentric 7, on the main shaft 3.

The engagement of the cam plate 160, with the lower end 159, of the lever 150, causes its upper end to shift the shafts 76, and 77, to the left, so their respective roller arms 78, and 79, are retracted from the path of the cam wheel 82. The shaft 76, after shifting will be subject to the action of the cam wheel 84, upon its arm 83. Similarly shaft 77, will be subject to the action of cam wheel 86, upon the roller 85, on the left side of arm 79. In order to restore the shifting mechanism to its normal position, the high portion of cam 155, operates to push the lever 150, so that a cam plate 165, at the back of its lower end 159 (Fig. I), is brought into the path of a pin 166, carried upon the side of eccentric 7. The lower end of the lever 150, is thereby pulled toward the main shaft 3, and results in the shifting of the

shafts 76, and 77, to the right to restore the parts to the position illustrated in the drawings.

V. The measuring chain.—Referring more particularly to Figs. I, II, VI and VIII, near its top, the rocker arm 10 carries a tappet plate 170, adapted to engage the arm 171 of a bell crank lever 172, which is fulcrumed between two collars on a vertical post 173, projecting up from the bed plate 1. The other end 175, of the bell crank lever 172, is in constant engagement with an arm 176, which is loosely mounted upon a shaft 177, projecting laterally from a bracket 178, which is bolted to the bed plate 1, of the machine.

An arm 176, carries at its free end a pawl 179, and is normally retained in the retracted position shown in the drawings, by means of a spiral spring 180. Directly adjacent to the left of arm 176, (Figs. I, XIX and XX) a ratchet wheel 181, is also mounted loosely upon the shaft, and is acted upon by the pawl 179, which also serves to pick a second ratchet 183, when permitted by the deep spaces 184, and 185, in the ratchet wheel 181 (Fig. XX). It will thus be seen that for every ten complete reciprocations of the machine, the ratchet wheel 183, will be pawled one tooth.

The smaller ratchet wheel 183, is cast integral with a sleeve 182, which is adapted to rotate about the shaft 177, and is retained in position thereon by means of a collar 186. A sprocket wheel 187, is also cast integral with the sleeve 182 (see Fig. XIX), and supports a measuring chain 189, which in the present instance consists of sixty-five links, but this number may be varied according to the length of stocking that is to be knit.

The teeth of the sprocket 187, are related to the teeth of the ratchet 183, respectively in the ratio of one to two, and it is, therefore, obvious that the chain is moved the distance of a link for every two picks of the ratchet wheel 183, or every complete revolution of the ratchet wheel 181.

The measuring chain 189 comprises special knitted links 190, 191, 192, 193, and 194, which respectively engage a series of pins 195, 196, 197 198 and 199 mounted upon the periphery of the drum 36, already mentioned, and thereby control the timing of the formation of the toe, heel and fashioning of the leg of the stocking in a manner which will be described in connection with the operation of the machine.

VI. The fashioning mechanism.—Extending laterally from the hub of the eccentric 7, is a pin 200, which is connected through a universal joint to a link 201, which is similarly connected to an arm 202, secured to a rock shaft 203, which extends from the center of the machine to the left hand end, as viewed in Figs. I, II and III, and is journaled in brackets 205, depending from the under side of the bed plate 1.

An arm 206, secured to the shaft 205, near its left hand end, carries a pivoted block 207, which engages a slot 208, in a depending arm of a link 210, whose extremities are pivoted at 211, and 212, to oscillating arms 213, and 214, which are loosely mounted upon the worm shafts 215, and 216, respectively. The said worm shafts are journaled in brackets 217, and 218, respectively, bolted to the top of the bed plate 1, (see Fig. II).

The mechanisms for rotating the worm shaft are two in number. These mechanisms are identical but highly complicated, and had, therefore, better be described separately. Beginning with the one on the right side, which operates the side of the machine illustrated in Fig. II, the oscillating arm 213, already described plays (see Fig. XVII) between a pair of lugs 219, on the back of a drum 220, which is also loosely mounted upon the worm shaft 215, see Figs. XVI, XVII and XVIII. The back of the drum 220, is extended so as to form a flange 221, which serves at that end to retain a series of ratchet rings 222, 223, 224, 225 and 226, which are adapted to revolve upon the face of drum 220. At the other end of drum 220, the rings 222, to 226 inclusive, are retained by the overlapping portion 227, of a bearing plate 228, screwed to the edge of said drum, and a second plate 229, which extends from the worm shaft 215, upon which it is loosely mounted, extends slightly beyond its periphery. Plate 229, is also screwed at 230, to the edge of the drum 220. (See Fig. IV.)

The first three of the series of ratchet rings, namely 222, 223 and 224, are adapted for rotation in a counter-clockwise direction by means of a pawl 231, and the remaining two in a clockwise direction, by a similar pawl 232. Pawls 231, and 232, are loosely mounted upon a stud 233, which is secured to the free end of oscillating arm 213, and extends to a similar arm 234, adjacent to the opposite side of drum 220, and which is also loosely mounted upon the arm shaft 215. The ratchet rings 222, 223, 224, 225 and 226, are respectively provided with blank spaces 235, in which the pawls 231, and 232, play idly during the inactivity of the rotating mechanism. Ratchet rings 222, to 226, are also respectively provided with high teeth 236, whose purpose will be later described.

As shown in Figs. XVI to XVIII, inclusive, the drum is hollow for the reception of oppositely disposed ratchet pinions 239, and 240, which respectively pawled under the control of the two groups of ratchet rings 222, 223, 224, 225, and 226, respectively.

By means of ratchet pinion 239, the worm shaft 215, is rotated in a clockwise direction, and in the opposite direction by the pinion 240. The pawls 250, 251, 252, 253 and 254, effecting the motion of ratchets 239, and 240, correspond respectively in number to the ratchet rings 222, 223, 224, 225 and 226, and are likewise grouped.

Pawls 250 to 254, inclusive, are pivoted upon a stud 255, extending from the back of drum 220, and terminating in the bearing plate 228, already described, and best seen in Fig. XVI. The said pawls are provided with fingers 256, on the opposite sides of their pivotal point. These fingers are adapted to be engaged by notches 257, in the inner peripheries of the cam rings 222 to 226, inclusive, respectively. When these fingers are permitted to drop into the said notches under the influence of springs 258, on the pawls 250, to 254, inclusive, the opposite ends of the said pawls move into the path of the ratchet pinions 239, and 240, and thereby engage them in a manner and in the order, as will be explained in connection with the operation of the machine.

Adjustable stops 260 and 261, are secured to the outer edge of drum 220, and respectively coöperate with abutting buffers 262 and 263, respectively, which are bolted to the top of bed plate 1. The extent of effectiveness of rings 221, and 222, is limited by a guard 265, which extends over a portion of the periphery of ratchet 239. By this means, pawls 251, and 252, are permitted to pick said ratchet only one tooth at a time, while the unguarded pawl 250, picks two teeth at a time. The guard 270, which affects pawl 254, of the other group, also limits the picking of the ratchet 240, to one tooth at a time, while the other or unguarded pawl 253, is permitted to pick two teeth at a time.

The just described features are made use of during the formation of the heel pockets, and correspond in function to the devices controlling the action of the pickers in ordinary knitting machines.

Refeiring to Fig. VI, a series of projections 275, 276, 277, 278, 279, 280, 281 and 282 also are mounted upon the controlling drum 35, and are adapted to engage a cam finger 283, pivotally mounted on a bracket 285, at the right hand end of the machine (Fig. I). See also Figs. VI and VIII. An arm 286, extending substantially at right angles from the said finger 283, is connected by means of a link 287, which passes through an aperture 288, in plate 1, to a plate 289, mounted loosely upon countershaft 156, already referred to. The plate 289, is held in place between a collar 290, and a ratchet wheel 291, which are both fixed upon the shaft 156, and carries at the end of its arm 292, a pawl 293, which is adapted to engage the said ratchet 291, and imparts thereby its motion to the said shaft 156. A spiral spring 295, serves to return the plate 289, to its active position after each pick of the pawl 293.

Near the left hand end of the machine (Figs. I, III and IV) a trip wheel 296, is secured to the shaft 156, and is adapted to engage a cam lug 297, on a trigger plate 298, which is pivoted on a bracket 299, depending from the under side of bed plate 1. Between the rocker arm 206 and collar 300, the shaft 203, loosely supports a lever 301, whose lower end 302, is provided with a pin 303, adapted to engage notches 304, and 305, in the free end of trigger plate 298. The said trigger plate is maintained in contact with pin 303, by means of a tension spring 306, which is secured to a lug 307, extending from lever 301. When the trigger plate 298, is trapped by one of the projections on the wheel 296, a spiral spring 310, acting upon the upper portion 311, of lever 301, causes the pin 303, in its lower end 302, to drop from the position shown in the drawings, into the notch 305. This allows the upper end of the lever 301, to move far enough to the left (Fig. IV) to move a pin 312, carried on the back thereof into the path of the oscillating arm 206.

During the engagement of the oscillating arm 206, and co-acting pin 312, the lower end of the lever 301, is moved to the left, so that the action of the spring 306, becomes effective in restoring the engagement between the pin 303, on said lever, and the notch 304, in the end of trigger plate 298, as shown in Fig. IV. The upper end 311, of lever 301, is slotted at 313, and engages a pin 314, which projects laterally from a link 315, whose ends are pivotally connected to pawl arms 316, and 317, which are loosely mounted upon respective shafts 318, and 319, on opposite sides of the machine.

The parts carried by the shafts 318, and 319, are identical on each side of the machine: therefore to avoid duplication in description, one side will be described alone, as before, it being understood that the corresponding parts on the opposite sides, are substantially similar in operation.

The shaft 318, is journaled in brackets 320, and 321, which extend up from the bed plate 1, and are secured thereto. The arm 316, already described, is loosely mounted upon the left hand end of the shaft 318 (Figs. I and II) between the bearing on the bracket 320, and a ratchet wheel 322, which is secured to said shaft. The arm 316, pivotally supports at its upper end a spring pressed pawl 323, which is adapted to engage ratchet wheel 322, to rotate the shaft 318. A spring 325, acts upon the teeth of the ratchet 322, and prevents accidental slippage.

Mounted upon the shaft 318, are a pair of wing spiders, comprehensively indicated at 326, and 327, respectively. Spider 326, comprises a pair of hubs 328, and 329, which are slidably mounted upon the shaft by means of keys that engage the slot 330, therein. These hubs are provided with radial flaps, to which are secured the depressing wings or fashioning plates 331, 332, and 333, which operate upon the pivoted needle jacks 55, as will be more definitely described later. The spider 327, also comprises two hubs 335, and 336, which respectively carry radial flaps, to which are secured fashioning plates 337, 338, 339, 340 and 341, which also operate upon the needle jacks during the several fashioning steps necessary in the formation of a stocking. The hubs 328, and 336, of the spiders 326 and 327, are respectively rotatably secured in the upper ends of arms 345, and 346, which are provided at their lower ends with bosses 347, and 348, within which the oppositely disposed worms 349, and 350, on the shaft 215, operate.

Arms 345, and 346, are adapted to be moved backward and forward by means of the worms 349, and 350, relatively in contrary directions, to vary the number of needles in fashioning, as will be described later. In order to more rigidly support the arms 345, and 346, during their motion, they are provided with set screws 351, and 352, which are adjustably supported in plates 353, and 354, projecting from them, and roll upon balls 355, which follow a groove 356, formed in the top of bed plate 1, as best seen in Fig. V. A bracket 360, bolted to the bottom of the bed plate 1, is provided with a cross bar 361, which is located directly under the drum 220, already described. Slidably mounted upon the cross bar 361, are a series of tripping blocks 362, 363, 364, 365 and 366, which as best seen in Fig. XVII, are provided with pins 367, forced against the said cross bar by means of springs 368, and which are arranged to be retained in their uppermost positions by the engagement of the ends of said pin 367, with the detent recesses 369, in the side of the bar 361. By this means, the said blocks remain in whatever position placed. The blocks 362, 363, 364, 365 and 366 are provided at their bottoms with cam ribs 370, which are adapted to be engaged by a series of corresponding cams 371, 372, 373, 374 and 375 on the shaft 156.

When the shaft 156, is rotated to bring the cam 371, into engagement with the trip block 362, the latter is raised into the path of the high tooth 236, of the ratchet ring 222. In the oscillation of the drum 220, in a clockwise direction, the upper edge, of the block engages the high tooth 236, in the ratchet ring 222, so that the blank space 235, of the said ring is slightly advanced to permit the picking of the [illegible] cam ring by the pawl 223. The other trip blocks act in the same manner upon the remainder of the ratchet rings, and further description will, therefore, be unnecessary. In order to operate the similar trip blocks on the other side of the machine, shaft 156, is provided with a [illegible] pinion 380, which meshes with a similar pinion 382, on a shaft 383, which is journaled in brackets 384, depending from the bed plate 1. The other end of the shaft 383, carries the bevel pinion 385, which imparts motion to the co-acting pinion 386, upon the shaft 387, on the other side of the machine.

To the bottom edge of the needle bed 17 (Figs. XII and V) is pivoted a plate 390, having a raised portion 391, which during the knitting of the heel of the stocking retains a number of the jacks 55, in their raised position, and their corresponding needles, which are used only in the fashioning of the leg of the stocking, are thereby rendered idle. The shifting of the shaft 76, during the stage of the knitting already mentioned, causes the cam 392, carried on the end of the tie rod 151, to engage the notch 393, in the bottom edge of plate 390, to raise the said plate to perform the function just stated.

The parts just described are, of course, duplicated upon the other side of the machine, the corresponding elements operating in substantially the same manner.

VII. The stitch cam carriage.—As best shown in Fig. XI, the carriage 399, comprises a pair of cam bars 400, and 401, which are connected at their ends by means of yokes 402, and 403, to which they are secured. The cam bar carriage 399, is adapted to be reciprocated by means of the rocker arm 10, the top end of which is connected by means of a link 404, with the yoke 403, at the right hand end of the machine, as seen in Fig. I. The cam bars 400, and 401, are guided in their motion in guides 405, 406 and 407 and 408, which are respectively screwed to the end standards 15, and 16, which support the needle beds.

VIII. The stitch cams.—Each of the cam bars 400, and 401, is provided with a stitch cam, and as these cams are identical on each side of the machine, the description will be confined to one of them,—preferably that shown on the side of the machine illustrated in Fig. I. Referring now particularly to Figs. XIII to XV inclusive, the bar 400 is provided at its middle point with a stitch cam 410, which is capable of vertical movement, being guided between a pair of supplemental cams 411, and 412, as shown in Fig. XIV. The upper needle hubs are normally maintained at the level of the top of a guard cam 413, which is secured to the

bar directly beneath the stitch cam. For the remainder of the lengths on each side of the stitch cam, the bar 400, is provided with a comparatively wide groove 415. In the process of knitting according to my invention, the needles knit only when their upper butts 51, are raised by means of their respective jacks 55, into the path of the stitch cam 410, whereupon they are drawn down, thereby to form stitches, and thereafter so remain until again acted upon by the said jacks. This "lifting" of the needles is accomplished at the end of the strokes of the machine, when the wide grooves 415, of the cam bar 400, on each side of the stitch cam, are shifted to the region of the action of the needles.

The stitch cam 410, is secured by means of screws 416, to a sliding plate 417, on the outside of the bar, and is spaced therefrom by means of sleeves 418, which surround the said screw 416, and play within slots 419, in the back of the bar 400. The plate 417, is moved between guides 420, and 421, on the outside of the bar, and is provided with a lateral projection 422, which supports a pair of set screws 423.

Pivoted at 425, to the outside of the bar, is a lever 426, whose outer end plays within the guide bar 421, and is normally held against a stop 427, by means of a tension spring 428. The slide plate 417, is subject to the action of a spring 430, secured to an arm 431, depending from the lever 426, and the screws 423, are thereby constantly held in contact with a rotary cam 432, which is secured to the back of a ratchet pinion 433, loosely mounted upon a stud 434, screwed into the lever 426.

Rotation of the ratchet 433, will cause the raising and lowering of the stitch cam, depending upon the action of the high and low portions 435, and 436, respectively, upon the screws 423, carried by the projection 422, of the slide plate 417. A spring 437, mounted upon the end of the lever 426, acts as a brake for the ratchet pinion 433, and thereby prevents any accidental displacement thereof. The raising of the cam 410, places this cam in the proper position for starting the first stitches at the toe on the new stocking as will be explained later. At its free end, the arm 431, depending from the lever 426, carries a roller 438, which during the formation of the heel rides upon the raised or idle jacks 55, so as to elevate the lever 426, and, therefore, the stitch cam 410, by reason of its connection therewith, prevents the stretching of the loops held upon the idle needles during that stage of the process of knitting.

IX. The sinkers and the sinker cam bar carriage.—The sinkers, of which there are two sets, one on each side of the machine to correspond to the division of the needles, are pivotally mounted upon rods 445, 446, which extend respectively within slots 447, 448, cut into the sinker bars 449, 450, which are secured to the needle beds 17, and 18. The sinkers here shown perform a double function, first that of holding the web by means of their nubs 451, and 452; and second, of guiding the web by means of their curved noses, as indicated at 453, 454. The sinkers are oscillated about their pivots by means of their tails 455, which are operated upon by the cam grooves 456, 457, in their respective cam bars 458, 459. See Figs. V, and XI.

The cam bars 458, 459, are coupled at their ends by means of connecting plates 460, and 461. It will be remembered that the cam bar 458, is guided in the sinker bar 449, which is secured to the movable needle bed 11. The sinker cam bar 458, is, therefore, not permanently secured to the connecting plates 460, 461, but is provided with slots, which are respectively engaged by blocks 462, and 463, screwed to the said plates 460, and 461.

Secured to the center of the sinker cam bar 458, is a bracket 465, which adjustably supports the thread feed 466, having a guide hole which may be supplied from any suitable bobbin, not shown in the drawings. (See Figs. I, V, X and XIII). The said sinker cam bars 458, 459, also carry at their centers, vertically projecting plates 467, and 468, which are slotted to receive pins 469, 470, projecting from slide blocks 471, 472, respectively. These blocks slide and are guided upon rods 473, and 474, which are respectively secured to the sinker bars 458, and 459. Screwed to the blocks 471, and 472, are latch openers 475, and 476, having cam nibs 477, 478, which in their motion protrude under the latches of the needles, and thereby open them in readiness to take the thread.

Coöperating respectively with the latch openers 475, and 476, are leveling bars 498 and 499. These bars extend longitudinally the full length of the needle bed and have a beveled edge, see Fig. V. The leveling bar 499 has a beveled edge in line with the needles 51, when they are raised and serves to bring all the needles absolutely in a direct line and the proper distance from the point of the latch opener. This avoids any possibility of the latch opener striking the needles and bending or breaking the same. The leveling bar 498, operates in a similar manner in connection with the needles on the other side of the machine. The leveling bar 499, is attached to the sinker bar 449, while the leveling bar 498, is attached to the sinker bar 450. By this arrangement the leveling bars will maintain the same relative position to the needles, regardless of the position of the needle bed plates. The sinker cam bar carriage 480, is adapted to move in synchronism with the stitch cam

carriage 399, except when the work is to be pressed off by means of a certain mechanism which will be described later. A certain amount of lost motion is, however, necessary between these two carriages to permit the thread feed to be at all times in the lead of the stitch cams, and this is accomplished by the parts about to be described.

Referring more particularly to Figs. X, and XI, the connecting yokes 402, and 403, of the stitch cam carriage 399, are provided respectively with bifurcated depending lugs, between which are pivoted dogs 481, and 482, as indicated at 483, and 484. Set screws 485, and 486, respectively, playing in slots in the tops of the yokes 402, and 403, limit the amount of motion of the dogs 481, and 482, respectively. When the stitch cam bar carriage 399, moves to the left, as shown by the arrow in the drawings, the notch 487, on the dog engages a block 488, on the connecting plate 461, of the sinker cam bar carriage, which is, therefore, moved until the cam incline 489, on the end of the dog 482, strikes the top of an adjustable lifting plate 490, which is mounted upon a bracket 491, projecting from the end standard 16, as best shown in Fig. X. As soon as the engagement between the dog 482, and the block 488, is broken, the sinker cam bar carriage 480, comes to rest, while the stitch cam bar carriage completes its stroke in that direction. In the return stroke of the stitch cam bar carriage, the notch 492, on the dog 481, engages a block 493, on the connecting plate 460, already mentioned, which causes the sinker cam bar carriage to be moved until the dog 481, is tripped by a lifting plate 495, which is secured to the bracket 496, on the standard 15. The sinker cam bar carriage 480, thereupon comes to rest, while the stitch cam bar carriage 399, completes its return motion in a manner precisely the same as that before described. A cursory examination of the drawings will show that by this means the thread feed 466, will be kept constantly in advance of the stitch cams, no matter what the direction of reciprocation.

In order to permit the pressing off of a finished stocking, the sinker cam bar carriage 480, and, therefore, the thread feed 466, carried thereby, is rendered idle for a double reciprocation of the machine, which corresponds to a course of knitting, by means of the parts about to be described. A rock shaft 500, extends longitudinally across the machine, and is journaled in standards 15, and 16, and carries at its right hand end a cam finger 501, which is adapted to be engaged by a cam 502, also mounted upon the periphery of the controlling drum 36, see Figs. I and VI. Mounted upon the shaft 500, between the standard 16, and the finger 501, is a tappet arm 503, which engages a spring-pressed slide rod 505, which is guided in a bracket 506, secured to the guide 407, for the stitch cam bar 400. The upper end of the slide rod 505, is adapted to engage a collar 510, on the right hand end of a rod 511, which extends between and is slidably mounted in bosses 512, and 513, cast integral with the connecting yokes 402, and 403, of the stitch cam bar carriage. The rod 511, at its left hand end is provided with a laterally projecting pin 515, which is adapted to engage a cam hook 516, on the top of the dog 481. The rod 511, is normally maintained in the position shown in the drawings, by means of a pin 517, extending from the left hand end of the sinker bar 449, as best shown in Fig. I, which engages a collar 518, on the left hand end of the rod 511.

When it is desired to "press off" the work from the machine, the engagement of the cam 502, on the drum 36, with the finger 501, causes the slide rod 505, to be moved into the path of the collar 510, on rod 511. This causes the pin 515, to be shifted under the cam hook 516, on the dog 481, thereby breaking the engagement between the stitch cam carriage and the sinker cam carriage, whereby the latter remains idle for a double reciprocation of the machine, which corresponds to a course of knitting. It will be remembered that the thread feed is carried by the sinker cam carriage, and that, therefore, no thread would be fed to the needles during this "pressing off" operation of the machine.

X. Mechanism for raising and lowering the stitch cams.—The drum 36, is provided upon its periphery with cams 525, and 526, which operate upon a finger 527, secured on a shaft 528, (see Fig. VI), which is journaled in the end standards 15, and 16, which support the needle beds. At the opposite ends of the machine (Fig. IV) a tappet finger 529, is secured upon the shaft 528, and engages a similar finger 530, on a second shaft 531, journaled in the end standards. The motion thus imparted to the shaft 528, by reason of these connections, is transmitted to the shaft 531. The said shaft 531, is on the side of the machine shown in Fig. I, and supports a tappet arm 532, which engages a rod 533, slidably mounted in a bracket 534, extending from the cam bar guide. The upper end of the rod 533, engages the tail of a dog 535 (Fig. I), which is spring pressed and pivoted at 536, to the said bracket. When the rod 533, is raised by the motion of the shaft 531, the free end of the dog is moved into the path of the ratchet pinion 438, thereby rotating the cam 432, attached thereto in a manner already described, and which ultimately results in the raising and lowering of the stitch cam. As shown in Fig. VI, the shaft

528, also supports a tappet finger 540, which engages a slide rod 541, mounted in a bracket 542, extending from the slide bracket 408, for the cam bar 401. The rod 541, also engages a dog 543, similar to the dog 535, already described, which performs a like function in the operation of the stitch cam on the opposite side of the machine.

XI. Operation of the machine.— In the operation of the machine, during the knitting of the last course at the top of the finished stocking, the pattern chain engages the change drum and turns it sufficiently so as to bring the pawl carried by the oscillating yoke into engagement with the ratchet teeth on the change drum. The change drum will then be rotated until another blank tooth comes under the operating pawl. The rotation of the change drum brings the cam 502, into engagement with the finger 501, which oscillates the rock shaft 500, and through the tappet arm 503, lifts the rod 505, into the path of the collar 510, on the rod 511. The rod 511, through the pin 515, lifts the locking dog 481, from engagement with the sinker cam carrier, so that on the next reciprocation of the stitch cam carriage, the sinker cam carriage remains idle, and also the thread carrier which is mounted thereon. This reciprocation of the stitch cam carriage depresses all the needles and presses off the finished stocking from the machine. At the end of this reciprocation, the oscillation of the rock shaft 528, will throw the dog 535, into the path of the ratchet wheel 433, controlling the cam 432, which shifts the stitch cam 410, up and down, putting the stitch cam in the proper position for starting the first row of stitches at the toe of the next stocking. The thread carrier and latch opener, however, are again picked up by the stitch cam carriage on the next double reciprocation as the continued rotation of the change drum causes the rock shaft 500, to return to its normal position. As the stitch cam carriage reciprocates, the latch openers lift the latches of the needles preparatory to beginning the next stocking.

The continued rotation of the change drum, causes one of the pins 88 or 89, to engage the finger 87, carried by the rock shaft 77; which lifts the needles at the rear of the machine as viewed in Fig. I, to a position slightly above the hooks of the needles on the opposite side of the machine, which are at this time normally raised. The thread carrier as it reciprocates, lays the thread into the hooks of the needles both at the front and the back of the machine, and, therefore, the stitches are hooked on to the needles used in knitting the foot of the stocking on both the needle beds. This forms a setting-up course to begin the automatically closed toe of a new stocking. On the movement of the carriage in the opposite direction, the needles at the rear of the machine drop to a position slightly below the needles in the front of the machine, and remain idle in this position during several reciprocations of the stitch cam carrier.

The continued movement of the change drum lifts the pawl from the ratchet wheel, which operates the cam wheels for raising and lowering the needle jacks, so that said cam wheels become idle. The pawl-lifting arm which is connected to the rock shaft 76, is coupled directly to the yoke 101, which rotates the change drum, and the vibrations of this yoke will raise and lower the needle jacks 55, at the front of the machine, and a plurality of courses will be knit upon these needles, and at the same time cam 410, will be brought down to its normal position. This same movement of the change drum will bring a space between the cam plates 34, and 35, in front of the finger 33, and allow the same to move toward the change drum, which in turn allows the spring to raise the needle bed at the front of the machine, to bring the knitting position of the needles closer to said idle needles holding the first course of stitches and this positioning of the needles occurs before the knitting of the courses forming the strengthening gore thus enables the stitches, throughout the entire toe to be made of equal length, and to form a toe wherein there in practically an invisible starting point. This same movement of the change drum also operates through the shaft 156, and its connected parts, to rotate the fashioning plates which control the needle jacks, so that only the needles which are used to knit the foot of the stocking are thrown into action, both at the front and the rear of the machine. In the present machine, I have arranged to knit six courses on the needles at the front of the machine as viewed in Fig. I, but this number of courses may be changed to any number desired to suit the work being knit. These six courses form what I term the strengthening gore for the toe of the stocking.

As soon as the parts are positioned for the knitting of the six courses above referred to, the change drum becomes idle, and remains so until the six courses are finished. The pattern chain will then again turn the change drum to throw the same into action, and a rotation of the same will release the pawl-lifting arm from the yoke, and set into action the ratchet wheel for rotating the cam wheels which lift the needle jacks. This same movement of the change drum will operate through the shaft 156, to again rotate the fashioning plates, so that all the

needles are rendered idle or thrown out of action, still, however, retaining their stitches, except the central needles on both beds, which are used in the forming of the end of the toe. This rotation of the shaft 156, will also throw into action the ratchet rings which control the worm shafts, and as the machine proceeds with the knitting, the worm shafts will be rotated, which will gradually separate the fashioning plates longitudinally, and throw into action two needles, first on one side and then the other of the mach. for each complete reciprocation thereof. The number of needles, however, which are thrown into action, may be varied, and, thereby the shape of the toe changed at will. By thus throwing into action two needles, first on one side and then the other, a gradual widening of the toe will be accomplished, and a tube will be knit in which the widening stitches are united with the outside stitches of the previously formed gore which is held by the idle needles.

After the finishing of the toe, the foot of the stocking is knit by the normal operation of the machine, the needle jacks first on one side and then the other being lifted by the cam wheel 82. When the heel of the stocking is reached, the pattern chain again turns the change drum, so that a pin on the change drum engages and rotates the shaft 156, which throws the lever 150, into action, and this lever in turn will shift the rock shafts which raise and lower the needle jacks, so that the rollers carried thereby are brought into engagement respectively with the cam wheels 84, and 86. These needle-lifting fingers are so constructed and arranged relative to each other, as to lift the needles twice on the front side of the machine, and then twice on the rear side of the machine. This same movement of the change drum will also turn the fashioning plates so as to render idle one-half of the needles at the same ends of both beds used in knitting the foot; while the other half of the needles are used for the formation of the heel. The raising of the needles twice first on one side and then on the other of the machine, causes the thread carrier to lay the thread into the needles on the front of the machine in a direction toward the idle needles, and then back again away from the idle needles, thus avoiding the connecting of the two sides at the central portions of the needles. The thread is then laid into the rear needles and back again. This same movement of the change drum will also throw into action another of the ratchet rings which control the worm shafts, and as the worm shaft is rotated, a certain number of needles are thrown out of action, and then again into action at the center of the beds, so as to properly form the heel. As above noted, the ratchet rings are so controlled that one needle is affected during the rotation of the worm gear in one direction and two needles during the rotation in the opposite direction. After the heel is completed, the pattern chain again turns the change drum into action, which puts the machine back into normal position, shifting the rock shafts which lift the needle jacks, so as to bring the operating rolls into engagement with the cam wheel 82.

In order to fashion the leg of the stocking, practically the same operation takes place as in fashioning the toe. The pattern chain rotates the change drum, the fashioning plates are likewise rotated so that all the needles which are knitting, are rendered idle, and the needles only which are to be used in the widening of the leg are raised, while a thread is laid into both the needles in the front and rear of the machine, and a plurality of courses preferably six, are knitted on the needles at the rear of the machine only; after which the machine is restored to normal position, and the knitting proceeds on the regular needles which were idle, and one after another the widening needles are thrown into action, thus joining the strengthening gore at its edges with the united widening stitches.

During the knitting of the remainder of the stocking, all of the needles are in action. The change drum again controls another ratchet ring which is thrown into action to rotate the worm shaft, so as to bring the fashioning plates back into normal position for the first operation in the stocking. The stocking is pressed off as above stated.

In Fig. XII. I have shown more or less diagrammatically a stocking in which is indicated between 548 and 549, the toe of the stocking; the strengthening gore for the toe extends from the point 550 to 548, on one side of the toe and 551, to 549, on the other side of the toe. The strengthening gore in the leg of the stocking extends from the point 553, to the point 554. This strengthening gore, inasmuch as its outside stitches are united by the widening stitches, will produce a slightly ribbed effect on the outer face of the stocking at the widening portions thereof.

Having thus described my invention, I claim:—

1. In a knitting machine, the combination of straight rows of needles, mechanism for simultaneously knitting a plurality of courses of fabric for the end of the toe of a stocking and for a strengthening gore on sufficient of the needles for forming the foot of the stocking, mechanism for subsequently rendering idle all of said needles having the

knitted courses thereon, except the needles for beginning the toe, and mechanism for operating said needles having the knitted courses thereon to knit successive increasing courses and joining said courses to the knitted gore for forming the toe of the stocking.

2. In a knitting machine, the combination of two needle beds, straight rows of needles in each bed, mechanism for knitting a plurality of courses of fabric for the end of the toe of a stocking and for a strengthening gore on the needles on one bed, mechanism for subsequently rendering idle all of the needles having the knitted fabric thereon on both said needle beds, except the needles for beginning the toe, and mechanism for subsequently knitting on both needle beds and widening the remainder of the toe of the stocking and joining said widening stitches to the strengthening gore.

3. In a knitting machine, the combination of two needle beds lying in planes intersecting each other, straight rows of needles in each bed mechanism for beginning a course of fabric on both needle beds and knitting a plurality of courses of fabric on one needle bed only for the end of the toe of a stocking and for a strengthening gore on sufficient of the needles to form the foot of the stocking, mechanism for rendering all of said needles in both beds idle, except the needles for beginning the toe, and mechanism for operating all of the needles on both beds having knitted courses thereon for knitting the toe and widening the same and joining the widening stitches to said strengthening gore.

4. In a knitting machine, the combination with inclined needle beds, of rows of needles therein, mechanism for raising the needles in one bed, mechanism for raising the needles in the other bed, so that a thread may be laid into the hooks of all the raised needles and mechanism for using the needles on both beds for knitting the toe of a stocking.

5. In a knitting machine, the combination with inclined needle beds, of rows of needles therein, mechanism for raising the needles in one bed, mechanism for raising the needles in the other bed, so that a thread may be laid into the hooks of all the raised needles, means for rendering the needles on one bed idle and for knitting a plurality of courses on the other bed and mechanism for using the needles on both beds for knitting the toe of a stocking.

6. In a knitting machine, the combination with inclined needle beds, of rows of needles therein, mechanism for raising the needles in one bed, mechanism for raising the needles in the other bed, so that a thread may be laid into the hooks of all the raised needles, means for rendering the needles on one bed idle, and for knitting a plurality of courses on the other bed, and means for raising the bed on which the courses are knitted, so as to bring the knitting position of said needles close to the idle needles holding the first made stitches.

7. In a knitting machine, the combination with inclined needle beds, of rows of needles therein, mechanism for raising the needles in one bed, mechanism for raising the needles in the other bed, so that a thread may be laid into the hooks of all the raised needles, means for rendering the needles on one bed idle, and for knitting a plurality of courses on the other bed, means for raising the bed on which the courses are knitted, so as to bring the knitting position of said needles close to the idle needles holding the first made stitches, and means for subsequently knitting a toe of a stocking and uniting the outside stitches of the previously knitted portion with the united widening stitching of the toe.

8. The combination of inclined needle beds, rows of needles arranged therein, mechanism for laying a thread into the needles on both beds used in forming the foot of a stocking, mechanism for rendering idle the needles in one bed and for causing the needles in the other beds to knit a plurality of courses, mechanism for subsequently rendering idle all the needles carrying stitches, except the needles which form the narrow portion of the toe, and mechanism to throw in at periods one needle on the side of each bed for widening the toe.

9. In a knitting machine, the combination of rows of straight needles, means for causing said needles to knit a tube forming the leg of a stocking, and mechanism for fashioning the leg including means for knitting a strengthening gore and for subsequently uniting the outside stitches of the strengthening gore with the united widening stitches of the leg.

10. In a knitting machine, the combination of straight rows of needles, mechanism for causing said needles to knit a tube forming the leg of a stocking, mechanism for rendering said needles idle, and for raising all the needles used to widen the leg, whereby a thread may be laid into the hooks of the widening needles and a plurality of courses knitted on the widening needles on one bed, mechanism for subsequently rendering all the widening needles idle and for throwing into action the remainder of the knitting needles, and mechanism for throwing into action at periods certain of the widening needles.

11. A knitting machine including in combination, a straight row of needles, mechanism for raising simultaneously all the needles in said row, a stitch cam for depressing said needles, a latch opener, and means for raising the stitch cams whereby the needles are not depressed sufficiently to form

stitches, so that said latch openers may raise the latches preparatory to the commencement of the toe of the stocking.

12. The combination of a straight row of needles, of means for simultaneously raising all of said needles, a stitch cam for depressing said needles, a stitch cam carriage, means for reciprocating said carriage, a sinker carriage, a thread carrier mounted on said sinker carriage, dogs carried by the opposite ends of the stitch cam carriage, and adapted to engage the sinker carriage, and means for releasing the dogs, whereby the throw of the stitch cam carriage exceeds that of the sinker carriage.

13. A knitting machine including in combination, a straight needle bed, needles carried thereby, individual jacks for each needle for lifting the same, a stitch cam for depressing successively said needles, and means for reciprocating said stitch cams and means for rendering the jacks ineffective to lift the needles.

14. In a knitting machine, the combination of a straight needle bed, needles carried thereby, individual jacks for each needle for raising the same, a stitch cam for depressing the needles, and means whereby the needle-operating jacks may be moved out of the path of the needles.

15. In a knitting machine, the combination of a straight needle bed, needles carried thereby having upper and lower butts, individual jacks for each needle, adapted to engage the lower butt, raise the needle, a stitch cam, coöperating with the upper butts for depressing the needles and means for reciprocating the jacks.

16. In a knitting machine, the combination of a straight needle bed, needles carried thereby having upper and lower butts, individual jacks for each needle, adapted to engage the lower butt and raise the needle, a stitch cam coöperating with the upper butts for depressing the needles, means for controlling the needle-raising jacks, whereby said jacks may be rendered ineffective and means for reciprocating the jacks.

17. In a knitting machine, the combination of two straight inclined needle beds, needles carried thereby, jacks for raising the needles, a stitch cam for depressing the needles, a cam wheel for raising the jacks first in one needle bed and then in the other needle bed and means for controlling the needle-raising jacks, whereby the jacks may be rendered ineffective.

18. In a knitting machine, the combination of two straight inclined needle beds, needles carried thereby, jacks for raising the needles, a stitch cam for depressing the needles, a cam wheel for raising the jacks first in one needle bed and then in the other needle bed, means for rendering said cam wheel idle and for raising the jacks in one needle bed only and means for controlling the needle-raising jacks, whereby the jacks may be rendered ineffective.

19. In a knitting machine, the combination of two straight inclined needle beds, needles carried thereby, jacks for raising said needles, stitch cams for depressing said needles, a cam wheel adapted to raise the jacks in one needle bed, an independent cam wheel for raising the jacks in the other needle bed, said cam wheels having double cam projections, whereby the needles are raised twice, first in one bed and subsequently twice in the other bed.

20. In a knitting machine, the combination of two straight inclined needle beds, needles carried thereby, jacks for raising the needles, cams for depressing the needles, a rock shaft for operating each set of jacks, a plurality of cam wheels for operating said rock shaft, and means for shifting said rock rock shafts, means for shifting said rock shafts are brought into operative engagement with various cam wheels, whereby the time of lifting the jacks may be varied.

21. In a knitting machine, the combination of two straight inclined needle beds, needles carried thereby, jacks for raising the needles, cams for depressing the needles, a rock shaft for operating each set of jacks, a plurality of cam wheels for operating said rock shafts, means for shifting said rock shafts longitudinally, whereby said rock shafts are brought into operative engagement with various cam wheels, whereby the time of lifting the jacks may be varied, and a change drum for controlling the longitudinal shifting of the rock shafts.

22. A knitting machine including in combination, two straight inclined needle beds, needles carried thereby, jacks for raising said needles, stitch cams for depressing said needles, a rock shaft operating to raise each set of jacks, cam wheels for operating said rock shaft, a change drum, means operated by said change drum for rendering said cam wheels idle, means operated by said change drum for lifting one of said needle beds to raise the hooks of the needles into threading position, and means for raising and lowering the jacks of the other needle bed, whereby a thread may be laid into the hooks of the needles on both beds, and the needles on one bed only subsequently operated to knit a plurality of courses.

23. In a knitting machine, the combination of two straight inclined needle beds, needles carried thereby, jacks for raising said needles, stitch cams for depressing said needles, means for controlling the jacks, whereby said jacks may be rendered effective or ineffective for raising the needles, means for raising said jacks, including cam wheels, means for controlling said cam wheels including a change drum, a pawl for

operating said change drum, means for causing said change drum to remain idle, and a pattern chain for throwing into action said change drum.

24. A knitting machine including in combination, two straight needle beds, needles carried thereby, individual jacks for raising said needles, means for raising said jacks, means for rendering said jacks ineffective, including fashioning plates adapted to engage said jacks and to raise the same out of contact with the needles.

25. A knitting machine including in combination, two straight needle beds, needles carried thereby, individual jacks for raising said needles, means for raising said jacks, means for rendering said jacks ineffective, including a rotating shaft, a plurality of fashioning plates carried thereby and adapted to be successively brought into engagement with said jacks for lifting the same out of engagement with said needles.

26. A knitting machine including in combination, two straight needle beds, needles carried thereby, individual jacks for raising said needles, means for raising said jacks, means for rendering said jacks ineffective, including a plurality of fashioning plates arranged in longitudinal alinement, and means for moving said plates laterally across the jacks for throwing into or out of effective action a certain number of jacks.

27. A knitting machine including in combination, two straight needle beds, needles carried thereby, individual jacks for raising said needles, means for raising said jacks, means for rendering said jacks ineffective, including a rotatable shaft, a plurality of alined fashioning plates carried by said shaft, means for rotating said shaft to bring said fashioning plates into engagement with the jacks, and means for separating the alined fashioning plates.

28. A knitting machine including in combination, two straight needle beds, needles carried thereby, individual jacks for raising said needles, means for raising said jacks, means for rendering said jacks ineffective, including a rotatable shaft, a plurality of alined fashioning plates carried by said shaft, means for rotating said shaft to bring said fashioning plates into engagement with the jacks, means for separating the alined fashioning plates, said means including a shaft having oppositely wound worms, and pattern-controlled mechanism for rotating said worm shaft.

29. In a knitting machine, the combination of a needle bed, needles carried thereby, jacks for raising said needles, means for controlling said jacks, whereby the same are rendered ineffective including fashioning plates, means for moving said fashioning plates longitudinally including a worm shaft, independent ratchet rings and connecting devices for operating said worm shaft, means for rendering said ratchet rings idle, and means for throwing into action the proper ring for controlling the jacks for the different parts of the stocking.

30. In a knitting machine, the combination of a needle bed, needles carried thereby, jacks for raising said needles, means for controlling said jacks, whereby the same are rendered ineffective including fashioning plates, means for moving said fashioning plates longitudinally including a worm shaft, independent ratchet rings and connecting devices for operating said worm shaft, means for rendering said ratchet rings idle, means for throwing into action the proper ring for controlling the jacks for the different parts of the stocking, and a ratchet ring for returning said worm shaft to normal position.

31. A knitting machine including in combination, a straight needle bed, needles carried thereby, jacks for raising the needles, means for controlling said jacks, including fashioning plates, a worm shaft for moving said fashioning plates longitudinally, a ratchet ring and connecting devices for moving said worm shaft in one direction, and a ratchet ring and connecting devices for moving the worm shaft in the opposite direction, said ratchet rings operating during the formation of the heel of the stocking, and means for pawling one ratchet ring one tooth at a time, and the other ratchet ring two teeth at a time.

In testimony whereof, I have hereunto signed my name at Easton, Pennsylvania this thirty first day of October 1910.

WILLIAM EVAN CHIPMAN.

Witnesses:

ERNEST ARTHUR PIGEON,

HUGH JAMES FLEMING,

JOHN BRUNNER.

A. GEE.

ATTACHMENT TO KNITTING MACHINES FOR ORNAMENTING HOSIERY.

APPLICATION FILED MAR. 23, 1911.

1,014,753. Patented Jan. 16, 1912.

FIG. 1.

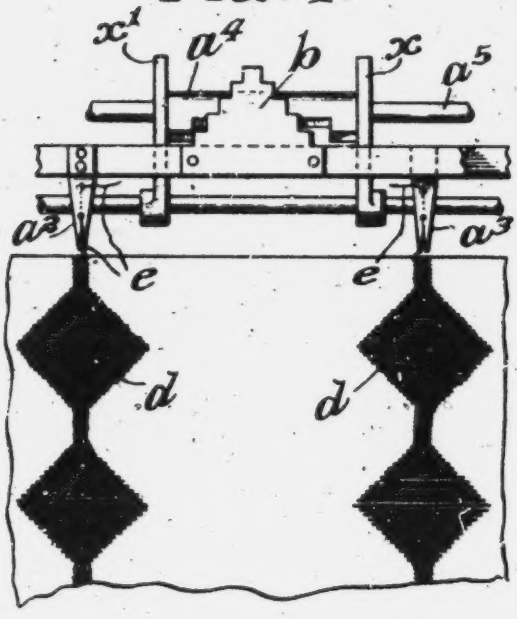

FIG. 2.

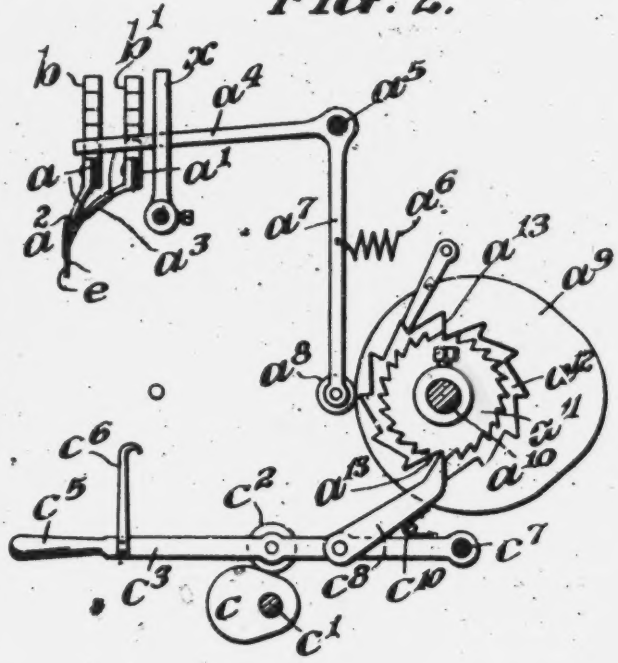

FIG. 3.

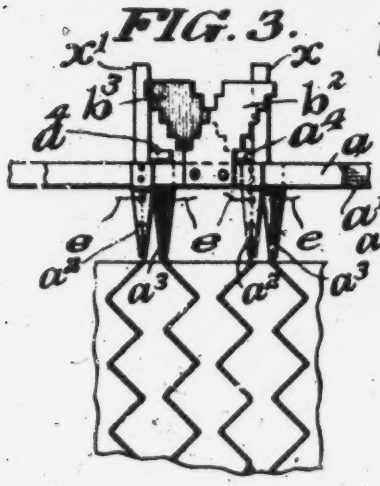

FIG. 4.

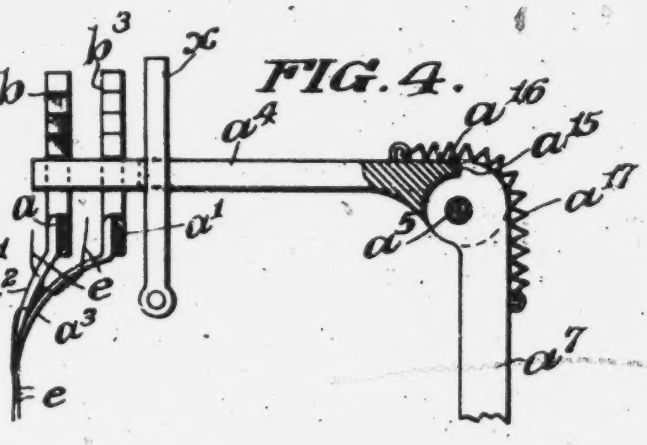

INVENTOR

Albert Gee,

WITNESSES

Thomas M. Smith

Elisha A. Shoddrake

BY J. Walter Douglas.

ATTORNEY

UNITED STATES PATENT OFFICE.

ALBERT GEE, OF PHILADELPHIA, PENNSYLVANIA.

ATTACHMENT TO KNITTING-MACHINES FOR ORNAMENTING HOSIERY.

1,014,753. Specification of Letters Patent. Patented Jan. 16, 1912.

Application filed March 23, 1911. Serial No. 616,417.

To all whom it may concern:

Be it known that I, ALBERT GEE, a citizen of the United States, residing at the city of Philadelphia, in the county of Philadelphia and State of Pennsylvania, have invented certain new and useful Improvements in Attachments to Knitting-Machines for Ornamenting Hosiery, of which the following is a specification.

My invention has relation to an attachment adapted for employment with a full fashioning flat knitting machine to variably ornament hosiery during production thereof; and in such connection it relates to the particular constructive arrangement of such an attachment to the knitting machine for the defined purpose.

The nature and scope of my present invention will be more fully understood from the following description taken in connection with the accompanying drawings forming part hereof, in which—

Figure 1, is a front elevational view of an attachment to a flat knitting machine to ornament hosiery during production, embodying main features of my said invention. Fig. 2, is a vertical sectional view of said attachment. Fig. 3, is a front elevational view of a modified arrangement of said attachment to obtain different ornamental effects in the hosiery, during production; and Fig. 4, is an enlarged sectional elevation of actuating parts of the said attachment, as shown in Fig. 3.

Referring to the drawings, a and a^1, are the reciprocating bars of a flat knitting machine provided with thread-carriers a^2 and a^3. On each of the bars a and a^1, is secured the pattern forming step-like devices b and b^1. These devices are preferably arranged in pyramidal form and so as to regulate movements of the bars a and a^1, as well as the thread carriers a^2 and a^3.

a^4, is a bifurcated bar held in guides x and x^1, of the machine. The bar a^4, as shown, is mounted on a shaft a^5, of the machine and is also provided with a depending extension a^7, held under tension by means of a spring a^6. This extension also carries a terminal roll a^8, operated by a cam a^9, with which it is held in engagement by means of a spring a^6. The cam a^9, is secured to a shaft a^{10}, of the machine. On this shaft a^{10}, is secured a ratchet-wheel a^{11}, and loosely carried on the same shaft adjacent to the ratchet-wheel a^{11}, is a second ratchet-wheel a^{12}. As shown, the teeth of these ratchet-wheels a^{11} and a^{12}, preferably differ in number with respect to each other, as clearly shown in Fig. 2, although they could be arranged each with a like number of teeth and equally good results be obtained. The ratchet-wheel a^{12}, loosely mounted on the shaft a^{10}, has a lesser number of teeth than the ratchet-wheel a^{11}, fixed to the said shaft. In the ratchet-wheel a^{12}, one or more of the teeth for example a^{13}, is deeper than the rest of the teeth of this ratchet-wheel.

c, is a cam mounted on a shaft c^1, of the machine, which, actuates a roll c^2, journaled to a bar c^3, carrying a handle c^5, and hook c^6, for lifting the same out of the way, when required, that is, when simply plain knitting, by the machine is to be done. The bar c^3, is mounted at its forward end on a shaft c^7, of the machine and between its forward pivotal connection and the roll c^2, carried thereby, is arranged a pawl c^8, in pivotal connection therewith and normally arranged to engage the ratchet-wheel a^{12}, and held in engagement therewith, by means of a spring c^{10}, until a deep tooth of said ratchet-wheel is brought into position with the same, when the said pawl engages with teeth of both ratchet-wheels of the shaft a^{10}, to revolve the latter and the cam a^9, to operate the roll a^8, of the bar a^4, and thereby cause the bifurcated portion of said bar to step up, notch by notch or down, notch by notch of the pyramidal step-devices b and b^1. These devices so arranged one in advance of the other as shown in Fig. 2, control the successive throw movements of the bars a and a^1, and also the carriers a^2 and a^3, of the ornamenting thread or yarn in producing the particular ornamental design in the hosiery and during ordinary knitting of the stocking blank, as indicated for example, at d and d^1, in Fig. 1. In the operation of the thread-carriers a^2 and a^3, the thread or yarn e, drawn therethrough and controlled by the devices b and b^1, effect the said results through the bifurcated portion of the bar a^4, being caused to successively step up notch by notch and thus to increase step by step the throw of the bars a and a^1, to gradually increase or widen the design in the stocking, while ordinary knitting of the same is going on. A reverse movement of the bifurcated bar a^4, produces a gradual narrowing of the design, in the stocking and during knitting thereof. This

is effected by the step by step movement downward of the said bar along the steps of the pyramidal devices b and b^1, shortening the throw of the bars a and a^1, as descending, as will be apparent from Fig. 1.

From the foregoing it will be understood that the action of the bars a and a^1, in connection with the devices b and b^1, induced by the operating mechanism of the machine described, will cause during knitting on a flat machine ornamental designs or configurations corresponding in shape or form to those illustrated in plan Fig. 1. Further, that in order to vary the designs, as shown, it is only necessary to change the form of the devices b and b^1, and this can be readily accomplished by simply removing the type of said devices b and b^1, of Fig. 1, from the bars a and a^1, and replacing by others having different pyramidal pattern forming conditions.

In Figs. 3 and 4, are shown, a modified arrangement of the pyramidal pattern forming devices b^2 and b^3. In this instance they are arranged in reverse relationship to each other from the respective bars a and a^1, and are engaged by the bifurcated portion of the bar a^4, and moved step-by-step upward to cause the bars a and a^1, to be moved in opposite directions and at the same time limited as to their oscillations to thus correspondingly operate the thread-carriers a^2 and a^3, manipulating the ornamenting thread or yarns back and forth rapidly to variably produce a zig-zag ornamental design, such as is shown in plan, in Fig. 3, during knitting of the hosiery on a full fashioning flat knitting machine. In Fig. 4, the bifurcated portion of the bar a^4, is pivoted to the extension a^7, and is provided with a shoulder a^{15}, which bears against an offset a^{16}, held normally in engagement therewith, by a spring a^{17}, as shown in Fig. 4. The bifurcated bar a^4, is held in contact with a set of steps of the devices b^2 and b^3, by means of the spring a^{17}. A cam a^9 causes the bar a^7, to rotate on the pivot a^8, to free the shoulder a^{15}, from the said offset a^{16}, of the bar a^4, and at the same time to bring the spring a^{17}, under such tension as that when a set of steps of the said devices b^2 and b^3, are alined under the influence of the spring a^{17}, the bifurcated portion of the bar a^4, is lifted into engagement with the set of steps of the devices b^2 and b^3, to thereby cause the bars a and a^1, to be spaced farther apart, during their oscillations and so on, in order to continue the production of zig-zag designs of the character for example, as shown in Fig. 3, during ordinary knitting of the stocking blank on the flat or straight knitting machine, in which the said devices are particularly adapted for use.

Having thus described the nature and objects of my invention, what I claim as new and desire to secure by Letters Patent is:—

1. In a knitting machine, two horizontal reciprocating bars, thread carriers supported by said bars, two step-like pattern forming devices secured to said bars and arranged one in advance of the other, a pivoted bifurcated bar provided with roller-means, said bar arranged to step up or down, notch by notch, of said pattern forming devices and a cam controlled pawl and ratchet mechanism to actuate said bifurcated bar and thereby to permit of reciprocations of said horizontal bars, substantially as and for the purposes described.

2. In a knitting machine, two horizontal reciprocating bars, thread carriers supported by said bars, two step-like pattern forming devices secured to said bars, and arranged one in advance of the other and a jointed bifurcated bar provided with roller-means, said bar arranged to step up or down, notch by notch, of said pattern forming devices, a spring connected with both members of said bifurcated bar and a cam controlled pawl and ratchet mechanism for actuating said bifurcated bar and thereby to permit of reciprocations of said horizontal bars, substantially as and for the purposes described.

In witness whereof, I have hereunto set my signature in the presence of two subscribing witnesses.

ALBERT GEE.

Witnesses:
CHAS. A. SIMONDET,
HARRY WRIGHT.

Sheet 1. 4 Sheets.

J. K. & E. E. Kilbourne.

Straight Knitting.

No. 19,370. Patented Feb. 16, 1858.

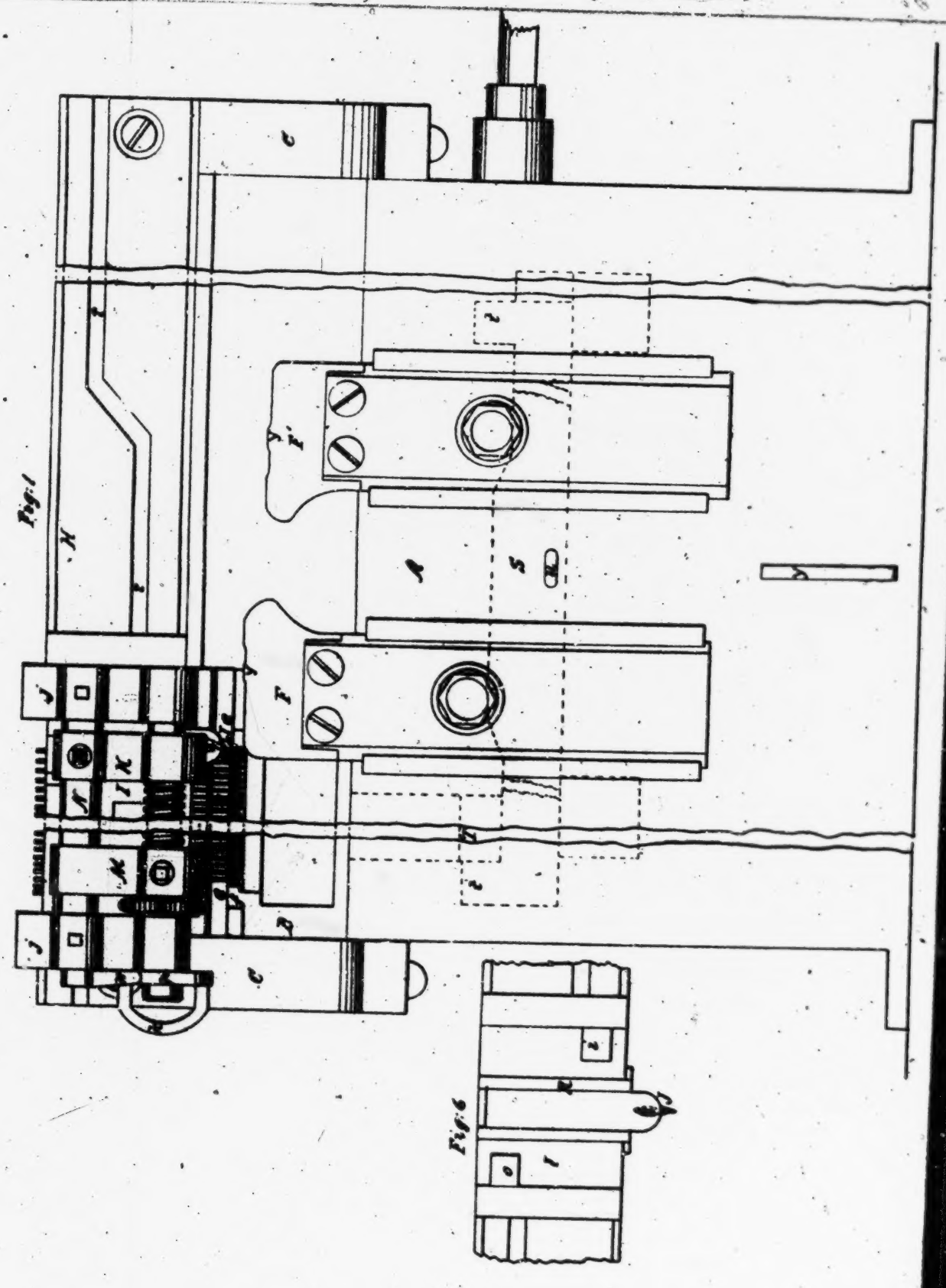

Sheet 2. 4 Sheets

J. K. & E. E. Kilbourne.

Straight Knitting.

No. 19,370. Patented Feb. 16, 1858.

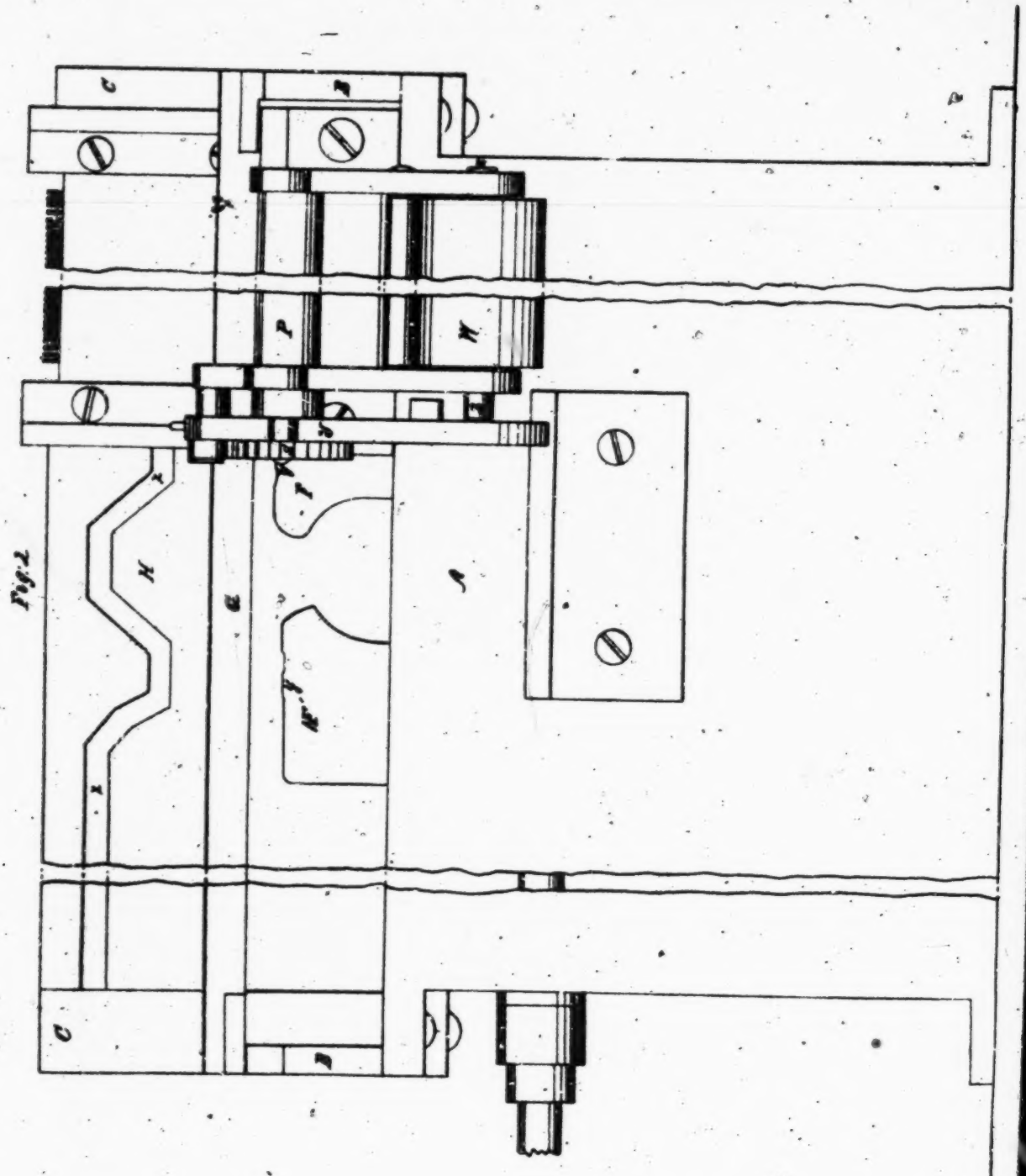

Sheet 3. 4 Sheets

J. K. & E. E. Kilbourne.

Straight Knitting.

No 19,370. Patented Feb. 16, 1858.

Fig 3

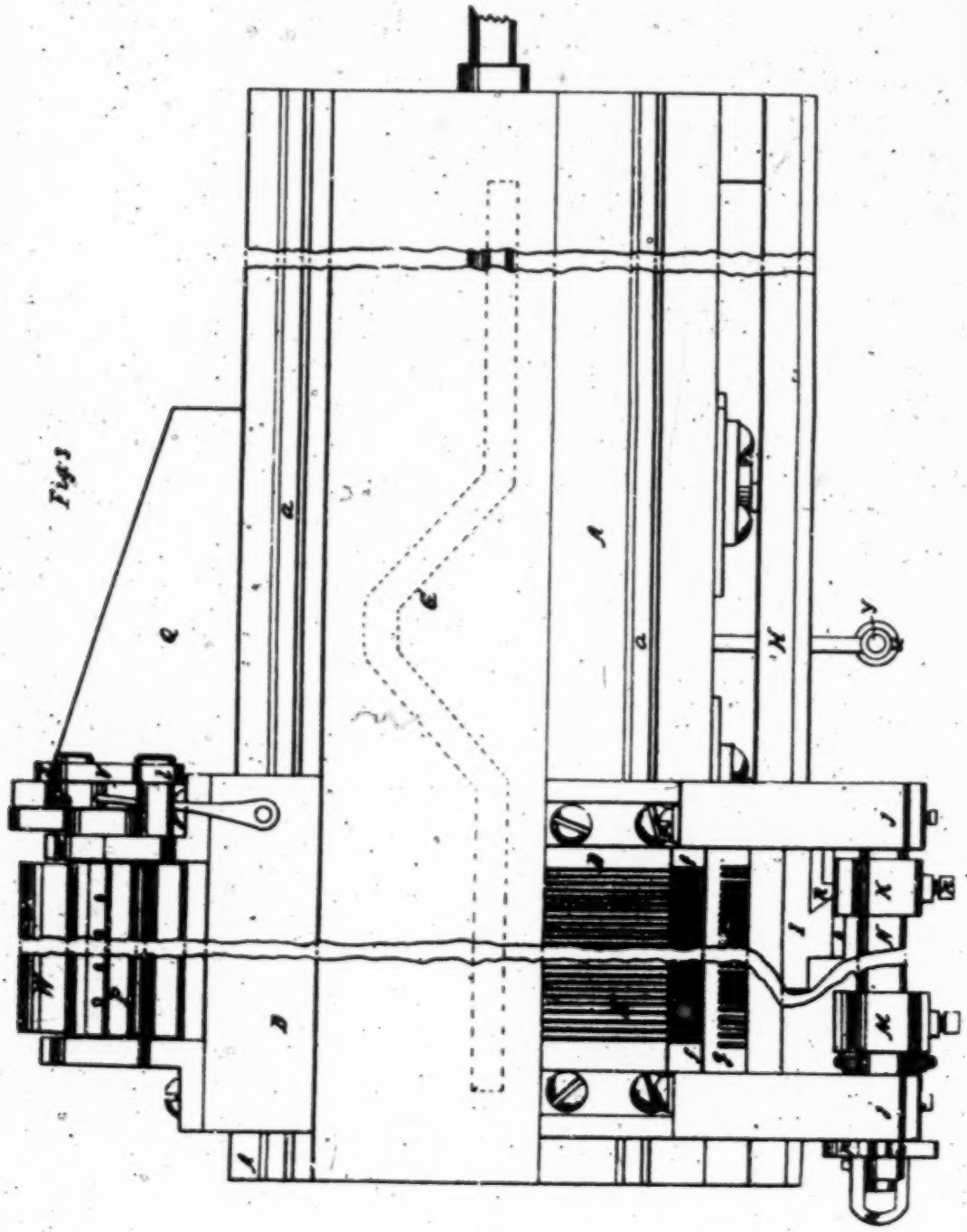

J. K. & E. E. Kilbourne.

Straight Knitting.

No. 19,370. Patented Feb. 16, 1858.

Fig. 4

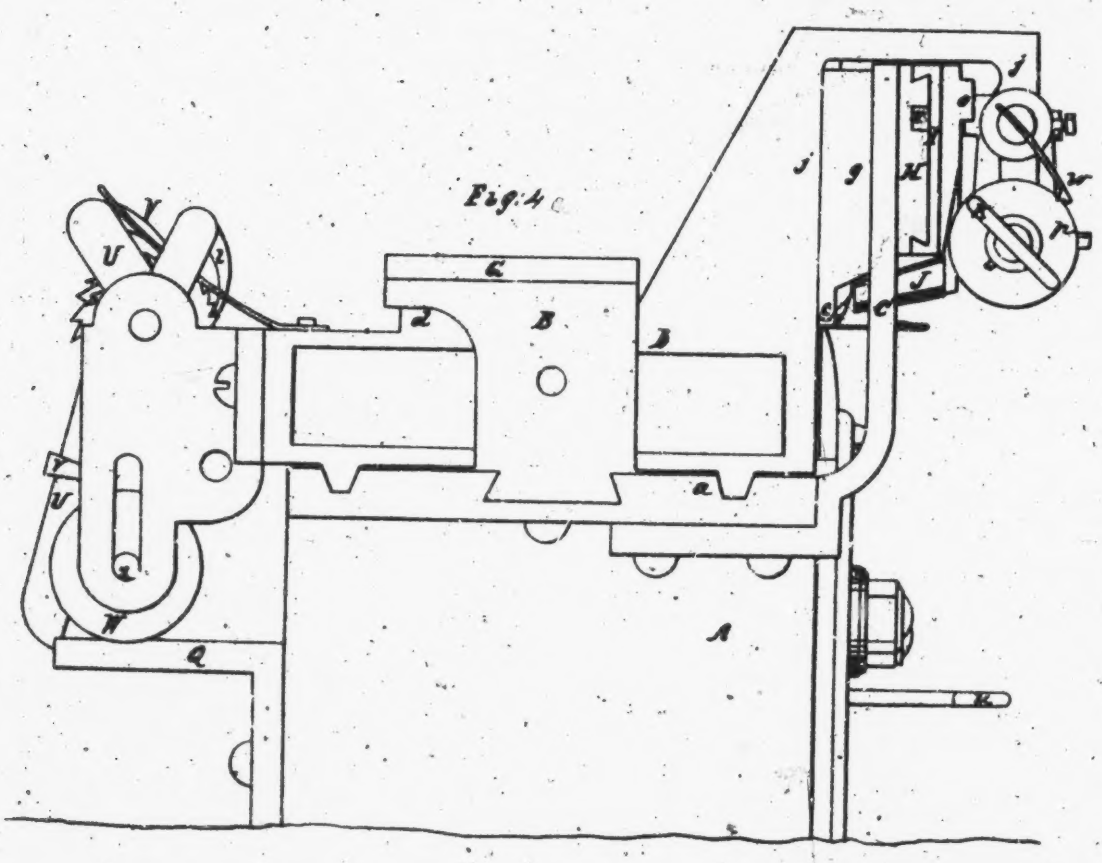

Fig. 5

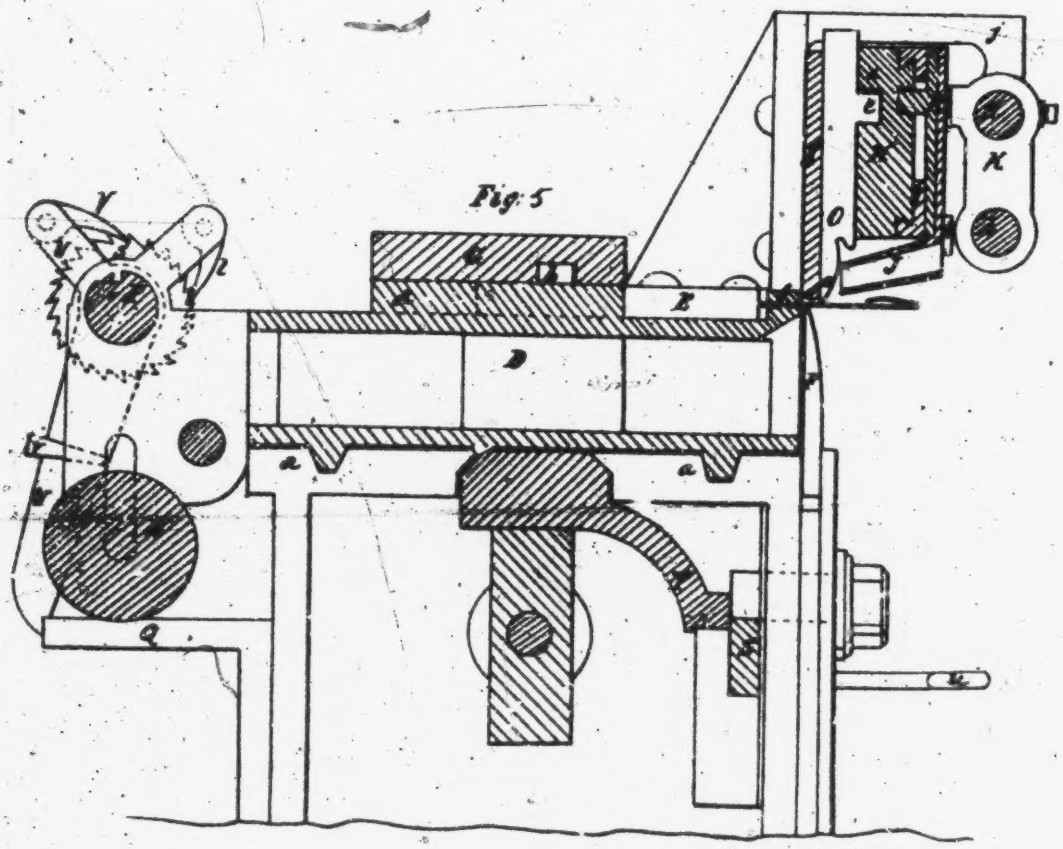

UNITED STATES PATENT OFFICE.

JOSEPH K. KILBOURN AND EDWARD E. KILBOURN, OF NORFOLK, CONN.

IMPROVEMENT IN KNITTING-MACHINES.

Specification forming part of Letters Patent No. **19,370**, dated February 16, 1858.

To all whom it may concern:

Be it known that we, JOSEPH K. KILBOURN and EDWARD E. KILBOURN, of Norfolk, in the county of Litchfield and State of Connecticut, have invented certain new and useful Improvements in Knitting-Machines, of which the following is a full, clear, and exact description, reference being had to the accompanying drawings, in which—

Figure 1 represents a front elevation of a knitting-machine with our improvements applied thereto. Fig. 2 is a back elevation of the same. Fig. 3 is a plan of the same. Fig. 4 is an end elevation of the same. Fig. 5 is a cross-section of the machine at the line *x x* of Fig. 3; and Fig. 6 is face view of the thread-guide carriage and a portion of the bar on which it traverses.

Our invention relates to that class of machines by means of which yarn is knit into fabrics; and the object of our invention is to facilitate the operation of the various acting parts of such machines, to diminish their cost, and to adapt them to the employment of self-acting apparatus for effecting the widening of the work.

The first part of our invention consists in mounting the needles, the sinkers, and their appurtenances in a reciprocating carriage, which is caused to travel to and fro upon stationary ways secured to the frame of the machine, which also has secured to it the cam-bars, by means of which the proper reciprocating movements are imparted at proper times to the needles and sinkers.

The object of the second part of our invention is to insure the uniform width of the stitches; and it consists in effecting this by causing the needles to slide in grooves whose sides converge as they approach the bottoms of the grooves which are fitted to the size of the needles.

The third part of our invention consists in combining with a reciprocating needle-carriage a second carriage, which supports the thread-guide in such manner that the latter is caused to move along with the former after the thread is fed to the whole range of needle, but is stationary while the needles and sinkers are forming the loops, although the needle-carriage is then moving.

The fourth part of our invention consists in widening the fabric by causing the thread-guide to pass down between one pair of needles and rise between another pair, this thread-guide being moved in the meantime by a motion that is independent of its ordinary reciprocating movement.

The fifth part of our invention consists in combining with a reciprocating needle-carriage under supports, which support the needles at the places where the loops are being formed and operate to close their barbs in succession.

The sixth part of our invention consists in combining with a reciprocating series of needles and sinkers stationary apparatus for imparting the necessary movements for forming the loops to different members of the series in succession, whereby the straining of the yarn in a flat knitting-loom is avoided and the apparatus for operating the needles and sinkers is concentrated at the center of the loom, and may be the same whatever number of needles is employed.

The several parts of our invention are embodied in the flat-knitting loom represented in the accompanying drawings. The various operating parts of this loom are supported by a strong rectangular bed-frame, A, which may be secured upon a table or bench at any convenient height for the operator who tends it. In the upper side of this frame there are two longitudinal V-shaped grooves, *a a*, which form ways which guide the needle carriage in traversing to and fro from one end of the frame to the other. The frame is also fitted with brackets B B C C, which sustain the cam-bars by whose action the proper movements are imparted to the needles and sinkers. The needles, as shown at Fig. 4, are of the ordinary form, and each is secured to a slide having a snug, *b*, upon it, by means of which it is moved to and fro. The sinkers, as shown at Fig. 5, are also of the ordinary form, and the shank of each one has a snug, *c*, by means of which it is moved to and fro.

The needle-carriage D is of rectangular form, and is mounted upon the bed-frame, its lower side being fitted with V-shaped feathers, which slide in the V-shaped grooves of the bed-frame. Upon the upper side of this carriage there is a block of metal, *d*, which extends its entire length, and has a series of transverse grooves in it to receive and guide the slides E of the

needles, for which it forms a bed. The needles project forward from this bed and pass through a corresponding series of transverse grooves in a bar, *f*, which extends along the front side of the carriage and forms the nosing or series of orifices, into which the needles are withdrawn to cast off the loops and from which they are protruded to receive the yarn to form a new series of loops. The grooves of this nosing have a V form, rounded at the bottom to fit the needle-wire and widening as they extend upward, so that when the needles are depressed they are caused by the forms of the grooves to place themselves at equal distances apart, and when they rise the widening of the grooves permits them to traverse freely in them, so that the uniform width of the stitches is insured without burdening the machine with an increased amount of friction.

A second block of metal, *g*, is supported by standards at the front side of the carriage. This also has a series of grooves in it, and forms a bed to receive and guide the shanks of the series of sinkers O, one of which intervenes between each two of the needles beneath. The lower edge, *e*, of this sinker-bed overlaps the nosing from which the needles protrude, and forms a bar, against the lower side of which the barbs of the needles are pressed by the action of the support F beneath to close them, so that they may pass through and cast off the loops already formed. The needle-bed *d* is surmounted by a stationary needle-cam bar, G, which is supported by the brackets B B on the main frame of the machine, and has the cam-groove in its lower face to receive the snugs *b* of the needle-slides, and thus impart motion to the needles as the carriage is moved from one end of the frame to the other. The form of the cam-groove is shown in dotted lines in Fig. 3. Immediately in front of the sinker-bed is the sinker-cam bar H, which is supported by the brackets C C, secured to the main frame. It has a cam-groove, *x*, in its hinder face to receive the snugs *c* of the sinker-shanks, and thus impart motion to the sinkers as the carriage moves to and fro.

The thread-guide J is situated in front of the sinkers, and is fitted to a carriage, I, which slides longitudinally upon ways secured to the front side of the sinker-cam bar H. The front side of this carriage has two snugs, *i* and *o*, secured to it, which are alternately struck by bumpers K and M, that are carried along by the needle-carriage D. These bumpers are hung upon a traverse-bar, N, that is supported by the overhanging extremities of the standards *j*, which secure the sinker-bed to the needle-carriage. The lower extremities of the bumpers are traversed by a screw, L, which turns in bearings attached to the standards *j*. One of the bumpers K is adjustable, so that it can be slid along the traverse-bar N and screw L, and secured in any desired position by means of a set-screw, *n*. The other bumper is also adjustable; but its position is determined by the screw L, which works in a nut, *m*, secured to the bumper M, and has a handle, *k* at one of its ends to turn it. The pitch of this screw is equal to the space between the centers of the needles, so that by turning it one or more revolutions the bumper is moved along one or more needles. The shank of the screw has a collar, *p*, upon it, which has a notch in it to receive a spring-pawl, *w*, by which the screw is secured after it has been turned to set the needle in any required position. The thread-guide J has the form of a flattened tube, whose upper and lower edges will readily enter and pass through the space between the needles. Its shank is secured to a slide, R, which slides vertically in a broad dovetailed groove formed in the face of the thread-guide carriage I. The hinder side of the slide has a snug secured to it, which is received in and operated by a cam-groove, *r*, formed in the front side of the sinker-cam bar H, so that as the thread-guide carriage is propelled to and fro by the alternate contact of its snugs with the bumpers secured to the needle-carriage the thread-carrier is depressed below and raised above the needles.

A pair of movable supports, F and F′, are supported in guides upon the front side of the main frame in such manner that they can be raised and depressed in alternate succession. The inner side of the shank or slide of each support has a snug secured to it, which passes through a slot in the bed-frame and rests upon a sliding bar, S, (represented in dotted lines in Fig. 1.) The upper edge of this sliding bar is inclined at certain parts of its length, and as the sliding bar is moved longitudinally to and fro these inclined planes pass under the snugs and raise the supports or permit them to descend out of the way of the needles. The sliding bar is moved to and fro at the proper times by means of a driver, T, secured to the needle carriage D, which driver alternately comes in contact with snugs ′, secured to the hinder face of the sliding bar, as the carriage approaches the opposite extremities of its range of motion.

The cloth-roll upon which the work is rolled up and the take-up motion are situated at the hinder side of the carriage. They may be of any construction which will perform the duties required of them. In this example the cloth-roll P is a simple cylinder having a longitudinal groove in it, in which hooks are secured, to which the end of the work is made fast. One of the journals of this cloth-roll projects beyond its box, and is fitted with a ratchet-wheel, *s*, whose teeth are operated upon by a finger, V. The latter is secured to the upper arm of a lever, U, whose lower arm hangs within the range of a stationary inclined plane, Q, secured to the back of the frame of the machine.

Below the cloth-roll there is a heavy tension-roller, W, around which the cloth is passed before it is secured to the cloth roll. The jour-

nals *z* of this tension-roll pass through slots in the hangers which support it, so that it can rise and fall and maintain a constant strain upon the work. One of its journals is prolonged beyond the hanger so as to protrude beneath a wedge-formed stop, *v*, secured to the face of the longer arm of the finger lever, so that when the tension-roller is raised by the winding up of the cloth its journal, bearing against the stop *v*, prevents the finger-lever from moving the finger V, which turns the beveled wheel. When, on the contrary, the tension-roller descends by reason of the increase in the length of the work, its journal, leaving the stop, permits the finger-lever to vibrate and move the finger V to a new tooth of the ratchet-wheel, so that the returning vibration of the finger-lever, by the action of the inclined plane over which it is drawn by the reciprocating movement of the carriage, impels the finger against the ratchet-tooth and causes it and the yarn-roll to turn.

In order to prevent the return of the yarn-roll when the finger is shifting from tooth to tooth, a spring pawl, *l*, is pivoted to the frame to act upon the ratchet-teeth.

The yarn to be knit is wound upon a tube, so that it will deliver readily, and the tube is supported upon a standard, Y, which projects from the front side of the bed-frame. Above this standard there is an eye, *u*, through which the yarn is passed, after which it is passed through the thread-guide J, and thence to the needles and sinkers.

In order to understand the operation of the machine when it is at work, let it be supposed that the carriage D is long enough to carry a sufficient number of needles and sinkers to knit the widest cloth that is required, and that the carriage is at the left-hand side of the machine, the support F being at its highest position. Let it also be supposed that the machine is knitting straight work of the full width of which it is capable. When the carriage is in this position the thread-guide is at the right-hand end of the series of needles, as represented in Fig. 1, and the yarn leads from the needle nearest the thread-guide. If, now, the carriage be moved to the right, the needles and sinkers in succession pass by the thread-guide, which, remaining stationary, feeds out the yarn to the needles as they pass. As the needles in passing ride over the support F the sinkers are caused by the action of their appropriate cam-groove to descend in succession between the needles and carry down folds of yarn, thus forming loops upon the needles, and as the descent of the sinkers is successive and but a small portion of the whole is in process of descent simultaneously, the yarn to form the loops is drawn under but these few sinkers at a time and with only a slight strain upon it or the machine. As the sinkers descend the continued progression of the carriage carries the needle-slides along the inclined portion of the needle-cam bar and causes the needles to be drawn into the orifices from which they protrude. As this operation is taking place while the needles are riding over the highest part of the support F, they are pressed up by its action against the bar *e* of the sinker-bed. The pressure thus produced closes the barbs of the needles, so that as they are drawn into the orifices they enter and pass through the series of loops of yarn previously formed, and, drawing the new set of loops with them through the previous set, cast off the latter. The withdrawal of the needles into their orifices takes place simultaneously with the ascent of the sinkers by the action of their cam-bar, so that the folds of yarn formed by the latter are rendered up to the needles as they enter their orifices. When in the motion of the carriage the set of needles has passed the thread-guide the bumper M, striking the corresponding snug, *i*, on the thread-guide carriage, causes it to move with the needle carriage, so that no more yarn is fed by the movement of the latter past the former. While the two carriages are moving together the thread-guide is caused to descend by the action of its cam-groove and to rise again as the needle-carriage approaches the extremity of its stroke, and when the needle-carriage comes to rest the thread-guide is at the left-hand end of the series of needles, ready to feed out yarn when the needles are moved from right to left. While the carriage is progressing from left to right the right-hand support is at its lowest position, as shown at Fig. 1, so as to afford no obstruction to the protrusion of the needles as their slides are again acted upon by the right-hand inclined portion of their cam-bar; but as the carriage reaches the extremity of its stroke the driver T, secured to it, striking the appropriate snug on the bar S, causes the latter to move, thus raising the right-hand support and depressing the left-hand one. The parts of the machine are now ready for the return-stroke of the needle-carriage, which is followed by a repetition of the above-described movements. In this return movement the opposite bumper K acts upon the appropriate snug *o* of the thread-guide carriage and returns the latter to its first position after the needles have all passed the thread-guide. The driver T also acts upon the opposite snug of the bar S to change the position of the supports.

In forming goods of varying widths, which is the kind of work for which this machine is specially adapted, the adjustability of the thread-guide is brought into action. In this case the narrowest part of the stuff is formed first, and the bumper M is set by turning the screw L in such manner that it will strike the appropriate snug of the needle-carriage and cause the thread-guide carriage to move with the needle-carriage when the yarn has been delivered to only a portion of the needles instead of the whole, the number so fed, and consequently the width of the work, being determined by the position of the bumper M, which is gov-

erned by the screw. By this new position of the bumper the thread-guide is sooner put in motion, and hence it is caused to descend between a pair of the needles, instead of at the end of the whole series. The needles between the descending thread-guide and the left-hand end of the carriage are thus cut off from the rest, and the width of the work is proportioned to the number of the remaining set of needles. If, now, the work is to be widened, the screw is turned to move the bumper toward the left-hand end of the needle-carriage after the thread-guide has descended and before it rises, and as the pitch of the screw in this instance is equal to the distance between the centers of the needles, each turn causes the thread-guide to rise a needle later. The thread is thus cast over an additional needle during the movement of the carriage from left to right, and the work is correspondingly widened, while as the new loop thus produced is formed of the yarn leading from the last loop of the preceding row, a selvage-edge is produced upon the tapering part of the work.

The present machine is adapted to the widening of the work at one side only; but by constructing the traverse-bar N in the form of a screw, like the lower screw, and causing it to act upon a nut in the second bumper, K, the thread-guide may be operated to widen the work at either side at pleasure. If, on the other hand, the lower screw have at one end a right-handed screw-thread and at the other end a left-handed screw-thread, each thread operating on a nut secured to one of the bumpers, the widening would be effected at the opposite edges of the work equally in opposite directions by the turning of the one screw, L. Narrowing the work may be effected by turning the screw in the reverse direction to that for widening. The work formed is drawn beneath the upper side of the carriage, is passed around the tension-roller, and is applied to the take-up roller P, upon which it is wound as it is formed by the operation of the take-up motion.

By the system we have devised of supporting the needles and sinkers upon a traversing carriage the whole of the work of knitting is performed near the center of the machine, and the cam-bars and supports, which are subjected to the greatest strains, may all be secured firmly to the bed-frame, while at the same time the positions of the needle and sinker cam bars relatively to their needles and sinkers tend to bear the latter downward and prevent any tendency in the needle-carriage to rise from its ways. An examination of the supports shows that their upper edges deviate from a straight line, and these deviations are important. When the needles in their movements first reach each support they move over the lowest portion of the latter, so that the needles are then permitted to rest in the lowest portions of the orifices of the needle-bed. As these orifices are contracted at their bottoms so as to fit the needles, the latter, in being depressed to the bottoms of the grooves by the forcing down of the folds of yarn by the sinkers, are caused to arrange themselves at equal distances apart, whereby the uniformity in the sizes of the folds, and consequently of the loops, is insured. The elevation of the edge of the support at y above its lowest level is an advantage, as the raising of the needles at this point permits the slope of the sinker-cam groove to be made less abrupt than it would otherwise have to be, and thus enables the machine to be operated with less friction. The elevation of the highest portion of the support is a matter of necessity, as it raises the needles in succession and causes their barbs to press against the bar above, by which they are closed.

In the foregoing description the take-up mechanism is described as moving along with the needles and sinkers. This combination permits the employment of a very simple take-up mechanism and obviates the difficulty that would arise from the use of a reciprocating series of needles and sinkers with stationary take-up mechanism, as in the latter case some means would have to be devised to give back and take up cloth as the needles and sinkers move to and fro.

It will be evident to the skillful engineer that portions of our machine may be modified without affecting the principle of our invention, and we contemplate so to modify the various parts of our machine as circumstances may render expedient. Thus, for example, the take-up motion we have described may be varied by substituting a pair of nipping and drawing rollers in place of the single cloth-roll, in which case the fabric will be delivered from the pair of rollers in a flat sheet. Motion may also be imparted to the feed-carriage by a segment and rack, or by a crank, or by an eccentric, or in any manner that may be convenient.

What we claim as our invention, and desire to secure by Letters Patent, is—

1. Combining the needles and sinkers with a reciprocating carriage operating substantially as herein set forth.

2. The adjustment of the position of the needles at the time the sinkers are forming the folds of yarn by means of grooves in the nosing, whose sides converge so as to insure the uniform width of the stitches.

3. The combination of a reciprocating series of needles with a reciprocating thread-guide, operating, substantially as herein set forth, so as to move at times with the needles and to remain stationary at other times when the needles are moving.

4. The varying of the width of the fabric by causing the thread guide to pass down between one pair of needles and to rise between another pair by mechanism operating substantially as herein set forth, thus producing a selvage-edge where widening is effected.

5. The combination of under supports, operating substantially as herein set forth, with a reciprocating series of needles, so as to sup-

port the needles and effect the closing of their barbs.

6. Combining with a reciprocating series of needles and sinkers cam-bars or their equivalents in such manner as to impart the necessary movements for forming the loops to the several members of the series in succession, substantially as herein set forth.

7. Combining a reciprocating series of needles and sinkers with reciprocating mechanism for taking up the work as it is formed, substantially as herein set forth.

In testimony whereof we have hereunto subscribed our names.

JOSEPH KILBOURN.
EDWARD E. KILBOURN.

Witnesses:
PETER CURTISS,
A. G. PETTIBONE.

517

G. A. LANDENBERGER.

KNITTING MACHINE.

APPLICATION FILED NOV. 16, 1912.

1,134,749.

Patented Apr. 6, 1915.

6 SHEETS—SHEET 1.

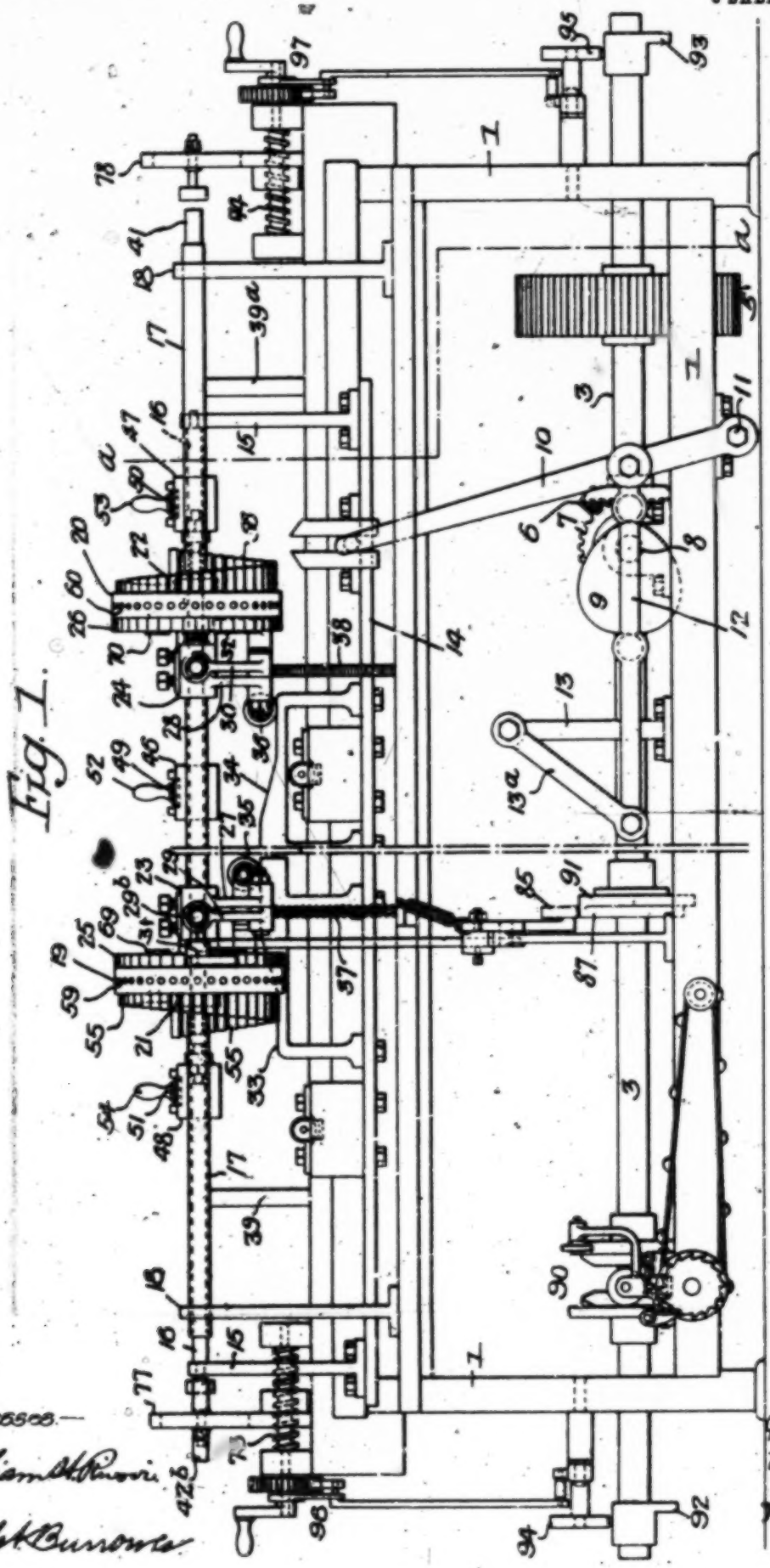

Fig. 1.

Witnesses—

William A. Rossi

Willet Burrows

Inventor

Gustav A. Landenberger

by his Attorneys

Howson & Howson

518

G. A. LANDENBERGER.

KNITTING MACHINE.

APPLICATION FILED NOV. 16, 1912.

1,134,749.

Patented Apr. 6, 1915.

6 SHEETS—SHEET 2.

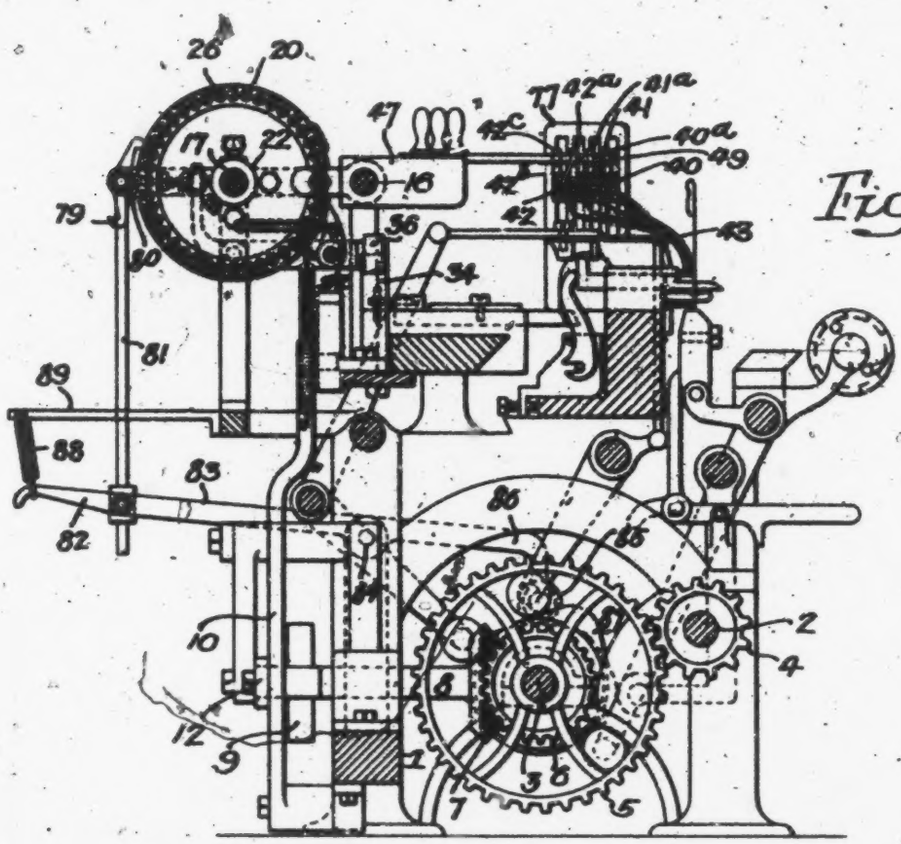

Fig. 2.

Fig. 4.

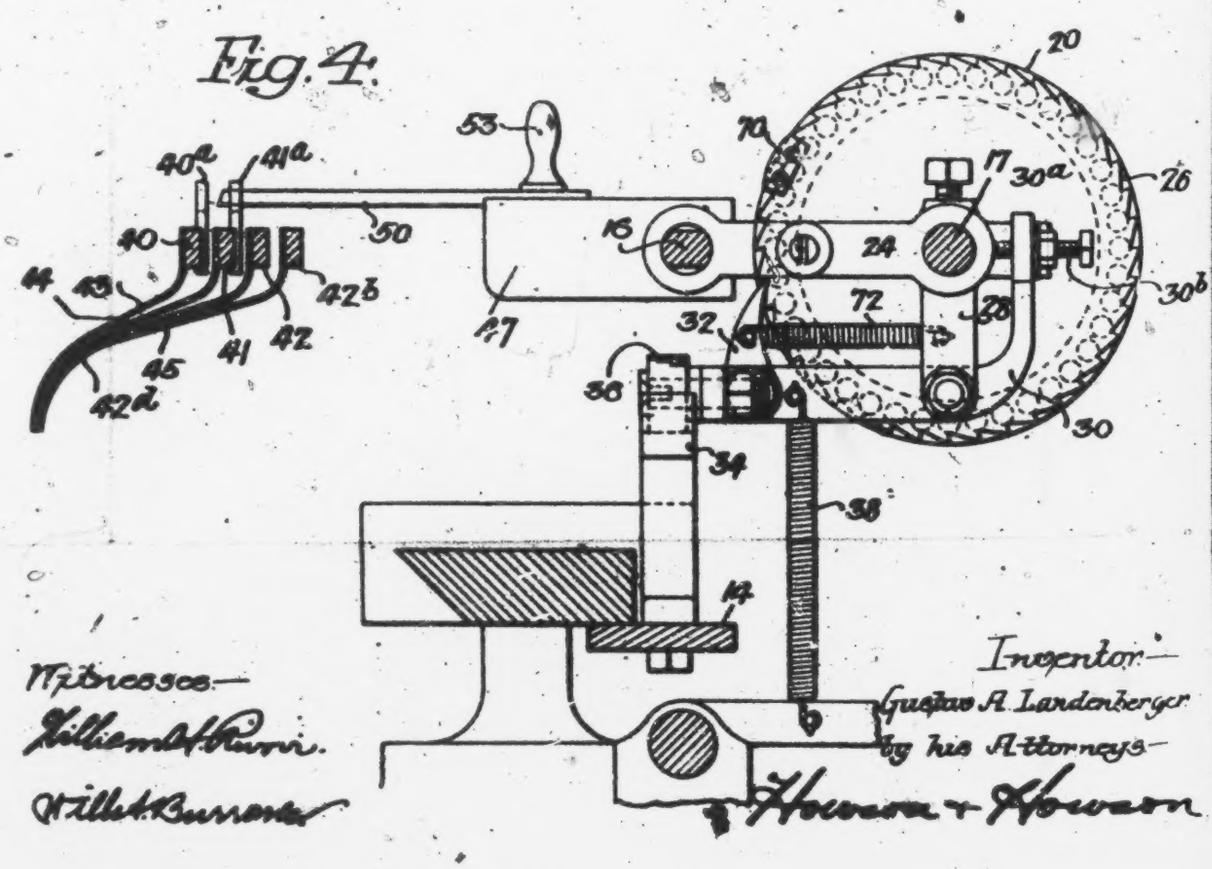

Witnesses—

William A. Runn.

Willet Burrows

Inventor—

Gustav A. Landenberger

by his Attorneys—

Howson & Howson

519

G. A. LANDENBERGER.

KNITTING MACHINE.

APPLICATION FILED NOV. 16, 1912.

1,134,749.

Patented Apr. 6, 1915.

6 SHEETS—SHEET 3.

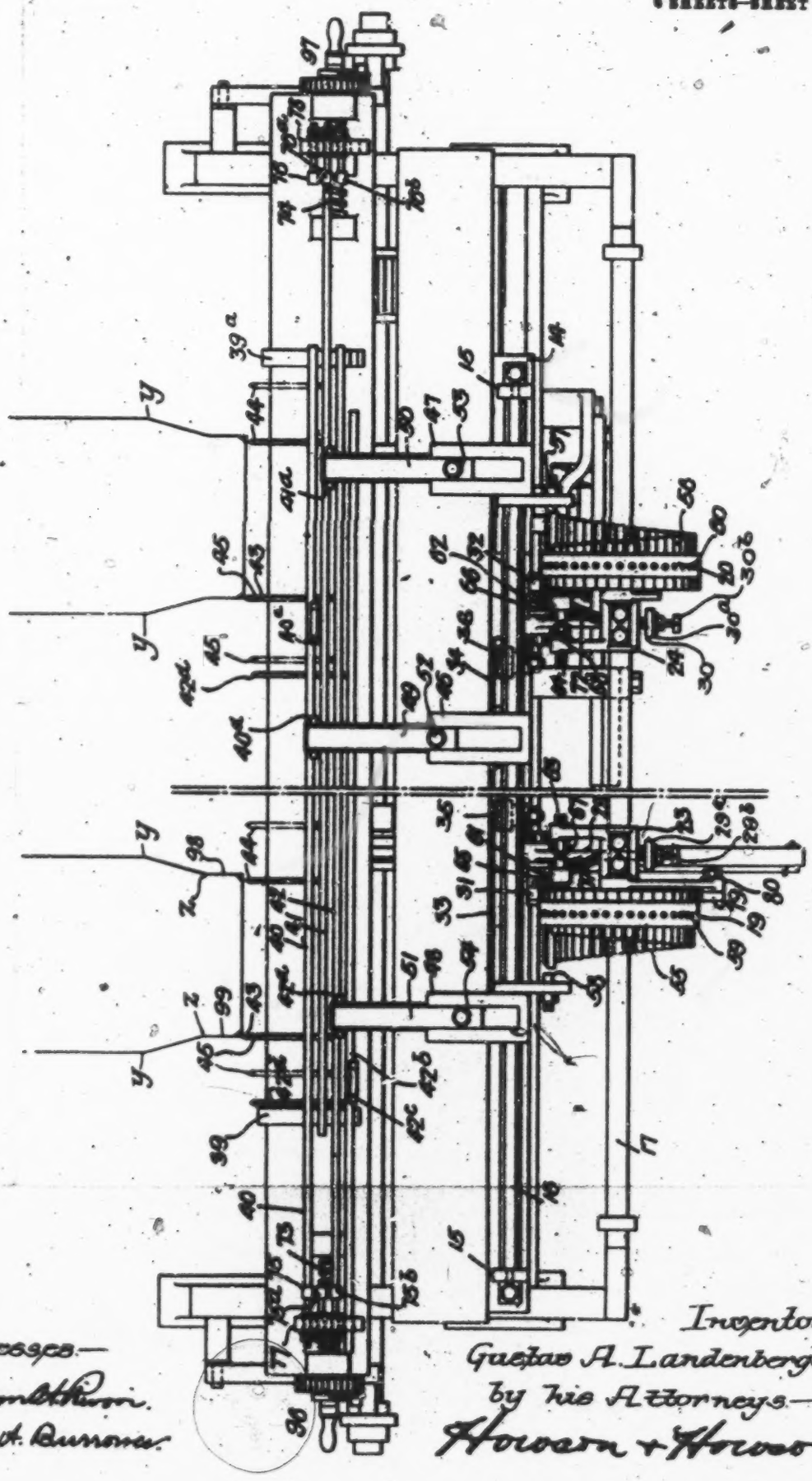

Fig. 3.

Witnesses—
William A. Rivon.
Willis A. Burrows.

Inventor—
Gustav A. Landenberger.
by his Attorneys—
Howson & Howson.

520

G. A. LANDENBERGER.

KNITTING MACHINE.

APPLICATION FILED NOV. 16, 1912.

1,184,749.

Patented Apr. 6, 1915.

6 SHEETS—SHEET 4.

Fig. 5.

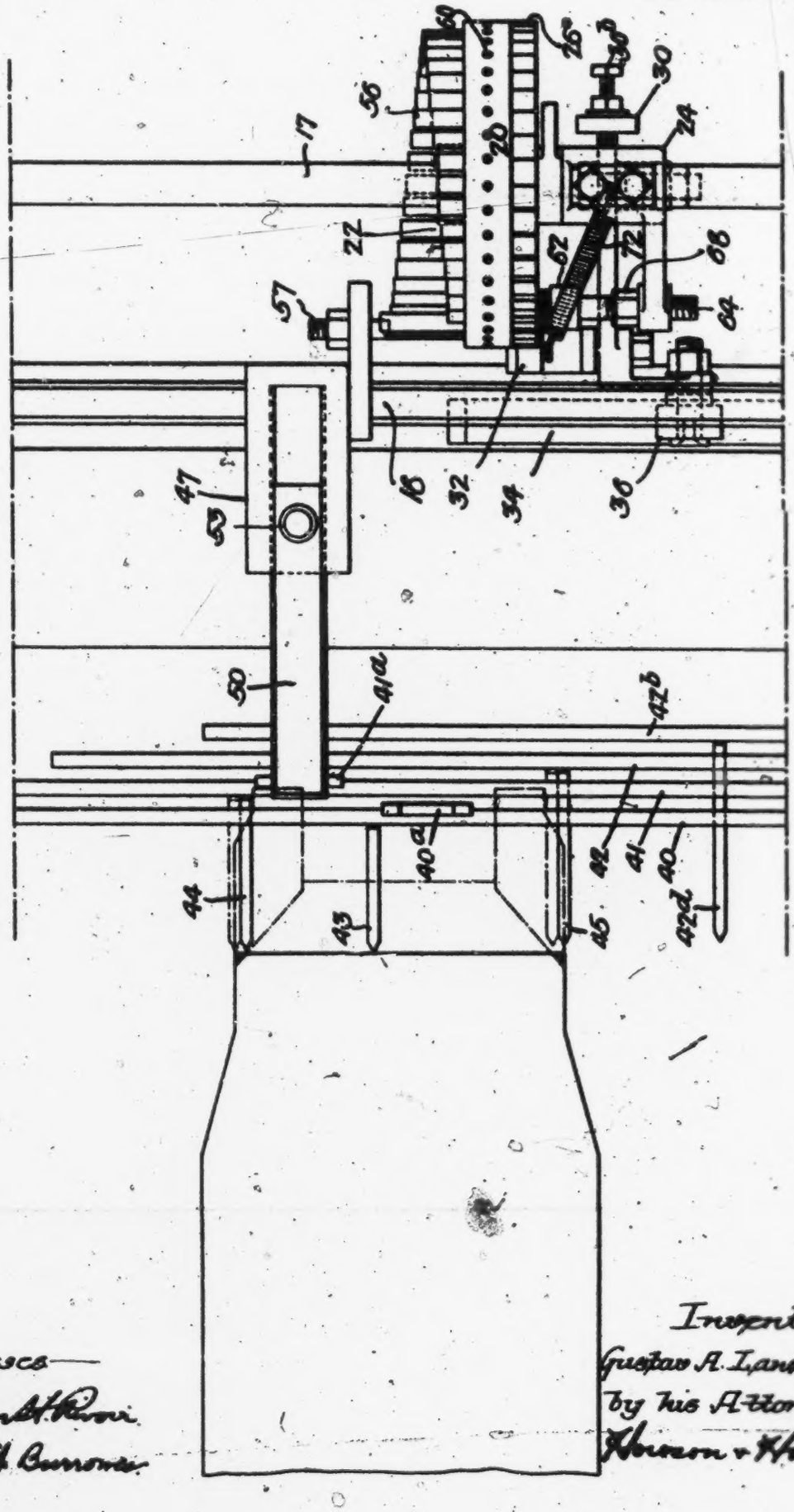

Witnesses—
William A. Rossi
Wills & Burrows

Inventor—
Gustav A. Landenberger
by his Attorneys—
Howson & Howson

521

G. A. LANDENBERGER.
KNITTING MACHINE.
APPLICATION FILED NOV. 18, 1912.

1,134,749.

Patented Apr. 6, 1915.
6 SHEETS—SHEET 5.

Fig. 6.

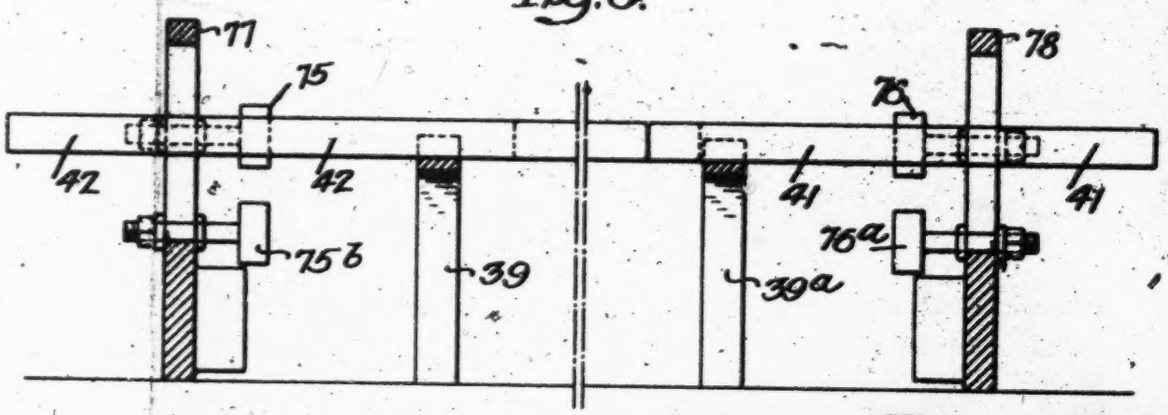

Fig. 13.

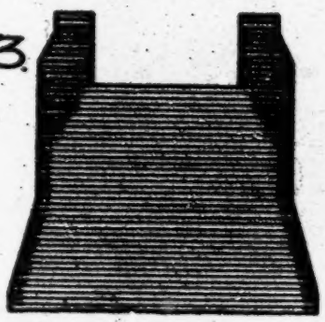

Fig. 7.

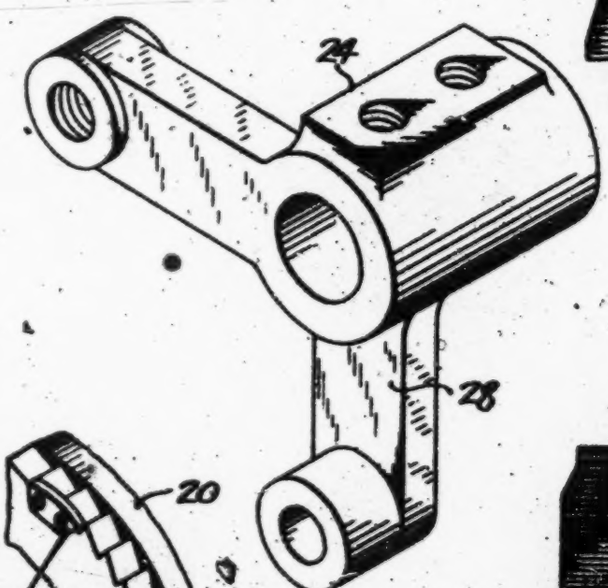

Fig. 14.

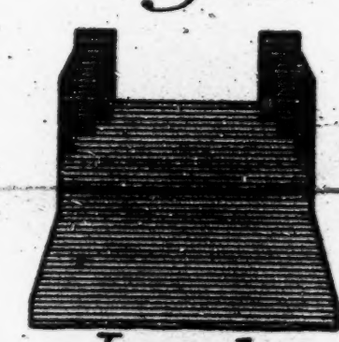

Fig. 12.

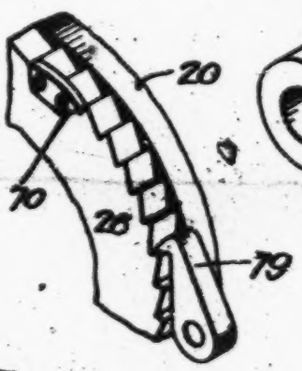

Witnesses.—
William H. Pierce.
Willet Burrows

Inventor.—
Gustav A. Landenberger.
by his Attorneys.—
Howson & Howson

522

G. A. LANDENBERGER.
KNITTING MACHINE.
APPLICATION FILED NOV. 18, 1912.

1,134,749.

Patented Apr. 6, 1915.
6 SHEETS—SHEET 6.

Fig. 8.

Fig. 9.

Fig. 10.

Fig. 11.

Witnesses—
William H. Rivoir
Willa A. Bunnow

Inventor—
Gustav A. Landenberger
by his Attorneys—
Howson & Howson

UNITED STATES PATENT OFFICE.

GUSTAV A. LANDENBERGER, OF PHILADELPHIA, PENNSYLVANIA.

KNITTING-MACHINE.

1,134,749. Specification of Letters Patent. Patented Apr. 6, 1915.

Application filed November 16, 1912. Serial No. 731,880.

To all whom it may concern:

Be it known that I, GUSTAV A. LANDENBERGER, a subject of the Emperor of Austria-Hungary, having declared my intentions of becoming a citizen of the United States, residing in Philadelphia, Pennsylvania, have invented certain Improvements in Knitting-Machines, of which the following is a specification.

My invention relates to knitting and consists of yarn-feed controlling mechanism for knitting machines, being particularly serviceable for controlling the movement of the yarn carriers which feed extra or reinforcing threads to certain of the needles, such for example as to the needles which form heel portions of stockings on straight knitting frames such as the "Cotton" type which have a plurality of banks of needles; each bank being capable of knitting a separate stocking leg or other fabric.

Heretofore in the manufacture of full fashioned stockings on straight knitting machines of the above described type, the splicing or reinforcing threads for the heel portion were generally inserted in such a manner that the line of intersection between the reinforced knitted web, constituting the heel portion, and the ordinary knitted web, constituting the main portion of the stocking, ran in a line substantially at right angles to the wales of the web. This abrupt change caused a very unsightly portion in the stocking which tended to detract from the graceful lines caused by the shaping of the leg portions and the ankle portion.

One object of my invention is to provide a knitting machine with mechanism which will control the feeding of the splicing or reinforcing threads to the needles in such a manner that the line of intersection between the reinforced heel portion and the ordinary web constituting the leg portion will run at an incline to and gracefully intersect and merge into the wales of the leg portion.

Another object is to form a reinforced selvage along each edge of the fabric, said selvage conforming to the fashioning of the fabric and merging into a reinforced heel portion; the lines of intersection between the heel portion and the selvage and the web constituting the main leg section running at an incline to the wales of the fabric.

A still further object is to make the mechanism of my invention of a durable and simple construction which is easy of operation and which may be made and maintained at a very low cost.

These and other objects which will be hereinafter described I attain in the following manner, reference being had to the accompanying drawings in which:

Figure 1, is a rear elevation of sufficient of a straight knitting machine of the above described type to illustrate my invention; Fig. 2, is a sectional end view taken on the line *a*—*a* Fig. 1; Fig. 3, is a plan view of the mechanism shown in Fig. 1; two banks of needles being shown; Fig. 4, is an enlarged sectional end view of certain of the mechanism comprising my invention; Fig. 5, is a plan view of Fig. 4 showing a diagrammatic representation of a stocking leg made with the aid of my invention; Fig. 6, is a fragmentary sectional elevation showing different positions of certain of the elements; Fig. 7, is a detail perspective view of one of the supporting members forming a part of my invention; Fig. 8, is a diagrammatic representation in a flat state of a stocking leg capable of being knitted by the aid of my invention; Fig. 9, is another diagrammatic representation in a flat state of a stocking capable of being made by the use of my invention, and which shows a reinforced selvage adjacent the seaming edges, said selvage merging into a reinforced heel section in which the line of intersection between the reinforced heel portion and the plain web runs at an incline to the wales of the fabric; Fig. 10, shows a stocking leg completed from the fabric shown in Fig. 8 and having a foot portion knitted thereto; Fig. 11, shows a stocking leg completed from the fabric as shown in Fig. 9 and having a foot portion knitted thereto; Fig. 12, is a fragmentary perspective view showing a hook pawl in engagement with a ratchet forming part of the operating mechanism of my invention; and Figs. 13 and 14, are views of modified forms of heel reinforcements, capable of being made with my invention.

Referring to the drawings, 1 is the main frame of a straight knitting machine, of the above described type, forming a support for a main power shaft 2 and a cam shaft 3 having intermeshing gear wheels 4 and 5 respectively. The cam shaft 3 is provided with a beveled gear 6 which meshes with a gear 7 on the shaft 8; the latter being known as the "Coulier" shaft and having keyed thereon a cam 9. A reciprocable lever 10 is

pivoted to the frame 1 at 11 and in turn has pivoted thereto a link 12 pivotally swung from a stanchion 13 by means of an arm-link 13ª. Anti-friction rollers are journaled within the link 12 in such a manner that the cam 9 will operate therewith to actuate the said link 12 to reciprocate the lever 10 as is obvious from the construction shown in Fig. 1 of the drawing.

The frame 1 forms a support for the cock-box bar 14 and the lever 10 is so arranged as to engage and impart a reciprocating movement to the said cock-box bar. Supports 15 are rigidly fixed to the cock-box bar 14 and in turn form a support for a friction shaft 16; the latter being rigidly fixed in the said supports 15. The elements above mentioned are of a construction well known in the art. A shaft 17, which will be hereinafter termed the "pattern" shaft, is rigidly mounted on supports 18; the latter being mounted on frame 1. The shaft 17 forms a journal for two pattern drums 19 and 20 which are rotatable thereon but prevented from having any longitudinal movement by collars 21 and 22 and two-armed castings 23 and 24 respectively. The drums 19 and 20 are provided with ratchet wheels 25 and 26 respectively. The arms 27 and 28 of the castings 23 and 24 form pivotal supports for double ended levers 29 and 30; the latter having pawls 31 and 32 respectively pivotally mounted thereon; the pawls 31 and 32 being adapted to engage and being wide enough to project beyond the outer edge of the ratchet wheels 25 and 26, respectively.

The cock-box bar 14 forms a support for cams 33 and 34 and imparts a reciprocating movement thereto. The levers 29 and 30 have antifriction rollers 35 and 36 respectively which are so placed as to be engaged during the reciprocation of the cock-box bar 14 by the respective cams 33 and 34 to lift the levers 29 and 30 to cause the pawls 31 and 32 to rack with the respective ratchet wheels and intermittently move the drums 19 and 20 on their axes. The pawl supporting ends of the levers 29 and 30 are normally held in their lowest positions by means of tension springs 37 and 38 which are connected to the respective levers 29 and 30 and to a fixed portion of the machine. The ends 29ª and 30ª of the levers 29 and 30 are provided with adjusting or set screws 29ª and 30ª; the ends of the said set screws being adapted to be moved toward or from the respective castings 23 and 24 so as to be able to adjust the movement of the said levers 29 and 30 with respect to the cams and to the ratchet wheels 25 and 26.

The carrier-rod stands 39 and 39ª are rigidly attached to the frame 1 and in the present instance form a slidable support for four carrier rods 40, 41, 42 and 42ª. The carrier rod 40 is the main carrier rod and has attached thereto a plurality of yarn guides or thread carriers 43, each of said carriers 43 being adapted to feed a thread to the needles of one section or bank of the machine in a multiple section machine such as herein described and illustrated to produce the leg portions of the stockings. The carrier rod 41 has a plurality of yarn guides or thread carriers 44; each being adapted to carry and feed an extra splicing or reinforcing thread to certain of the needles also fed by the carriers 43 to produce one-half of the reinforced heel portion of a stocking leg knitted on one section or bank of the needles. The carrier rod 42 has a plurality of yarn guides or thread carriers 45, and each of said carriers is adapted to carry and feed an extra splicing or reinforcing thread to certain needles also fed by the carriers 43 of respective banks of needles to produce the other half of the reinforced heel portions of the respective stocking legs as clearly shown in the several views of drawing.

The friction shaft 16 as illustrated in the accompanying drawings forms a support for three friction boxes 46, 47 and 48. These friction boxes may be of any well known construction having a friction producing substance such as leather or the like—always in contact with the friction shaft so that each friction box will slide over the friction shaft if sufficient force is applied thereto but ordinarily will move with the friction shaft. The friction boxes 46, 47 and 48 have slides 49, 50 and 51 respectively which may be moved by means of respective handles 52, 53 and 54 in a direction toward the carrier bars. The slide 49 when extended is adapted to pass between the prongs of a fork 40ª fixed to the bar 40. The slide 50 when extended is adapted to pass between the prongs of a fork 41ª fixed to the bar 41. In like manner the slide 51 when extended is adapted to pass between the prongs of a fork 42ª fixed to the bar 42 as clearly shown in Fig. 3. The carrier rod 42ª is only used in finishing the heel portion and is provided with a fork 42ª for a purpose hereinafter described. The frictional contact between each friction box and the friction shaft is such that the movement of the friction shaft will be imparted through the medium of the friction boxes to respective thread carrier bars unless the movement of the latter is obstructed in any manner. However, if the thread carrier bars 40, 41 and 42 are obstructed in their movement in either direction before the friction shaft has finished its movement in corresponding directions the latter will slip through the several friction boxes which necessarily stop when their respective thread-carrier bars are stopped and when their slides are in engagement with respective forks. Thus it will be seen that if mecha-

nism having a portion of varying contour is positioned so as to limit to different extents the movements of the several thread carrier bars, the thread carriers will be moved correspondingly to different extents and thereby feed yarn to different and variable numbers of needles in each bank or set of needles. To accomplish this end I set and fix within each pattern drum 19 and 20 by lock screws 59 and 60 respectively a series of pins 55 and 56 of varying length and mount on the friction boxes 47 and 48 adjustable abutment pins 57 and 58; the pin 57 being adapted to contact with the pins on the pattern drum 20, while the pin 58 is adapted to contact with the pins on the pattern drum 19. As shown in the accompanying drawings the pins are disposed in an annular figure and a movement of one tooth of each ratchet is sufficient to move successive pins into the path of their respective abutment pins on the friction boxes. The pins on the pattern drums 19 and 20 are prevented from working loose or varying their projected lengths by means of the lock screws 59 and 60 respectively.

In order to prevent the over running of the pattern drums due to their inertia caused by the movement of the respective pawls engaging the ratchet wheels thereon, I provide brakes 61 and 62 which in the present instance comprise threaded stems 63 and 64 having receptacles 65 and 66 adjacent one end; said receptacles having friction producing material forming shoes mounted therein and projecting therefrom so as to engage a surface of the pattern drums. The stems 63 and 64 may be adjusted by means of a screw-driver or other means so as to move the friction shoe toward or from the surface of the pattern drum. After being adjusted the brakes may be locked by means of nuts 67 and 68. These brakes are also so positioned as to counteract any lateral movement of the pattern drums which would otherwise be caused when the abutment pins contact with their respective pattern pins.

The ratchet teeth, as shown in the drawings adjacent respective short pattern pins of each pattern drum, are prevented from being engaged by the pawls 31 and 32 by dwell plates 69 and 70, which are screwed to the ribs of the ratchets and beyond the periphery of the ratchet teeth. However, these dwell plates may be moved to project beyond any of the teeth if it is so desired for any purpose, and their function will be described more fully in the operation of the machine. Tension springs 71 and 72 are connected between respective pawls 31 and 32 and tend to hold the said pawls in engagement with their respective ratchet teeth or with the dwell plates 69 and 70, so that for every upward movement of the levers 29 and 30 the ratchet wheels and pattern drums will be intermittently moved to the extent of one ratchet tooth except when the plates 69 and 70 pass underneath the pawls at which time the movement of the levers 29 and 30 will not move the pattern drums.

Fashioning screws 73 and 74 of the usual construction employed in straight knitting machines, are mounted adjacent opposite ends of the machine and are automatically operated at predetermined periods, by the usual mechanism, for moving the carrier rod stops 75, 75ª, 75ᵇ, 76, 76ª and 76ᵇ toward or from the adjacent ends of the respective carrier rods. As they are shown on the drawing; the stops 75 and 76 are adapted to arrest the movement of the carrier bar 40 in opposite directions; the stop 76ª is adapted to arrest the movement of the bar 41 and the stop 75ᵇ is adapted to arrest the movement of the bar 42; the stops 76ª and 75ᵇ only acting when the machine is knitting the heel portion as will be more fully described hereinafter. As shown in Fig. 6, the standard 77 which supports the stops 75, 75ª and 75ᵇ, and the standard 78 which supports the stops 76, 76ª and 76ᵇ are each slotted so that the stops 75ª, 75ᵇ, 76ª and 76ᵇ may be moved out of the way of the carrier rods 41 and 42 to permit the latter being slid through the slots. By this means the respective thread carriers are kept out of the boundary lines of the needle banks when the machine is knitting the plain or leg portion of the stocking and do not interfere with the movement of the thread carriers 43 during the knitting of the said plain leg portions.

In order to produce stocking legs having reinforced heel portions as shown in Fig. 8 the pattern drums are mounted on the shaft as clearly shown in Figs. 1 and 3 so that the free ends of the pattern pins on the drum 19 extend toward the stop support 77 and the free ends of the pins on the drum 20 extend toward the stop support 78. The abutment pins on the friction boxes 47 and 48 are so disposed as to contact with the ends of the pattern pins on respective pattern drums so that as the friction shaft moves the friction boxes 47 and 48 in one direction, the pin 58 on the friction box 48 will abut the end of a pattern pin on the drum 19, while the abutment pin 57 on the friction box 47 will move away from the ends of its coöperating pattern pin on the drum 20. On the opposite movement of the friction shaft however, the abutment pin 57 on the friction box 47 will move into contact with a pin of its pattern drum while the abutment pin 58 on the friction box 48 will move away from its cooperating pin on the pattern drum 19.

For purposes of producing a leg section as shown in Figs. 9 and 11 where the same is provided with a reinforced selvaged edge which continues from the top of the stocking throughout the entire length and merges

into the reinforced heel portions in a manner as before stated, I provide an auxiliary means for rotating the drums 19 and 20 so that the reinforced selvaged edge may also be produced during the fashioning of the leg.

When the fashioning is taking place it is desirable that the reinforcing yarn adjacent the edges of the fabric shall follow the angle of the fashioned edge as shown in Fig. 13. To accomplish this end I throw the pawls 31 and 32 out of action and rotate the drums by ratchet hooks 79 respectively mounted on arms 80 so as to actuate the ratchets 25 and 26 of said drums once for each revolution of the cam shaft 3. Each arm 80 is pivotally connected by a rod 81 to the end 82 of a double-ended lever 83 pivotally supported to the frame 1 at 84.

In order to limit reinforced selvage edges as shown in Fig. 13, the pins on the pattern drums are placed so that those which control the reinforcing yarn at the fashioned portions have a step formation, that is, they are arranged in a series of sets of which those of each set are all of the same length but different in length from those of the other sets. This particular arrangement of pins will result in the production of the same number of courses of reinforcing yarn as there are pins in a set before there is a change in the amount of inward movement of the reinforcing yarn carriage and will produce neat and durable selvage edges at the fashioned portions of the stocking. It will be understood however that other arrangements or movements of the pattern pins may be employed to produce different forms of reinforced selvage edges without departing from my invention.

When the machine is not operating to form the fashioning, an antifriction wheel 85 on the end 86 of the double-ended lever 83 is held in contact with a disk 87 on the cam shaft 3 by a tension spring 88 having one end attached to an extension 89 of the frame 1 of the machine, and the other end attached to the end 82 of the lever, so that a rotation of the shaft 3 will not impart movement to the hook 79. As the cam shaft 3 receives a slidable or longitudinal movement from the automatically controlled mechanism 90, of any well known type, in order to form the fashioning of the leg portion in the usual manner, I provide a cam 91 which, when the said shaft 3 is longitudinally moved will slide under and come in contact with the anti-friction wheel 85 (see Figs. 1 and 2). As the shaft 3 is rotated a reciprocating movement will be imparted to the arm 80 and the ratchet hooks 79 will rack with the ratchet 25 thereby moving the drum 19 during the time when a fashioning is taking place for the reason that the said longitudinal movement of the shaft 3 also slides cams 92 and 93 into a path with antifriction wheels 94 and 95 respectively. Well known ratchet mechanism 96 and 97 actuates the fashioning screws 73 and 74 to move the carrier-rod stop supports 75 and 76 toward each other. When the fashioning, as just stated is completed, the shaft 3 will be automatically moved in the opposite direction and the cams 92 and 93 will be moved away from their respective antifriction wheels 85, 94 and 95, thereby stopping the movement of the hook 79 and fashioning screws 73 and 74.

As the mechanism for effecting the knitting forms no part of my invention I have not illustrated or described the same in detail but have shown it in a general way on the drawing which will enable any one to follow out the purpose and construction of said invention.

When the machine is in a position to begin the knitting of stocking legs as shown in Fig. 8, each reinforcing thread carrier 44 and 45 is in a position outside the boundary of its respective needle bank (see Fig. 3 in dot-and-dash lines); the stops 76[a] and 75[b] having been moved out of the way to allow the carrier rods 41 and 42 to project through respective slots in the standards 78 and 77 (see Fig. 6). Also, the friction-box slides 50 and 51 are withdrawn from their respective forks on the carrier rods 41 and 42, and each main thread carrier 43 is adjacent one end of its respective bank of needles; the friction-box slide 49 being in engagement with the fork on the carrier rod 40. Also, when the stockings are being started the thread carriers 43[a] on carrier rods 42[a] are also out of action so as not to interfere with the main thread carriers 43 and the end of the bar 42[a] projects through a slot in the stop support 77.

The operation is as follows: Motion is imparted to the cam 9 through the medium of the main power shaft 2, gears 6 and 7, and Coulier shaft 8, and the said movement of the cam causes a reciprocating movement to be transmitted to the cock-box bar 14. As the friction shaft 16 and cams 33 and 34 are attached to the cock-box bar 14 they receive a reciprocating motion similar thereto. The movement of the friction shaft imparts motion to the carrier rod 40 through the medium of the friction box 46 and the thread carriers 43 are thereby reciprocated and feed yarn to all the needles. The limit of movement of the thread carriers 43 is determined by the distance between the carrier rod stops 75 and 76, as the rod 40 is so adapted as to strike each of the said carrier stops in its reciprocating movement. As the movement of the friction shaft is greater than the distance of travel of the carrier rod 40 as determined by the said stops 75 and 76 the friction box will move the said rod

40 until the latter strikes a stop 75 or 76 and then the friction shaft slides through the friction box 46 the difference in the amount of travel of the rod and the friction shaft; this same being true in both directions of the movement of the friction shaft and being rendered necessary as will be hereinafter described during the narrowing of the main web and when the stops 75 are brought closer together. After each thread carrier 43 has fed a length of yarn to the needles of its respective bank the usual knitting operation takes place to form the thread into loops. This operation of the thread carriers 43 takes place throughout the full width of the web which is knitted from points X—X to X—Y as clearly shown in the drawing in Figs. 3 and 8. During the knitting of this portion of the webs the selvage or garter top of the stocking is produced by transferring the first course of loops on to a subsequent course in the usual manner.

The machine illustrated in the drawing is provided with a well known mechanism for gradually moving the stop supporting standards 77 and 78 toward each other as above mentioned and after the stocking webs have been knitted to the point Y—Y. This moving together of the stop supporting standards 77 and 78 with the stops 75, 75ª, 75ᵇ, 76, 76ª and 76ᵇ causes the stops 75 and 76 to gradually decrease the limit of movement of the carrier rod 40 and as the thread carriers 43 receive a movement equal to the movement of the carrier rod 40 they will feed yarn to a less number of needles for each movement of said rod in each direction. Therefore, as there are a smaller number of needles knitting for each reciprocation of the rod 40 the fabric will gradually be narrowed from each edge until the movement of the stops 75 and 76 toward each other is stopped by any well known mechanism (one form of which is shown in Fig. 3 and acts to automatically move the cam shaft 3); such a narrowing of the fabric being shown in Figs. 3 and 8 from Y—Y to Z—Z. This narrowing or fashioning is well known in the art and is caused to produce a smaller diameter of the stocking leg, when seamed, so as to provide for the difference of diameter between the calf and the ankle portions thereof. After the said movement of the carrier rod stops has discontinued, the thread guides 43 will continue to feed threads to a number of needles equal to the width of the fabric at this point or the movement of the said carrier rod 40 at this point until the fabrics have been knitted to Z', Z'.

After the fabrics have been knitted to the points Z', Z' the slide 50 is moved into engagement with the fork 41ª on the carrier rod 41 and the slide 51 is brought into engagement with the fork 42ª on the carrier rod 42. Also the pawls 31 and 32 are placed in mesh with the ratchets 25 and 26 and the drums 19 and 20 are so arranged that the longest pins 55 and 56 thereon are in alinement with respective abutment pins 58 and 57. After the carrier rods 41 and 42 have been moved so that their respective forks 41ª and 42ª are engaged by the slides 50 and 51 the stops 75ª and 75ª are raised into position to be abutted by the ends of the said rods 41 and 42. Also, the positioning of the several parts is such that a thread carrier 44 and a thread carrier 45 will be adjacent respective edges 98 and 99 of the fabric at the points Z', Z'. A continued movement of the machine will then cause the cams 33 and 34 to raise the rollers 35 and 36 and through the medium of the levers 29 and 30 cause the pawls 31 and 32 to rack the ratchet wheels on the respective drums 19 and 20. At the same time the slides 49, 50 and 51 will impart motion to the respective thread carriers 43, 44 and 45 on the bars 40, 41 and 42 through the medium of the friction boxes 46, 47 and 48 on the friction shaft 16. Therefore, as the bar 40 is allowed to move the full movement as prescribed by the distance between the stops 75 and 76 the thread carriers 43 will continue to serve yarn to all the needles, which have previously been working during the knitting of the fabric from the points Z, Z to the points Z', Z' and thereby continue to knit a fabric of similar width. However, the thread carriers 44 and 45, during their movements inwardly from the edges of the fabrics due to the reciprocation of the friction shaft will be prevented from feeding yarn for the full width of the fabric at this point by the abutment pins 58 and 57 coming in contact with the said long pins 55 and 56, as the movement of the thread carriers 44 and 45 is dependent upon the movement of the friction boxes 48 and 47 and the abutment pins 58 and 57. The number of needles that the said thread carriers will serve with yarn will be in proportion to the distance between the abutment pins and the pins on the drums 19 and 20. As shown in the drawings the distance between the longest pins on either of the drums and the corresponding abutment pin is such as to allow for the feeding of about two needles for the first course in either direction and from opposite edges of the fabrics being knitted. As the pawls 31 and 32 operate for each second movement of the cock-box bar 14, shorter pins 55 and 56 will be brought into alinement therewith so that each thread carrier 44 and 45 will serve yarn to an increased number of needles for each reciprocation of the friction shaft 16. It will thus be seen that the splicing or reinforced courses formed by the said yarn

carriers 44 and 45 starting at opposite edges and increasing in length will form a reinforcement in which the inner line of intersection of the reinforced courses with the single thickness fabric will form an angle 100 to the edges 98 and 99 of each fabric.

When the fabric has been knitted to the points X', X', the respective dwell plates 69 and 70 on the drums 19 and 20 will move the pawls 81 and 82 out of rank with the ratchet wheels 25 and 26 and thereby stop the movement of the said drums. When the pattern pins 55 and 56 are in alinement with their respective abutment pins 58 and 57, the slide 51 is operated to engage both the forks 49' and 42' on the respective carrier rods 43 and 42' and the slide 50 is moved to engage both the forks 49' and 41' on the bars 50 and 41. A continued operation of the machine will then knit the heel flaps 101 and 102, the abutment pins 56 and 57 continuing to strike the low pins on the pattern drums 19 and 20. By coupling the forks as just described, the thread guides 43 and 44 will operate in unison to serve their threads for knitting one of the heel flaps while the thread guides 45 and 42' will move in unison to serve their threads to the needles to produce the other heel flap. It is thus obvious that the flaps 101 and 102 when made as described will each consist of a plurality of interknitted threads.

When it is desired to knit a stocking leg having reinforced selvage edges as shown in Figs. 9 and 11 the pawls 81 and 82 are raised out of engagement with respective ratchet wheels 25 and 26 and the drums are turned so that a pin of proper length is brought into alinement with the respective abutment pins 56 and 57 to form a reinforced selvage of the proper width throughout the length of the fabric from X', X' to Y', Y', the hooked pawls 79 being brought into engagement with the respective ratchet wheels on the drums 19 and 20; as shown in Fig. 9 in dot-and-dash lines. Then as the fashioning starts, due to the said longitudinal movement of the shaft 8, the hooks 79 will tend to rotate the drum so as to provide for the reinforcing at the narrowing of the fabric between the point Y', Y' to Y², Y². The fashioning mechanism is then thrown out of engagement and there is a straight selvage knitted up to the points Y², Y² after which the pawls 81 and 82 are again allowed to engage their respective ratchets and form a heel gusset in the manner as before stated and which merges from the said selvage. The heel flaps may be then knitted in the well known manner.

All machines of this type are made including the friction shaft and carrier rods very little change is required in providing the same with my invention.

In Figs. 13 and 14 I have shown two other forms of heel reinforcements which can be produced with my invention. In Fig. 14 while some of the lines of intersection run substantially at right angles to the courses, the "step" effect produces the gradual angle other than 90° to the courses.

I claim:

1. A machine for knitting full fashioned stocking webs with selvage edges, including a series of needles, means for supplying [illegible] web; means for supplying reinforcing yarn to those needles which knit the selvage edges and the portions of the web adjacent thereto to form a heel reinforcement; and means for rendering said latter yarn-supplying means operative to feed the reinforcing yarn to varying numbers of needles inwardly from the edge-producing needles during the knitting of successive courses to cause the inner ends of the courses of the heel reinforcement to define a line inclined to the wales and courses.

2. A machine for knitting full fashioned stocking webs with selvage edges, including a series of needles; a main yarn guide; means for moving said guide to supply yarn to the needles; a plurality of guides for supplying reinforcing yarn to the needles which knit the selvage edges and the portions of the web adjacent thereto near the ankle to form a heel reinforcement; and means for moving the reinforcing yarn guides different distances inwardly from the edge-producing needles in successive courses to cause the inner ends of the courses of the heel reinforcement to define a line inclined to the wales and courses.

3. A machine for knitting full fashioned stocking webs with selvage edges, including a series of needles; a main yarn guide; means for moving said guide to supply yarn to the needles; two guides for supplying reinforcing yarn to those of said needles which knit the selvage edges and portions adjacent thereto near the ankle to form a heel reinforcement; means for reciprocating the reinforcing yarn guides to also supply the reinforcing yarn to said latter needles; and means for stopping the reinforcing yarn guides at different points in successive courses to cause the inner ends of the courses of the heel reinforcement to define a line inclined to the wales and courses.

4. A machine for knitting full fashioned stocking webs with selvage edges, including a series of needles; a main yarn guide; means for moving said guide to supply yarn to the needles; two guides for supplying reinforcing yarn to those of said needles which knit the selvage edges and portions adjacent thereto near the ankle to form a heel reinforcement; means for reciprocating the reinforcing yarn guides to also supply the reinforcing yarn to said latter needles; and

means for stopping the reinforcing yarn guides at points gradually increasing in distance inwardly from the selvage edges in successive courses to cause the inner ends of the courses of the heel reinforcement to define a line inclined to the wales and courses.

5. A machine for knitting full fashioned stocking webs with selvage edges, including a series of needles; a main yarn guide; means for moving said guide to supply yarn to the needles; two guides for supplying reinforcing yarn to those of said needles which knit the selvage edges and portions adjacent thereto near the ankle to form a heel reinforcement; means for reciprocating the reinforcing yarn guides to also supply the reinforcing yarn to said latter needles; and automatically operated graduated stops for arresting the reinforcing yarn guides on their inward movements to cause the inner ends of the courses of the heel reinforcement to define a line inclined to the wales and courses.

6. The combination in a full fashion knitting machine of a series of needles; a main carrier rod; a yarn guide thereon; means for moving said carrier rod to actuate the main yarn guide and thereby serve yarn to the needles; a second carrier rod; a yarn guide thereon; a third carrier rod; a yarn guide on the third carrier rod; a friction shaft; means for moving the friction shaft; a pattern shaft; two pattern drums on said pattern shaft, each having pins of varying lengths; a friction box on said friction shaft having a member placed to engage the second carrier rod and a portion positioned to strike the pins of one of the pattern drums; a second friction box on said friction shaft having a portion positioned to engage the third carrier rod and a portion placed to strike the pins of the second pattern drum; means timed with the fashioning mechanism for actuating the pattern drums to move pins of different lengths into line with the contacting portions of the friction boxes; with a second and independent means for actuating the pattern drums.

7. The combination in a knitting machine of a series of needles; a main yarn guide; a carrier therefor; means for moving said carrier; a reinforcing yarn guide; a carrier therefor; a cockbox bar; a friction shaft secured to said bar; means for actuating said bar; a pattern drum; a ratchet on said drum; a friction box on said friction shaft having a portion positioned to engage said second carrier and another portion placed to strike said pattern drum; a pawl for engagement with the ratchet; and means actuated by the movement of the cockbox bar for moving said pawl and thereby actuating the drum to bring different portions thereof into line with the contacting portions of said friction box.

8. The combination in a knitting machine of a series of needles; a main carrier rod; a yarn guide secured to said rod; means for moving the rod; a second carrier rod; a yarn guide secured thereto; a third carrier rod; a yarn guide secured to said third rod; a cock-box bar; a friction shaft secured thereto; means for moving the cock-box bar; a pattern shaft; a pattern drum on said shaft; a ratchet on said pattern drum; a series of pins of varying lengths secured in said drum; a second pattern drum on said pattern shaft; a ratchet on the latter drum; a series of pins of varying lengths secured to said drum; a friction box on the friction shaft having a portion adapted to engage the second carrier rod and another portion adapted to strike the pins on the first pattern drum; a second friction box on the friction shaft having a portion placed to engage the third carrier rod and having a second portion adapted to coöperate with the pins on the second pattern drum; pawls for engagement with the ratchet wheels; and means actuated by the movement of the cock-box bar to effect the movement of the said pawls to move the drums and thereby bring pins of different lengths into alinement with the contacting portions of the friction boxes.

9. The combination in a knitting machine of a series of needles; a main carrier rod; a yarn guide secured to said rod; means for moving the rod; a second carrier rod; a yarn guide secured thereto; a third carrier rod; a yarn guide secured to the same; a cock-box bar; a friction shaft secured thereto; means for moving the cock-box bar; a pattern shaft; a pattern drum on said shaft; a ratchet on said drum; a series of pins of varying lengths secured in the drum; a second pattern drum on said pattern shaft; a ratchet on the latter drum; a series of pins of varying lengths secured to the second pattern drum; a friction box on said friction shaft having a portion adapted to engage the second carrier rod and a portion adapted to strike the pins on the first pattern drum; a second friction box on the friction shaft having a portion placed to engage the third carrier rod and having another portion adapted to strike the pins on the second pattern drum; pawls for engagement with the ratchet wheels; cams mounted on the cock-box bar in position to actuate said pawls and move the pattern drums to bring pins of different lengths into alinement with the contacting portions of the friction boxes; and means for automatically disengaging said pawls from their respective ratchets.

10. The combination in a knitting machine of a series of needles; a main carrier rod; a yarn guide secured to said rod; means for moving the rod; a second carrier rod; yarn guide secured thereto; a cock-box bar;

530
C
8

a friction shaft secured to said cock-box bar; means for moving the cock-box bar; a pattern shaft; a pattern drum thereon; a ratchet on said drum; a series of pins of varying lengths secured in the drum; a second pattern drum on said pattern shaft; a ratchet on said second drum; a series of pins of varying lengths secured to the second pattern drum; a friction box on the friction shaft having a portion adapted to engage the second carrier rod and a portion adapted to strike the pins on the first pattern drum; a second friction box on the friction shaft having a portion capable of engaging the third carrier rod and having a portion placed to engage the pins on the second pattern drum; pawls placed to respectively engage said ratchet wheels; cams mounted on the cock-box bar and operating to effect movement of the said pawls to more respective pattern drums and thereby bring pins of different lengths into alinement with the contacting portions of the friction boxes; means for automatically disengaging said pawls from their respective ratchets; two other pawls placed to respectively engage said ratchets; and means, independent of the cock-box bar, for moving said latter pawls to cause the said drums to bring pins of different lengths into alinement with the contacting portions of the friction boxes.

11. The combination in a knitting machine of a series of needles; a main carrier rod; a yarn guide secured to said rod; means for moving the rod; a second carrier rod; a yarn guide secured thereto; a cock-box bar; a friction shaft secured to said cock-box bar; means for moving the cock-box bar; a pattern shaft; a pattern drum on said shaft; a ratchet on said drum; a series of pins of varying lengths secured in said drum; a second pattern drum on the pattern shaft; a ratchet on said second drum; a series of pins of varying lengths secured to the second pattern drum; a friction box on the friction shaft having a portion placed to engage the second carrier rod and a portion positioned to strike the pins on the first pattern drum; a second friction box on the friction shaft having a portion capable of engaging the third carrier rod and having a second portion adapted to engage the pins on the second pattern drum; pawls placed to respectively engage the ratchet wheels; cams mounted on the cock-box bar and operating to effect movement of the pawls and drums to bring pins of different lengths into alinement with the contacting portions of the friction boxes; means for automatically disengaging said pawls from their respective ratchets; two other pawls placed to respectively engage the ratchets; means independent of the movement of the cock-box bar for moving said latter pawls to cause the drums to bring pins of different lengths into alinement with the contacting portions of the friction boxes; and means for adjusting said latter portions of the friction boxes to compensate for wear.

12. The combination in a knitting machine of a series of needles; a main carrier rod; a yarn guide secured to said rod; means for moving the rod; a second carrier rod; a yarn guide secured thereto; a third carrier rod; a yarn guide secured to said third carrier rod; a cock-box bar; a friction shaft secured thereto; means for moving the cock-box bar; a pattern shaft; a pattern drum on said shaft; a ratchet on said drum; a series of pins of varying lengths secured in said drum; a second pattern drum on said pattern shaft; a ratchet on said second drum; a series of pins of varying lengths secured to the second pattern drum; a friction box on the friction shaft having a portion adapted to engage the second carrier rod and a portion adapted to strike the pins on the first pattern drum; a second friction box on the friction shaft having a portion capable of engaging the third carrier rod and having a second portion adapted to engage the pins on the second pattern drum; pawls placed to respectively engage the ratchet wheels; cams mounted on the cock-box bar and respectively operative to effect movement of said pawls and pattern drums to bring pins of different lengths into alinement with the contacting portions of the friction boxes; means for automatically disengaging said pawls from their respective ratchets; two other pawls mounted to respectively engage the ratchets; a fashioning shaft; and means actuated by said shaft for effecting movement of the said latter pawls to move the said drums to bring pins of different lengths into contacting alinement with the said contacting portions of the friction boxes.

In testimony whereof, I have signed my name to this specification, in the presence of two subscribing witnesses.

GUSTAV A. LANDENBERGER.

Witnesses:

CLYDE T. MOYER,

WM. A. BARR.

532

T. LIEBERKNECHT.

STRAIGHT HOSIERY FRAME.

APPLICATION FILED MAY 25, 1910.

981,663.

Patented Jan. 17, 1911.

5 SHEETS—SHEET 1.

Fig. 1

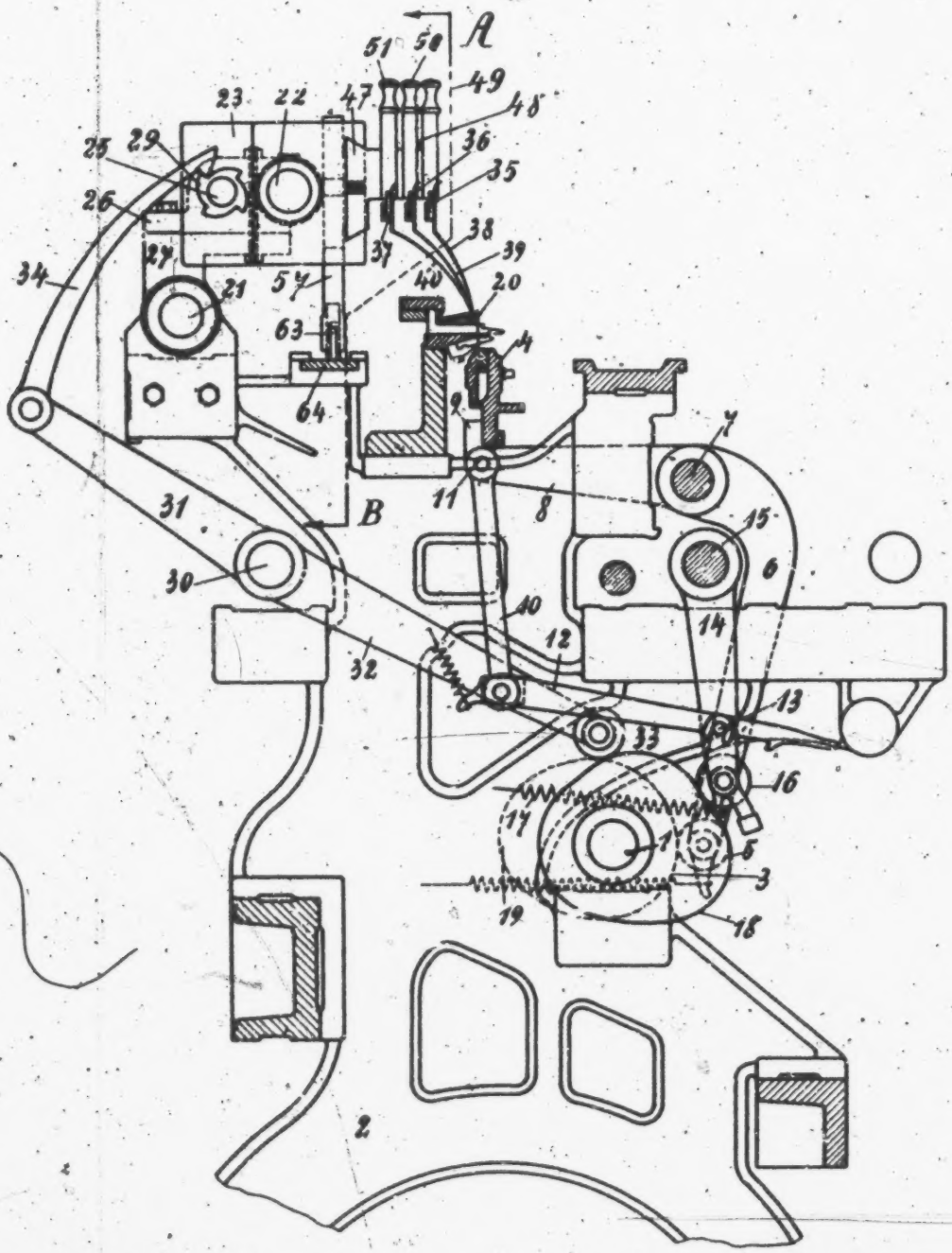

Witnesses:
M. C. Bender
Lou S. Hankinson

Inventor:
Theodor Lieberknecht
by Foster Freeman Watson & Coit
Attys

533

T. LIEBERKNECHT.

STRAIGHT HOSIERY FRAME.

APPLICATION FILED MAY 26, 1910.

981,663. Patented Jan. 17, 1911.

5 SHEETS—SHEET 2.

Fig. 2

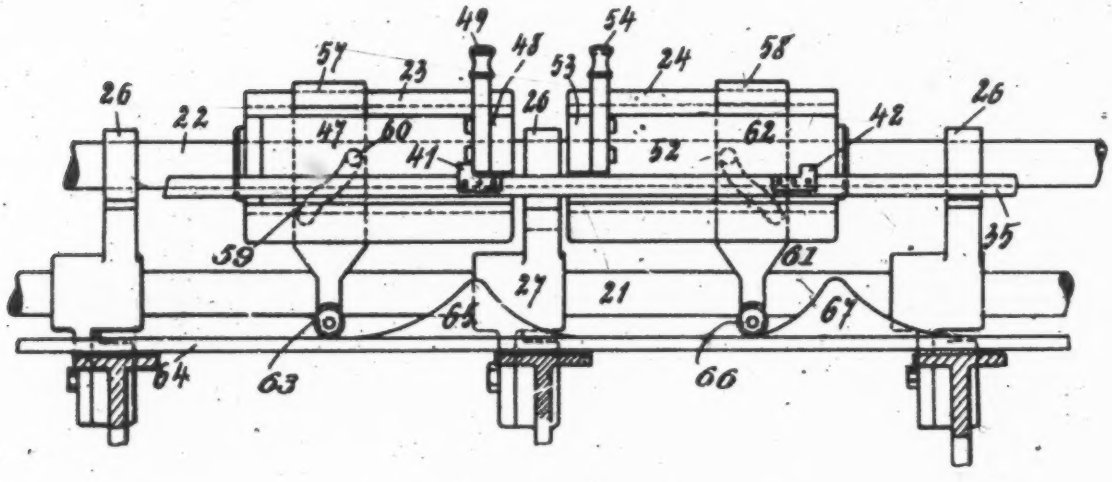

Fig. 3

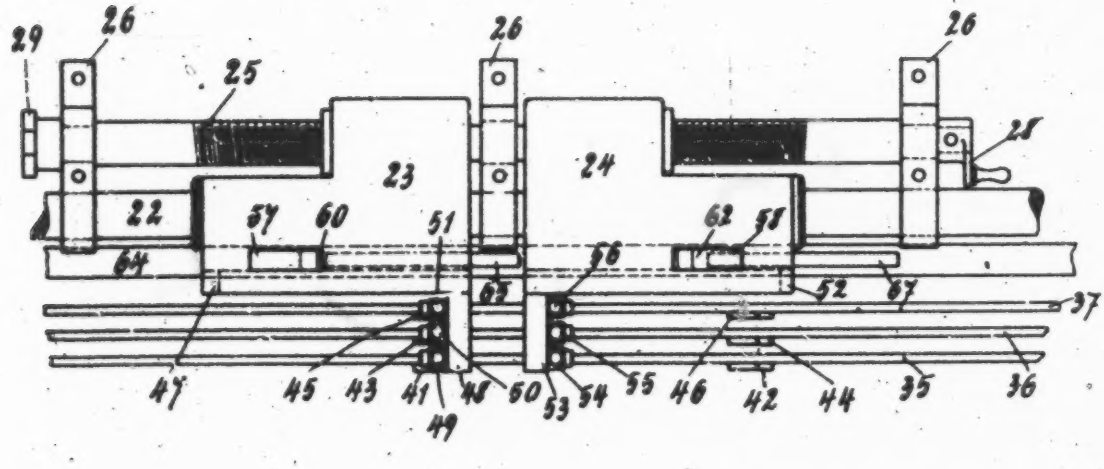

Witnesses:
W. O. Bender
Lew Hockinson

Inventor:
Theodor Lieberknecht
by Foster Freeman Watson & Coit
Attys

534

T. LIEBERKNECHT.

STRAIGHT HOSIERY FRAME.

APPLICATION FILED MAY 25, 1910.

981,663.

Patented Jan. 17, 1911.

5 SHEETS-SHEET 3.

Fig. 4

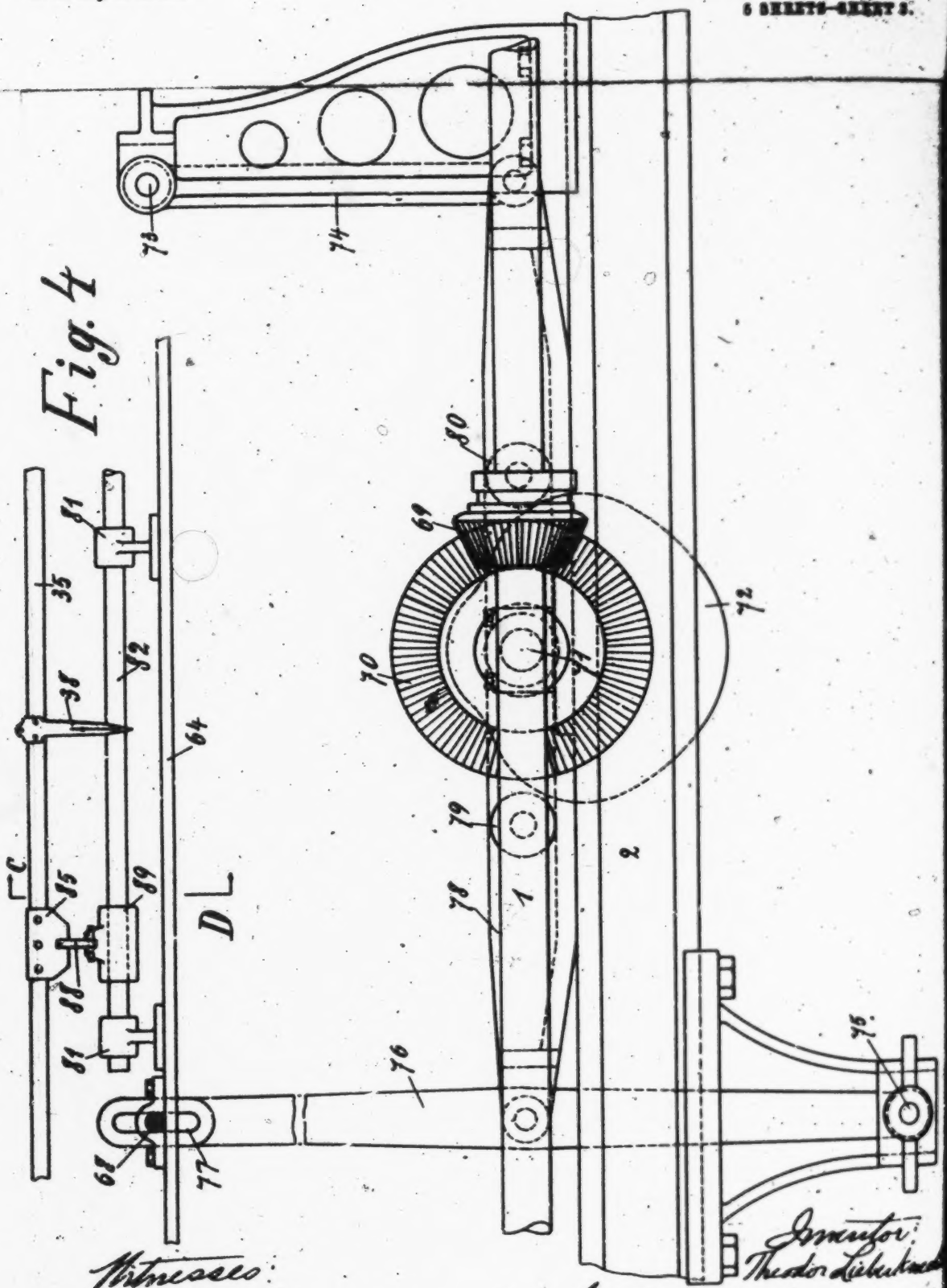

Witnesses:
M. C. Bender
Lew Hochheimer

Inventor:
Theodor Lieberknecht
by Foster Freeman Watson & Coit
Attys.

535

T. LIEBERKNECHT.

STRAIGHT HOSIERY FRAME.

APPLICATION FILED MAY 26, 1910.

981,663.

Patented Jan. 17, 1911.

5 SHEETS—SHEET 4.

Fig. 5

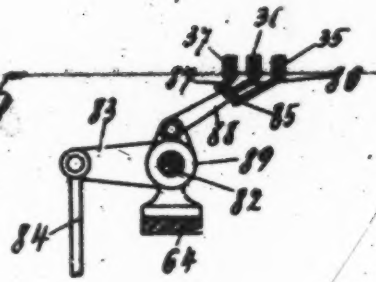

Fig. 6

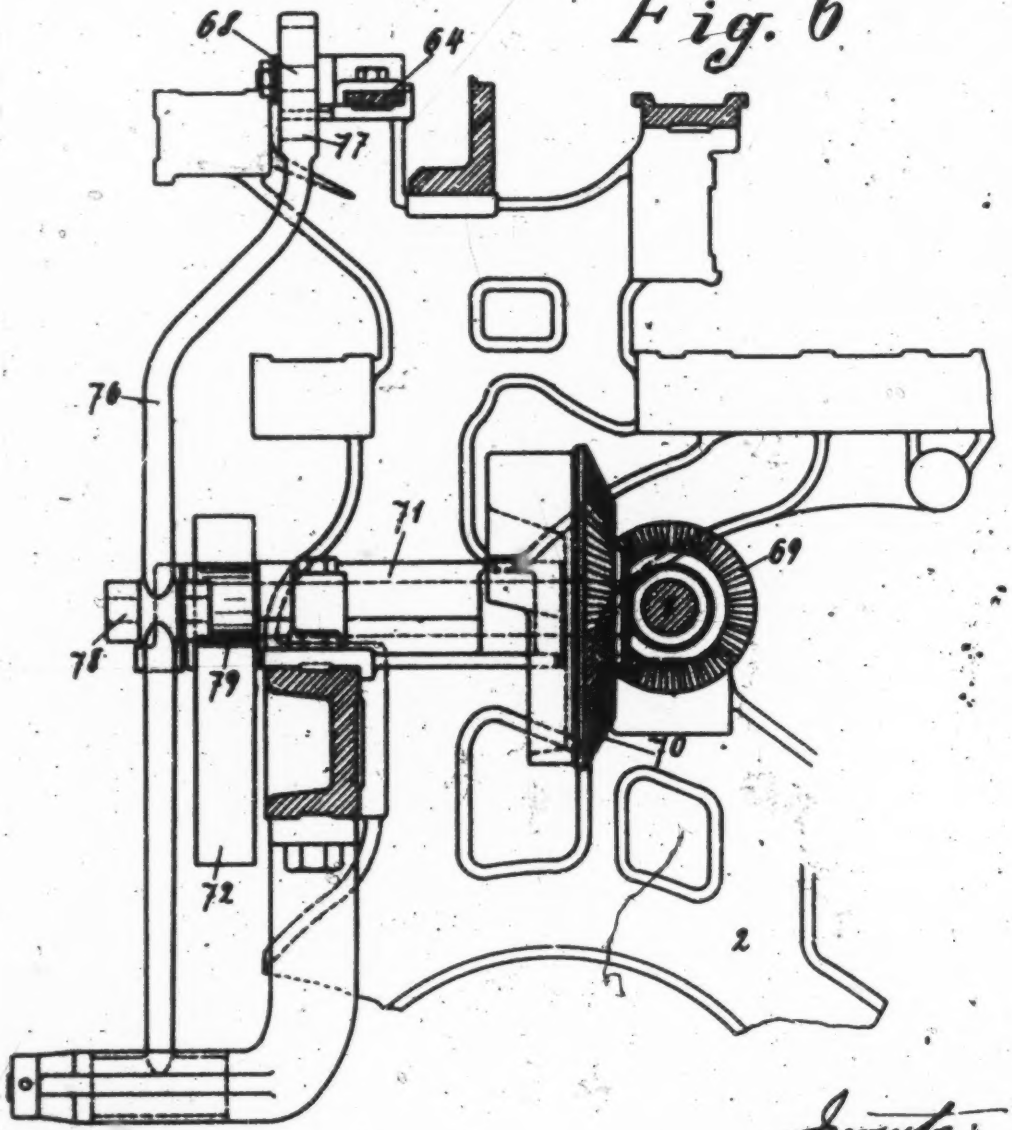

Witnesses:
W. C. Bender
Leo F. Hankinson

Inventor:
Theodor Lieberknecht
by Foster Freeman Watson Coit
Attys

536

T. LIEBERKNECHT.

STRAIGHT HOSIERY FRAME.

APPLICATION FILED MAY 26, 1910.

981,663. Patented Jan. 17, 1911.

5 SHEETS—SHEET 5.

Fig. 7

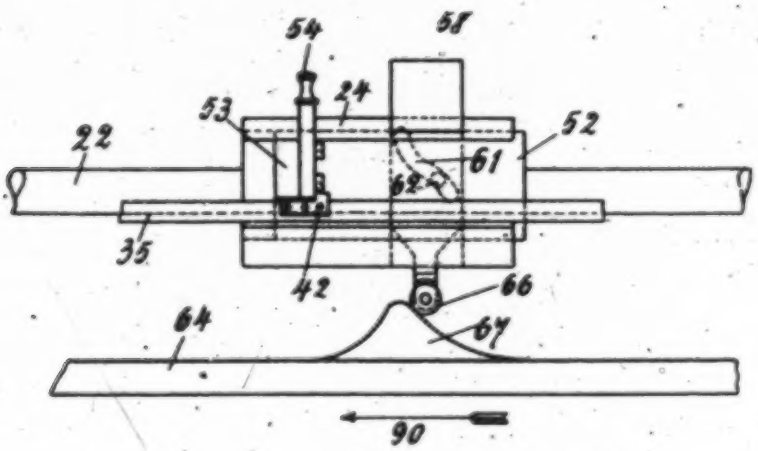

Fig. 8

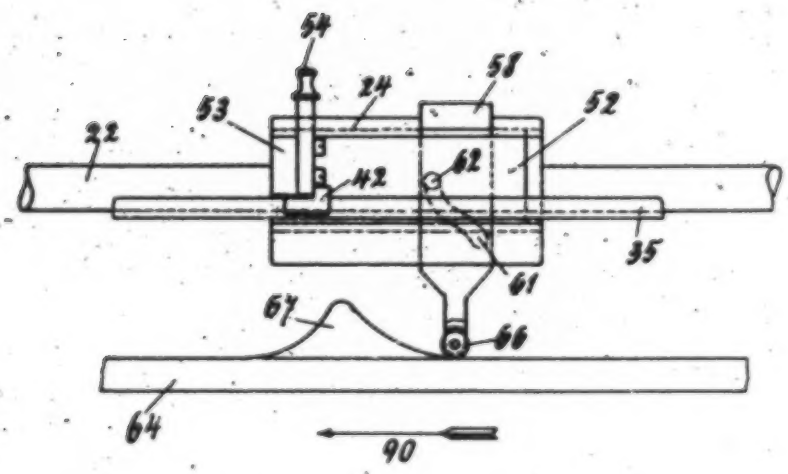

Witnesses:
M. C. Bender
Lou Hankinson

Inventor:
Theodor Lieberknecht
by Foster Freeman Watson & Coit
Attys

UNITED STATES PATENT OFFICE.

THEODOR LIEBERKNECHT, OF HOHENSTEIN-ERNSTTHAL, GERMANY.

STRAIGHT HOSIERY-FRAME.

981,663. Specification of Letters Patent. Patented Jan. 17, 1911.

Application filed May 25, 1910. Serial No. 563,288.

To all whom it may concern:

Be it known that I, THEODOR LIEBERKNECHT, a citizen of the Empire of Germany, residing at Hohenstein-Ernstthal i. S., in the Empire of Germany, have invented a new and useful Straight Hosiery-Frame, of which the following is a specification.

My invention relates to improvements in straight hosiery frames adapted to simultaneously produce a number of like hosiery pieces, whereby the shocks or blows produced by the yarn guide bars striking the known shiftable stops are considerably softened or nearly annihilated, so that the machines can be driven at a greater speed than hitherto and consequently their output will be increased. I provide the straight hosiery frame with two main slides guided in the frame proper and operated by a screw-spindle with right- and left-handed threads. Each main slide is provided with a subsidiary slide guided in it parallel to the yarn guide bars. On each subsidiary slide as many adjustable stops are provided, as there are yarn guide bars, each stop being adapted to come in contact with one lug on any of the yarn guide bars and to move with same while retarding it, until both stop. In each main guide moreover a controlling slide is guided in a direction at right angles to the yarn guide bars and the controlling slide is provided with a crooked slot, in which a pin on the subsidiary slide engages. I further provide the machine with a cam bar parallel to the yarn guide bars, which cam bar is guided in the frame proper and has two cams, over which rollers at the lower ends of the two controlling slides can roll, so that by the cams the controlling slides can be alternately raised and lowered, while at the same time by the controlling slides the subsidiary slides are longitudinally moved in one and the other direction.

Means are provided for longitudinally reciprocating the cam bar and for periodically and yieldingly connecting the cam bar with any of the yarn guide bars. The said crooked slots in the two controlling slides and the said two cams are so shaped, that shortly before the end of any stroke of the yarn guide bar then in motion the respective subsidiary slide is first moved through a certain distance in a direction opposite to that of the yarn guide bar and the motion of the subsidiary slide is then reversed at the moment that its respective stop is about to come in contact with the corresponding lug of the yarn guide bar, so that the shock or blow produced by the lug striking the stop is considerably softened or annihilated, the more so, since by the stop moving with the subsidiary slide in the same direction the motion of the lug and of its bar is gradually retarded, until both stop at the moment that the motion of the yarn guide bar is reversed. The said screw-spindle with right- and left-handed threads serves for feeding the two main slides in opposite directions during the widening or narrowing of the goods, in other words for varying the stroke of the yarn guide bar.

I will now proceed to describe my invention with reference to the accompanying drawings, in which—

Figure 1 is a vertical central cross section through a Cotton type straight hosiery frame provided with the improvements according to my invention, only so much of the machine being shown as is necessary for giving a sufficient idea. Fig. 2 is a vertical longitudinal section through the broken line A—B in Fig. 1 and shows the middle part of the machine. Fig. 3 is a plan view of the parts shown at Fig. 2. Fig. 4 is a front elevation of the parts in the middle portion of the frame. Fig. 5 is a vertical cross section through the line C—D in Fig. 4, seen in the direction of the arrows. Fig. 6 is a vertical cross section through the straight hosiery frame on a line to the left of the parts shown in Fig. 4, only those portions of the mechanism required to illustrate the invention being shown. Fig. 7 is a detail view of some of the parts shown in Fig. 2, with the cam bar in another position, and Fig. 8 is a similar view and shows the cam bar in a third position.

Similar characters of reference refer to similar parts throughout the several views.

In the drawings I have shown for example a straight hosiery frame of the known Cotton's construction, which is adapted to simultaneously produce a number of like goods. A cam shaft 1 is mounted in the frame 2 to turn and is arranged to be driven from some countershaft by means of gearing (not shown) and carries various cam disks, of which only a few are shown at Fig. 1. The cam disks 3 are adapted to operate the machine needle bar 4 by means of rollers 5, arms 6, a rocking shaft 7 and arms 8.

The frame needle bar 4 is fastened on the upper short arms 9 of two-armed levers 9, 10, which are mounted to a rock on pins 11 at the free ends of the arms 8, while their lower long arms 10 are pivotally connected by rods 12 with pins 13 on arms 14 fastened on a rocking shaft 15. The arms 14 carry rollers 16 and are therewith pressed by helical springs 17 against the periphery of cam disks 18 on the cam shaft 1, while the above mentioned rollers 5 are pressed by helical springs 19 against their cam disks 3. In this manner the frame needle bar 4 can be raised and lowered by the parts 3, 5, 6, 7, 8 and rocked about the pins 11 as usual.

The frame needles are denoted by 20, but I do not further describe them, nor the sinkers working them, as they are immaterial to my invention.

Two parallel horizontal rods 21 and 22 are provided in the frame 2 and two opposite main slides 23 and 24 are mounted on the upper rod 22 to longitudinally move. The two main slides 23 and 24 form nuts of a horizontal left- and right-handed screw-spindle 25, which is mounted to turn in three bearings 26, 26 loose on the rod 22. The bearings 26, 26 are rigidly connected with three supports 27, 27, which are loose on the lower rod 21. The middle bearing 26 is assumed to be located in the middle of the hosiery frame, and it will be seen, that by the three bearings 26, 26 and the three supports 27, 27 the two main slides 23 and 24 are prevented from turning on the rod 22. The screw-spindle 25 carries at the right end in Fig. 3 a hand-crank 28 and at the left end a ratchet wheel 29 with four teeth. Loose on a shaft 30 forming part of the hosiery frame is a two-armed lever 31, 32, of which the upper arm 31 carries a long pawl 34 engaging the ratchet wheel 29 and the lower arm 32 carries a roller 33 adapted to roll on one of the cam disks 3. It will be understood, that by means of the pawl 34, the ratchet wheel 29 and the screw-spindle 25 the two main slides 23 and 24 can be fed toward one another to control the traverse of the yarn guides when narrowing the goods and after finishing the goods or their portions the two main slides can be returned to their initial position by turning the hand-crank 28. Three yarn guide bars 35, 36, 37 parallel to the two rods 21 and 22 and to the series of frame needles 20 are shown to be provided, which are mounted in the frame 2 to longitudinally reciprocate and carry yarn guides 38, 39, 40 (Fig. 1), of which only one 38 is shown in Fig. 4. The yarn guide bars 35, 36, 37 have fastened on them near their middle two lugs each, viz. 41 and 42 on the bar 35, 43 and 44 on the bar 36, 45 and 46 on the bar 37. A subsidiary slide 47 is horizontally guided in one main slide 23 and has an arm 48, on which three vertically adjustable stops 49, 50, 51 are shown to be provided about in the vertical planes of the three yarn guide bars 35, 36, 37. Another subsidiary slide 52 opposite to the first one 47 is guided in the other main slide 24 and has an arm 53, on which three vertically adjustable stops 54, 55, 56 are provided. The lug 41 of the yarn guide bar 35 is adapted to come in contact with the stop 54, whereby the bar is stopped, and the other lug 42 is adapted to come in contact with the stop 49 for stopping the bar 35. The two lugs 43 and 44 of the second yarn guide bar 36 are in a similar manner adapted to work with the stops 50 and 55, and the two lugs 45 and 46 of the third yarn guide bar 37 are adapted to work with the two stops 51 and 56 respectively. A controlling slide 57 is vertically guided in one main slide 23 and a second controlling slide 58 in the other main slide 24. The controlling slide 57 has a crooked oblique slot 59, in which a pin 60 on the subsidiary slide 47 engages. The other controlling slide 58 has an opposite slot 61, in which a pin 62 on the other subsidiary slide 52 engages. The controlling slide 57 carries at its lower end a roller 63, which is adapted to roll on a cam bar 64 and over a cam 65 provided on the latter. The other controlling slide 58 likewise carries at its lower end a roller 66, which is adapted to roll on the cam bar 64 and over a second cam 67. The two controlling slides 57 and 58 may be pressed downward by their own weight or by springs of any known kind (not shown).

The cam bar 64 is horizontally guided in the frame 2 and carries a pin 68 which is operated from the cam shaft 1 in the following manner. A small bevel wheel 69 splined on the cam shaft 1 meshes with a large bevel wheel 70 keyed upon a shaft 71, which turns in the frame 2 and has fastened on it at the rear end a cam disk 72. A suitable part of the frame 2 carries a pin 73 on which a link 74 is mounted to rock, and another part of the frame 2 carries a pin 75, on which a lever 76 can rock. At the upper end the lever 76 has a slot 77, in which the said pin 68 engages. The link 74 is pivotally connected with the lever 76 by a rod 78 carrying two rollers 79 and 80 which are adapted to simultaneously roll on the periphery of the cam disk 72 from opposite sides. As the diameter of the large bevel wheel 70 is twice that of the small bevel wheel 69, it will be understood, that on every revolution of the cam shaft 1 the cam bar 64 will make one stroke in either direction. The parts 69, 70, 71, 72, 73, 74, 75, 76, 78, 79, 80 are substantially the same as similar parts of the yarn guide traverse mechanism to be found on any known Cotton's hosiery frame, the only difference being, that they actuate the cam bar 64 and not the known slide carrying

the yarn guide bars. The cam bar 64 carries several bearings 81, 81, in which a shaft 82 is mounted to rock, while it is in any known manner prevented from longitudinal motion, so that it is obliged to partake in the reciprocating motion of the cam bar 64. The right end of the shaft 82 in Fig. 4 passes through the nave of an arm 83 (Fig. 5) and is provided with a groove, in which a feather in this nave engages. The arm 83 is in any known manner prevented from endwise motion and is pivotally connected with a vertical rod 84, which is operated from any known device that ordinarily serves for periodically changing the connection shown at 85, 88, 89 from one yarn guide bar to any of the other yarn guide bars. The three yarn guide bars 35, 36, 37 have fastened on them inclined forks 85, 86, 87 respectively, into any of which an arm 88 fastened on a sleeve 89 can engage. The sleeve 89 is in any known manner prevented from turning on the shaft 82 and is frictionally held thereon, so that it normally moves together with the latter, but on being stopped in a manner to be described later on it can slide on the shaft 82.

The straight hosiery frame operates as follows: By turning the hand-crank 28 the two main slides 23 and 24 are moved away from one another into their initial position. When the machine is in working order and at a moment the arm 88 on the sleeve 89 engages the fork 85 on the front yarn guide bar 35 and the cam bar 64 is moved from right to left in the direction of the arrow 90 in Figs. 7 and 8, about in the middle of the stroke of the cam bar 64 the roller 66 of the right controlling slide 58 will occupy the position shown at Fig. 2, so that it is about to roll on the cam 67. Then it will raise the controlling slide 58 and at the same time the subsidiary slide 52 will be moved by its pin 62 engaging in the slot 61 of the controlling slide 58 in a direction opposite to that of the arrow 90. On about 70% of the stroke being completed, the roller 66 will be on the summit of the cam 67, so that the pin 62 engages in the deepest portion of the crooked slot 61 and consequently the subsidiary slide 52 occupies its extreme position on the right and its stop 54 will be but at a small distance from the lug 42 of the yarn guide bar 35, which latter has been moved along with the cam bar 64. Shortly afterward the roller 66 commences to descend, as is shown at Fig. 7, so that the pin 62 of the subsidiary slide 52 engages in the crooked slot 61 at a point above the lower end of the latter, which means, that the subsidiary slide 52 has been moved through a small distance in the direction of the arrow 90. At the same time by the cam bar 64 the front yarn guide bar 35 has also been moved forward in the same direction, so that its lug 42 just comes in contact with the stop 54, as is clearly shown at Fig. 7. During the continued motion of the cam bar 64 in the direction of the arrow 90 the pin 62 of the subsidiary slide 52 will relatively move in the slot 61 of the controlling slide 58 upward, which means, that the subsidiary slide 52 will move more slowly in the direction of the arrow 90 than the cam bar 64 and the yarn guide bar 35 and consequently it will retard by its stop 54 and the lug 42 the yarn guide bar 35. At the moment that the roller 66 is about to leave the cam 67 (see Fig. 8), the pin 62 of the subsidiary slide 52 engages in the upper end of the crooked slot 61, so that both the stop 54 and the lug 42 will stop and the yarn guide bar 35 will be prevented from further moving, while the cam bar 64 may continue moving farther, before it stops and its motion is reversed. It is obvious, that in this manner any shock or blow between the stop 54 and the lug 42 can be avoided.

During the described motion of the cam bar 64 in the direction of the arrow 90, of course also the roller 63 of the left controlling slide 57 will have rolled over the left cam 65, so that the oppositely inclined slot 59 in the left controlling slide will by the pin 60 have moved the left subsidiary slide 47 first in the direction of the arrow 90 and afterward in the opposite direction. As, however, in the meantime the other lug 41 of the front yarn guide bar 35 remains out of reach of the stop 49, no effect will be produced by the left cam 65 during the stroke in the direction of the arrow 90. It is only during the stroke in the opposite direction, that the left cam 65 is able to produce a gradual and silent stoppage of the front yarn guide bar 35 by means of the stop 49 and the lug 41 in a similar manner as explained above with reference to the right cam 67. The sleeve 89 frictionally held on the shaft 82 permits it to vary the stroke of any of the yarn guide bars 35, 36, 37, while the stroke of the cam bar 64 remains constant, so that the goods can be widened or narrowed as usual. The ratchet wheel 29 on the screw-spindle 25 is fed one tooth forward by the pawl 34 for every revolution of the cam shaft 1, so that the two main slides 23 and 24 are simultaneously moved together through the distance of one or several pitches of the frame needles 20, as the case may be, whereby the stroke of any of the yarn guide bars 35, 36, 37 is gradually shortened as usual.

When by the mentioned known device the rod 84 (Fig. 5) is so actuated, as to move by the arm 83 and the shaft 82 the arm 88 of the sleeve 89 out of engagement with the fork 85 of the front yarn guide bar 35 into engagement with say the fork 87 of the rear yarn guide bar 37, the latter will be alter-

nately and gradually stopped by the two adjustable stops 51 and 56 in a similar manner to that described above with reference to the front yarn guide 35.

When by turning the hand crank 28 the two main slides 23 and 24 are moved away from one another and brought into their initial position, and the cam bar 64 occupies its extreme right position, about as is shown at Fig. 2, the rollers 63 and 66 of the two controlling slides 57 and 58 may occupy about the position shown at Fig. 2, so that at the end of the stroke of the cam bar 64 in the direction of the arrow 90 the right roller 66 will be on the right side of the cam 67 at a distance from the commencement of the cam, which distance may be about like the length of the cam 67. Then during the narrowing of the goods the distance of the two main slides 23 and 24 will be gradually diminished, until for the minimum distance of the two main slides 23 and 24 and for the extreme left position of the cam bar 64 the right roller 66 is about above the commencement of the cam 67 on its right side in Fig. 2. In a similar manner the left cam 65 may be proportioned with regard to the right roller 63.

The new mechanism described can be varied in many respects without departing from the spirit of my invention.

I claim:

1. In a straight hosiery frame, the combination with a frame, of two main slides guided in said frame, yarn guide bars guided in said frame and having two lugs each, two subsidiary slides guided in said two main slides, a cam bar guided in said frame parallel to said yarn guide bars and provided with two cams, means operated from said cam bar and its two cams for reciprocating said two subsidiary slides, stops on said two subsidiary slides, each stop being adapted to come in contact with one lug of the corresponding yarn guide bar and to move with same while retarding it until both stop, a mechanism for feeding said two main slides in opposite directions, means for yieldingly connecting any of said yarn guide bars with said cam bar, and means for longitudinally reciprocating said cam bar.

2. In a straight hosiery frame, the combination with a frame, of two main slides guided in said frame, yarn guide bars guided in said frame and provided with two lugs each, two subsidiary slides guided in said two main slides parallel to said yarn guide bars and having each a pin, a cam bar guided in said frame parallel to said yarn guide bars and provided with two cams, two controlling slides guided in said two main slides at right angles to said cam bar and adapted to bear on same and its two cams, each controlling slide having an inclined slot opposite to that of the other controlling slide which slot is adapted to guide the pin of the corresponding subsidiary slide, stops on said two subsidiary slides, each stop being adapted to come in contact with one lug of the corresponding yarn guide bar and to move with same while retarding it until both stop, a mechanism for feeding said two main slides in opposite directions, means for yieldingly connecting any of said yarn guide bars with said cam bar, and means for longitudinally reciprocating said cam bar.

3. In a straight hosiery frame, the combination with a frame, of two main slides guided in said frame, a screw-spindle with right- and left- handed threads mounted in said frame to turn and engaging said two main slides, means for feeding said screw-spindle, yarn guide bars guided in said frame and provided with two lugs each, two subsidiary slides guided in said two main slides parallel to said yarn guide bars and having each a pin, a cam bar guided in said frame parallel to said yarn guide bars and provided with two cams, two controlling slides guided in said two main slides at right angles to said cam bar, two rollers at said two controlling slides adapted to roll on said cam bar and its two cams, each controlling slide having an inclined slot opposite to that of the other controlling slide which slot is adapted to guide the pin of the corresponding subsidiary slide, stops on said two subsidiary slides, each stop being adapted to come in contact with one lug of the corresponding yarn guide bar and to move with same while retarding it until both stop, means for yieldingly connecting any of said yarn guide bars with said cam bar, and means for longitudinally reciprocating said cam bar.

4. In a mechanism of the character described, the combination with a frame, of a reciprocatory yarn guide bar mounted in the frame and provided with two suitably spaced lugs, two stops mounted on the frame and adapted to coöperate with the lugs on said yarn guide bar to limit the reciprocatory movement of said bar, and means for imparting a relative movement between each of said stops and the coöperating lug, independent of the movement of the yarn guide and in the direction of the length of said bar, as the bar approaches the limit of its travel in either direction, whereby the lug and stop will contact without appreciable jar or shock.

5. In a mechanism of the character described, the combination with a frame, of a reciprocatory yarn guide bar mounted in the frame and provided with two suitably spaced lugs, two stops mounted on the frame and adapted to coöperate with the lugs on said yarn guide bar to limit the reciprocatory movement of said bar, and means for alter-

nately reciprocating the stops in the direction of the length of the yarn guide bar as the bar approaches the limit of its movement in opposite directions to cause the lugs and stops to contact without appreciable shock.

6. In a mechanism of the character described, the combination with a frame, of a reciprocatory yarn guide bar mounted in the frame and provided with two suitably spaced lugs, two stops mounted on the frame and adapted to coöperate with the lugs on said yarn guide bar to limit the reciprocatory movement of said bar, means for simultaneously moving said stops in opposite directions, and means for alternately moving said stops in a direction opposite to that in which the bar is moving, and toward the coöperating lug on said bar, the stop being returned to its previous position by the movement of said bar.

7. In a knitting machine having a traversing yarn guide, the combination of a bar for traversing said guide, friction driving means for traversing said bar, abutment stops to limit the traverse of said yarn guide, and means to cause said stops to move with the bar but at a less rate when the end of the traverse is approached to gradually check and stop said movement.

THEODOR LIEBERKNECHT.

Witnesses:

MAX F. BENNDORF,

WILLIAM J. KOUJETSOY.

543

Dec. 8, 1925. 1,564,438

J. MULLER

ATTACHMENT FOR KNITTING MACHINES

Filed Oct. 20, 1923 2 Sheets-Sheet 1

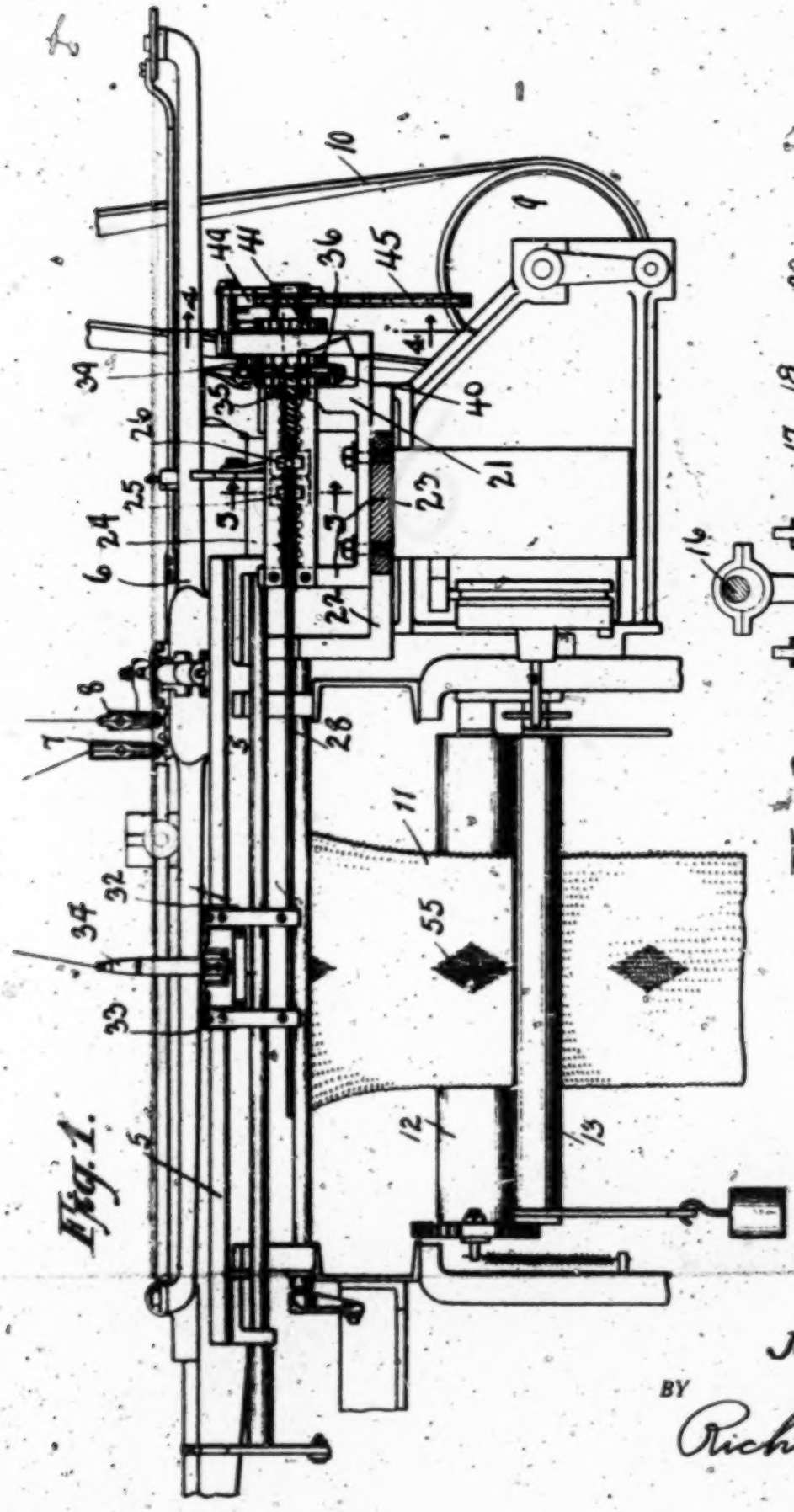

Fig. 1.

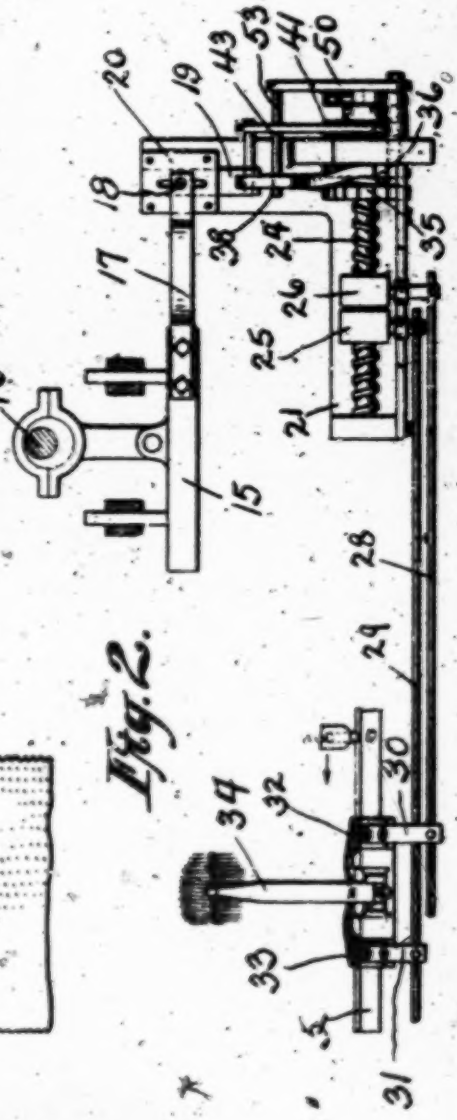

Fig. 2.

INVENTOR.
JOHN MULLER

BY
Richard B. Owen
ATTORNEY.

544

Dec. 8, 1925. 1,564,438

J. MULLER

ATTACHMENT FOR KNITTING MACHINES

Filed Oct. 20, 1923 2 Sheets-Sheet 2

Fig. 3.

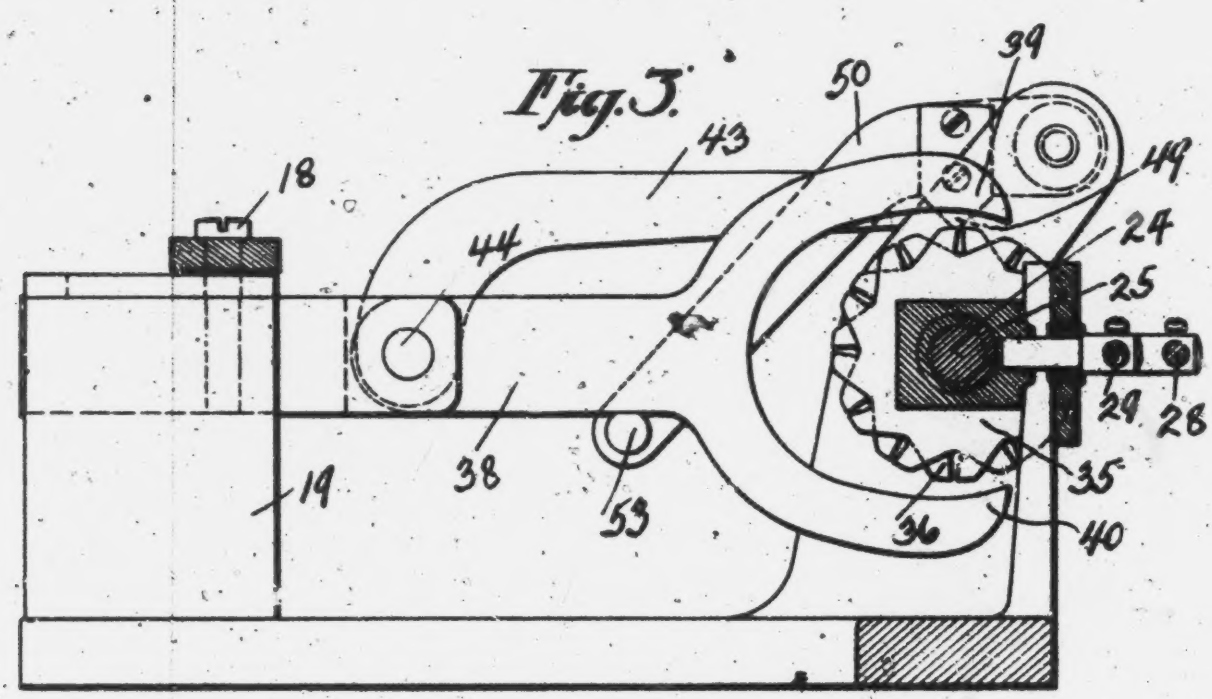

Fig. 4.

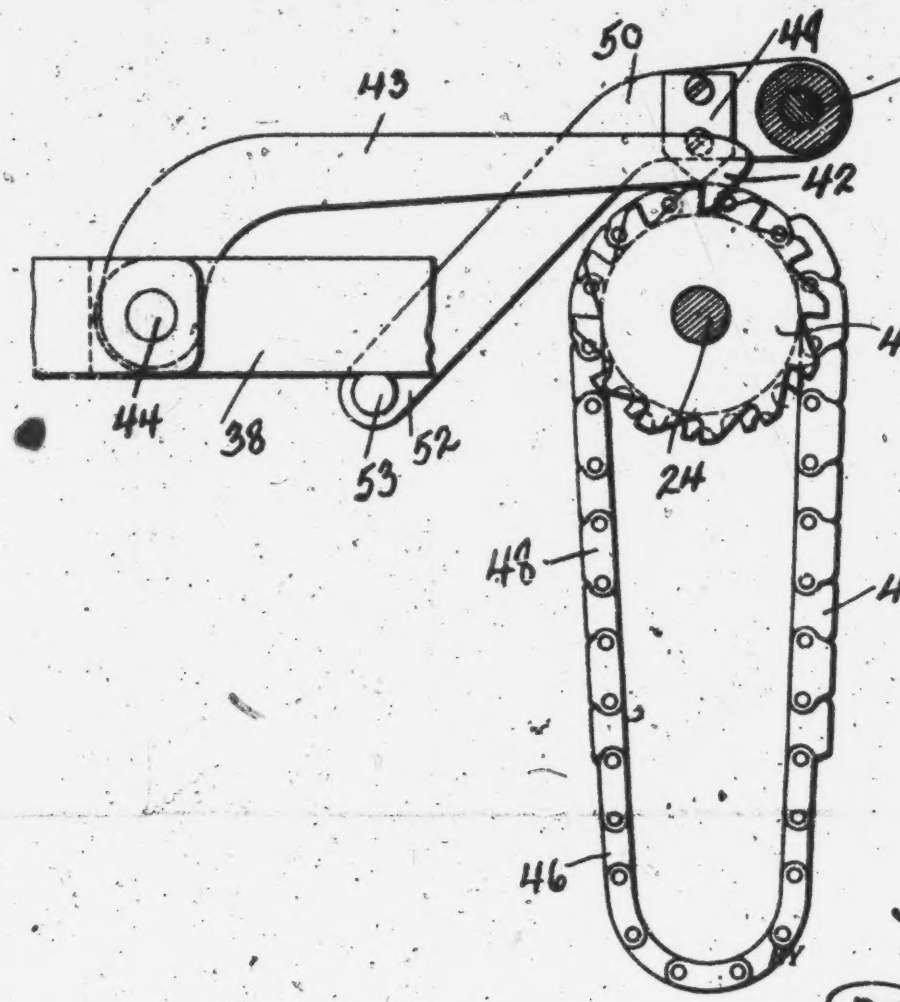

INVENTOR.
JOHN MULLER

Richard B. Owen
ATTORNEY.

Patented Dec. 8, 1925. 1,564,438

UNITED STATES PATENT OFFICE.

JOHN MULLER, OF BROOKLYN, NEW YORK.

ATTACHMENT FOR KNITTING MACHINES.

Application filed October 20, 1923. Serial No. 669,222.

To all whom it may concern:

Be it known that I, JOHN MULLER, a citizen of Yugoslavia, residing at Brooklyn, in the county of Queens and State of New York, have invented certain new and useful Improvements in Attachments for Knitting Machines, of which the following is a specification.

This invention relates to attachments for knitting machines and more particularly to a novel and improved mechanism for knitting various designs or objects in arbitrary spaced relation and of different color.

The primary object of my invention is to provide an attachment or mechanism to a knitting machine and operable therewith wherein the yarn carrier stoppers and a yarn carrier may be moved relative to each other at predetermined intervals without effecting the operation of the rear yarn carriers whereby arbitrary objects of different color may be knitted.

Another object of my invention is to construct a novel and improved mechanism which can be attached or connected to the forwardly and rearwardly movable bar operable by the eccentric of a flat knitting machine, including provision for intermittently moving the yarn carrier stoppers relative to each other at predetermined intervals thus permitting the knitting of various colored designs without stopping the operation of the machine.

Another object of my invention is to provide a knitting attachment of the character above specified adapted to be connected or attached to the operating mechanism of a knitting machine including mechanism for automatically and uniformly moving or spacing a pair of yarn carriers proper and reversing their direction of movement at predetermined intervals whereby various designs or figures of different colored yarns or threads may be knitted on the main strip or breadth of material.

To enable others skilled in the art to fully comprehend the underlying features of my invention that they may embody the same in the various modifications in structure and relation contemplated, drawings depicting a preferred form have been annexed as a part of this disclosure and in such drawings, similar reference characters denote corresponding parts thoughout all the views, of which,

Figure 1 is a front view showing the knitting machine and the relative position of the attachment connected thereto.

Figure 2 is a view of the attachment or mechanism connected to the forwardly and rearwardly movable bar operable by the eccentric and also showing the relative position of the yarn carrier stoppers and the yarn carrier.

Figure 3 is an enlarged view, taken substantially on the line 3—3 of Figure 1.

Figure 4 is a further view taken substantially on the line 4—4 of Figure 1.

Referring now to the drawing wherein like reference characters designate corresponding parts throughout the several views, 5 designates the stationary carrier bar and 6, the movable carriage which operates from the right to the left during the operation of the rear yarn carrier shown by numerals 7 and 8, all of said mechanism being operable by the pulley and belt construction 9, 10, commonly known in the art as the flat knitting machine. The knitted material is indicated at 11 and extends downwardly between a pair of rollers 12, 13, below the stationary yarn carrier bar 5, above referred to. The flat knitting machine also includes the bar 15 which is operated backward and forwardly by an eccentric 16, shown clearly by Figure 2 of the drawings, the last mentioned bar constituting the operating or driving means for actuating the mechanism now to be described in detail.

Attached to one end of the bar 15, I have provided a bracket 17, the outer end of which is connected by a bolt 18 to a sliding block 19. The block is positioned at the inner end 20 of a U-shaped casting 21, bolted to the stationary part of the frame 22 by suitable fastening elements clearly shown by Figure 1 of the drawings. Journaled between the upright legs 23 of the U-shaped casting, I have provided a right and left hand screw 24 on which a pair of internally threaded nuts or blocks 25, 26 are positioned. A pair of horizontal transversely, extending, parallel connecting rods 28, 29 are connected to the blocks 25, 26, and to the flat, depending metal strips 30, 31 of a pair of yarn carrier stoppers 32, 33, which control the relative movement of a front yarn carrier 34, which yarn carrier, of course, cooperates with the needles of the knitting machine. In other words, the yarn carrier stoppers 32, 33, are spaced relative to each other, the yarn carrier 34 may move horizontally and

effect only those needles in its path of movement and consequently, the greater the movement of the yarn carrier, the greater the number of needles and consequently, the greater the number of stitches are made. It will therefore be seen that by spacing the yarn carrier stoppers, an arbitrary distance on the yarn carrier bar 5, the front yarn carrier may knit without affecting the operation the rear yarn carriers 7, 8, and thus different colored threads may be utilized to produce the different designs such as blocks, diamonds, or any other designs on the strip being knitted.

In order to effect the relative movement of the yarn carrier stoppers 32, 33, through the connecting rods 28, 29 and their respective blocks 25, 26, I have provided and mounted on the right and left hand screw 24, a pair of ratchets 35, 36, the teeth of said ratchets extending in reverse direction as shown by Figure 3 of the drawings.

Loosely connected to the sliding block 19 for vertical movement, there is provided a fork-shaped element 38, the upper and lower jaws 39, 40, of which are bent in reverse or opposite direction so that said jaws may engage the reversely angle teeth of the ratchets 35, 36, when said element 38 is lowered and raised. This movement will of course effect the direction of rotation of the right and left hand screw 24 and consequently the spreading or relative movement of the blocks 25, 26, so that when the jaw 39 is in engagement with one of the ratchets, the screw 24 will be rotated so as to spread the blocks 25, 26 and consequently space the yarn carrier stoppers 32, 33. On the other hand when the element 38 is raised so that the jaw 40 engages the adjacent ratchet, the screw 24 will be rotated in the opposite direction and thus the blocks 25, 26 will move toward each other and thus regulate the distance or number of needles engaged by the yarn carrier 34.

In order to effect the automatic, regular spacing of the blocks 25, 26, at predetermined intervals during the knitting operation, a ratchet 41 is loosely mounted on the shaft 24, the teeth of said last mentioned ratchet being engaged by the other end 42 of a lever 43 pivotally connected as at 44 to the fork-shaped lever 38. Upon each reciprocation therefor of the eccentric and the forward and rearward movement of the bar 15, the lever 43 will actuate the ratchet one tooth or the distance of one of the links of an endless chain 45, also loosely mounted on the ends of the shaft 24, above referred to. It will be seen that the endless chain 45 comprises a series of what I term low links 46, high links 47 and neutral links 48, which are adapted to engage an extension plate 49 attached to an angularly bent lever 50. The upper end of the lever is pivotally connected as at 51 to a stud and the lower end 52 of said lever carries a horizontally extending pin 53, which is adapted to engage beneath the fork element 38 as clearly shown by Figures 3 and 4 of the drawings. By reason of this construction, it will be seen that when the shaft 24 is actuated by the reciprocation of the sliding block 19 and the lever 43, as the high links travel and engage the extension plate 49, the lever 50 will be raised and consequently the pin 53 will raise the fork-shaped element 38 so that the jaw 40 will engage the ratchet 35, moving the screw shaft 24 in one direction. As this operation is effective, the blocks move to their extreme position until the low links pass beneath the extension plate 49 whereupon the fork-shaped element 38 lowers until the jaw 39 engages the contiguous ratchet and the screw 24 is moved in the opposite direction and the blocks travel toward each other, in each instance, the yarn carrier stoppers moving in the same relative direction as said block. When the neutral links pass beneath the extension plate 49, both jaws 39 and 40 are disengaged from the ratchet and consequently the blocks 25, 26, do not move. Thus the neutral links are introduced in the endless chain in order to permit of the spacing of the design, which in one form is shown as a diamond and indicated at numeral 55.

In the construction shown and above described, it will be easily understood that the size or width of the design, such as the diamond, will depend on the relative spacing of the yarn carrier stoppers and consequently if the number of links in the endless chain is increased or decreased, they will effect the relative movement of the blocks 25, 26, and necessarily the yarn carrier stoppers referred to. It will be further recognized that various designs may be made by alternating the high and low links with certain of the neutral links so that in each case, the blocks 25, 26, may be separated or moved relative to each other arbitrary distances, which affects the number of needles which cooperate with the yarn carrier 34.

In the type of machine shown, when the yarn carrier 7 moves backward and forward the rear yarn carrier 8 and the front yarn carrier 34 do not operate, at which interval the neutral links of the endless chain pass beneath the extension plate 49, however, when the yarn carrier 34 begins to operate the rear yarn carrier 8 operates back and forward and the yarn carrier 7 remains stationary, so that when two different kinds or color of yarn are wound through the yarn carriers 8 and 34, a double stitch is thus made and the particular design, such as the diamond 55, is set out somewhat in relief.

While I have shown the mechanism as attached to a flat knitting machine, it will

be readily recognized by those skilled in the art that the attachment is equally capable of being positioned on other types of machines to accomplish the same purposes.

While I have illustrated and described my invention with some degree of particularity, I realize that in practice various alterations therein may be made. I therefore reserve the right and privilege of changing the form of the details of construction or otherwise altering the arrangement of the correlated parts without departing from the spirit of the invention or the scope of the appended claims.

Having thus described my invention what I claim as new and desire to secure by United States Letters Patent is:—

1. In combination with the yarn carriers and operating mechanism of a knitting machine, yarn carrier stoppers, a pair of parallel connecting rods attached to each of the stoppers, a single right and left hand threaded rod having blocks movable thereon connected to each of the said rods, and means cooperating between the threaded rod and the operating mechanism to actuate the blocks and the connecting rods at predetermined intervals and space the yarn carrier stoppers during the operation of the machine.

2. In combination with the yarn carriers and operating mechanism of a knitting machine, yarn carrier stoppers, a pair of parallel connecting rods attached at one end to each of the stoppers, a threaded shaft having blocks movable thereon, attached to the opposite ends of the connecting rods, a forked member cooperating with the shaft and the operating mechanism to actuate the blocks and the connecting rods and yarn carrier stoppers at predetermined intervals and means to reverse the direction of actuation of said blocks during the operation of the machine.

3. In combination with the yarn carriers and operating mechanism of a knitting machine, yarn carrier stoppers, a pair of connecting elements attached to said stoppers, a threaded shaft having blocks mounted thereon attached to the opposite ends of the connecting elements, and means cooperating with the operating mechanism for reversing the direction of rotation of said shaft at predetermined intervals to relatively space the yarn carrier stoppers.

4. In combination with the yarn carriers and operating mechanism of a knitting machine, yarn carrier stoppers, a pair of connecting elements attached at one end to each of said stoppers, a freely rotatable threaded shaft having feed blocks mounted thereon, connected to the opposite ends of the connecting elements, means operable by the operating mechanism of the knitting machine for actuating said shaft and independent means for reversing the direction of rotation of the shaft at predetermined intervals.

5. In combination with the yarn carriers and operating mechanism of a knitting machine, yarn carrier stoppers, a pair of parallel connecting rods attached at their ends to said stoppers, a freely rotatable right and left hand threaded shaft, feed blocks mounted on the shaft and connected to the opposite ends of the rods, a sliding block operable by the operating mechanism of the machine, a loose ratchet and chain freely mounted on the shaft, a pair of reverse gears keyed to the said shaft, means operable by the block to engage either of the said gears and means cooperating with the loose chain to engage said reverse gears at predetermined intervals and space said blocks and the yarn carrier stoppers.

6. In combination with the yarn carriers and operating mechanism of a knitting machine, yarn carrier stoppers, connecting rods attached to said stoppers, a shaft having feed blocks thereon connected to the opposite ends of the rods, a sliding block operable by the operating mechanism reverse gears on the shaft, a single forked element for engaging either of said gears actuated by said block and means for raising and lowering said element at predetermined intervals to reverse the direction of rotation of said shaft.

7. In combination with the yarn carriers and operating mechanism of a knitting machine, yarn carrier stoppers, connecting rods attached to said stoppers, a shaft having feed blocks thereon movable in opposite directions connected to the opposite ends of the rods, a sliding block operable by the operating mechanism, a loose ratchet and chain on the shaft, reverse gears mounted on said shaft, a forked lever adapted to engage either of said gears, and means operable by the loose chain to raise and lower the forked lever to engage the gears at predetermined intervals and reverse the direction of rotation of the shaft and the feed blocks.

In testimony whereof I affix my signature.

JOHN MULLER. [L. S.]

549

Oct. 11, 1927. 1,644,688

E. OESTERREICH

KNITTING MACHINE

Filed Sept. 21, 1923 4 Sheets-Sheet 1

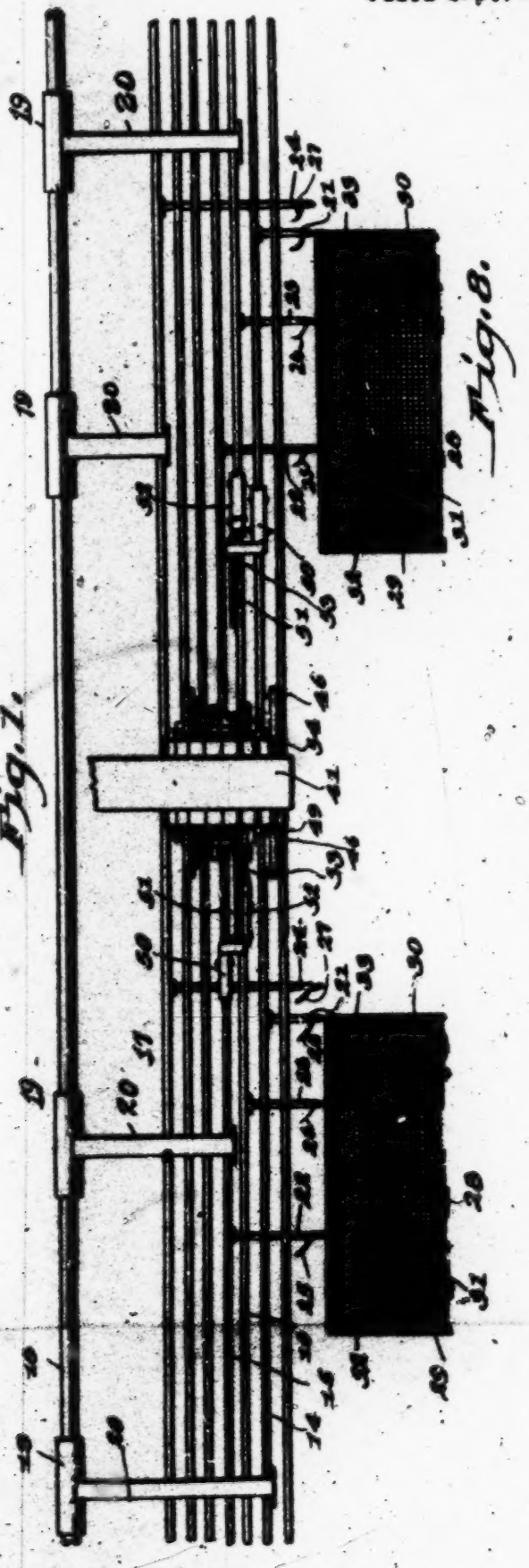

Fig. 1.

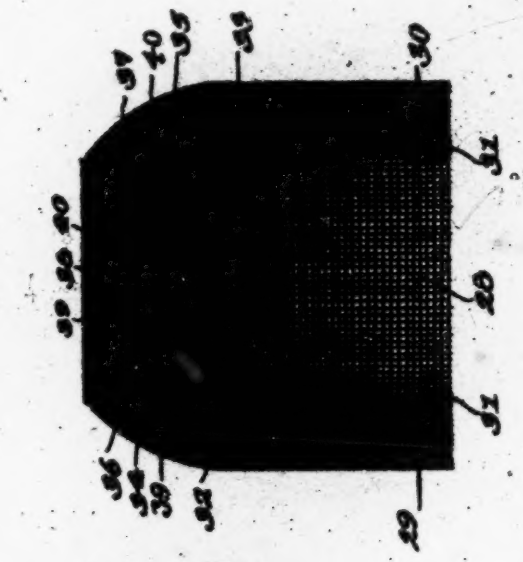

Fig. 8.

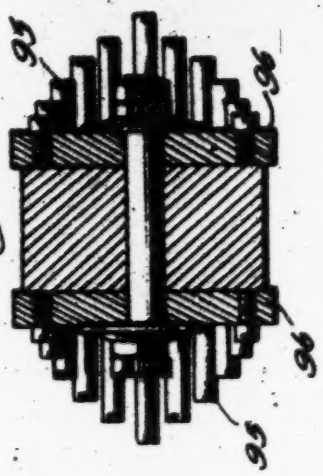

Fig. 10.

Fig. 11.

INVENTOR
Edward Oesterreich
BY
ATTORNEY

550

Oct. 11, 1927. 1,644,688

E. OESTERREICH

KNITTING MACHINE

Filed Sept. 21, 1923 4 Sheets-Sheet 2

Fig. 3.

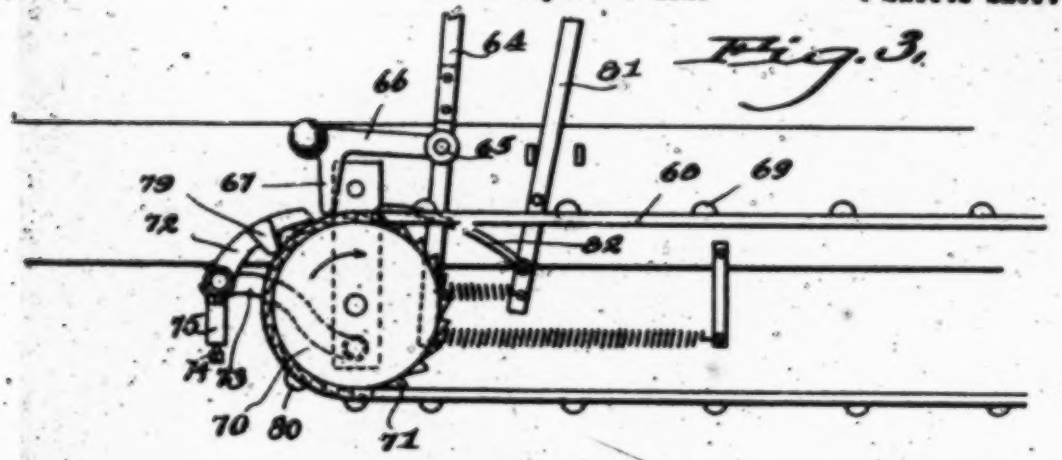

Fig. 4.

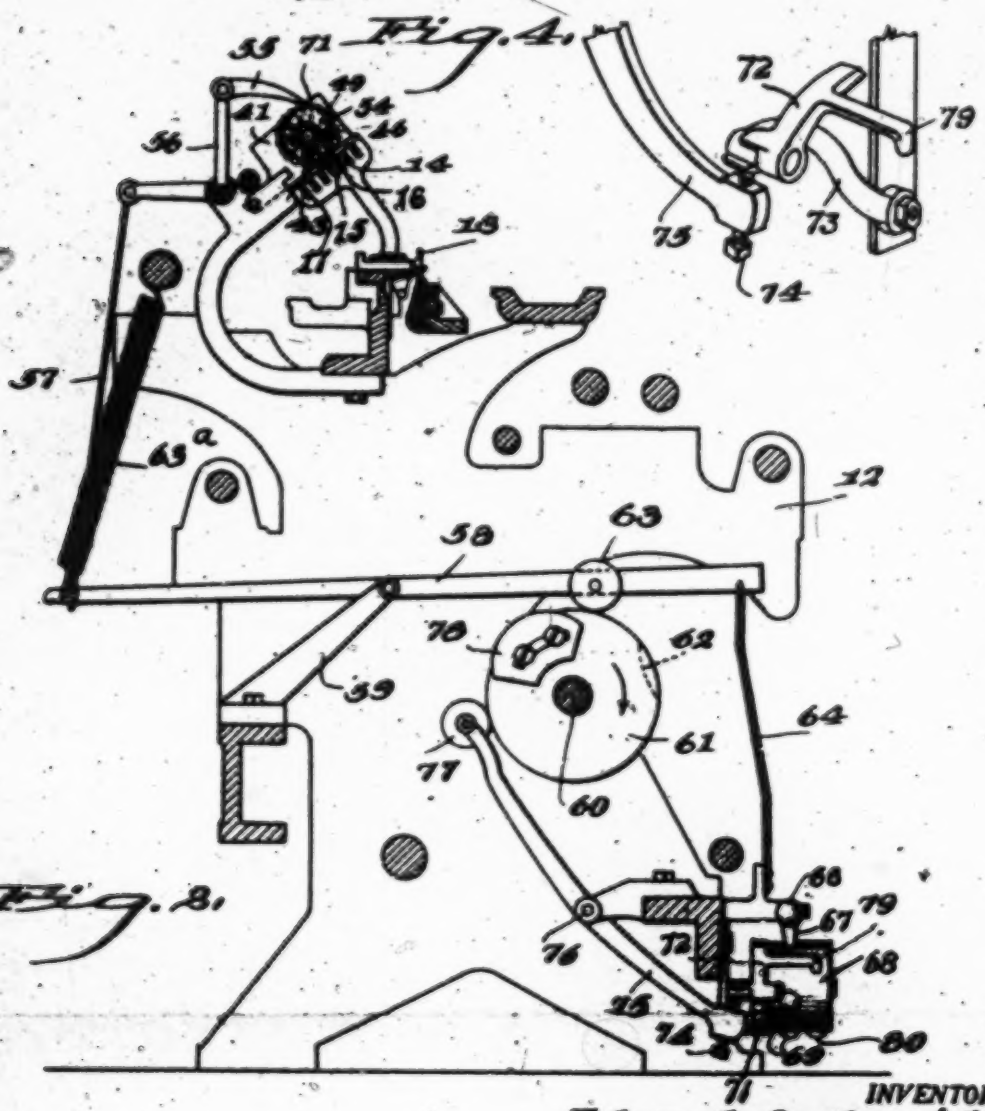

Fig. 2.

INVENTOR.
Edward Oesterreich
BY
ATTORNEY

551

Oct. 11, 1927. 1,644,688

E. OESTERREICH

KNITTING MACHINE

Filed Sept. 21, 1923 4 Sheets-Sheet 3

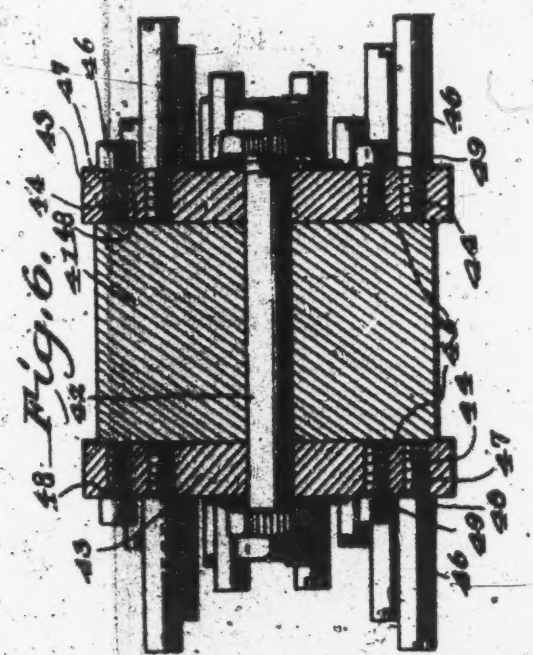

Fig. 6.

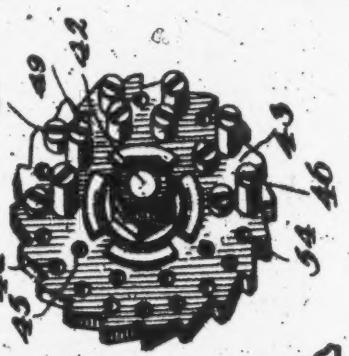

Fig. 7.

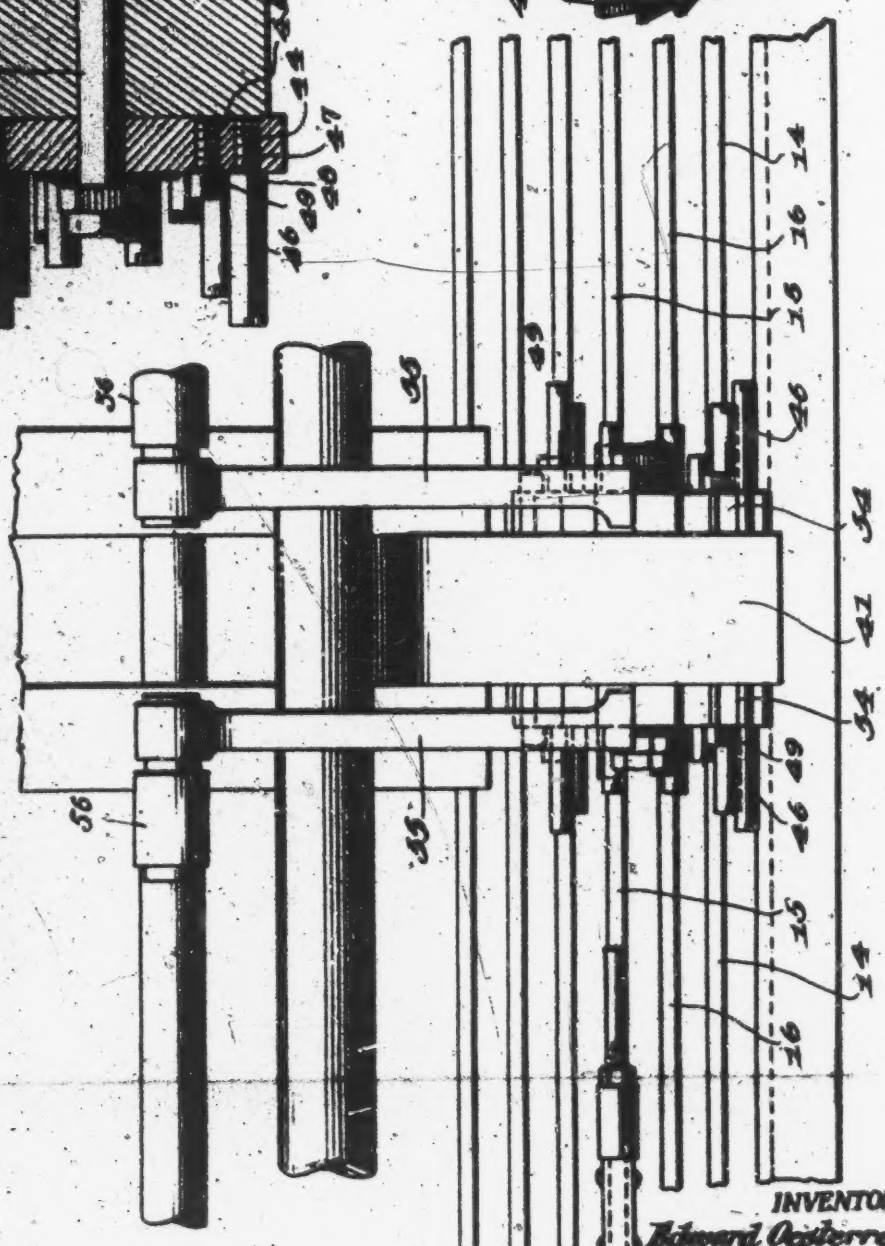

Fig. 5.

INVENTOR,
Edward Oesterreich
BY
ATTORNEY.

552

Oct. 11, 1927. 1,644,688

E. OESTERREICH

KNITTING MACHINE

Filed Sept. 21, 1923 4 Sheets-Sheet 4

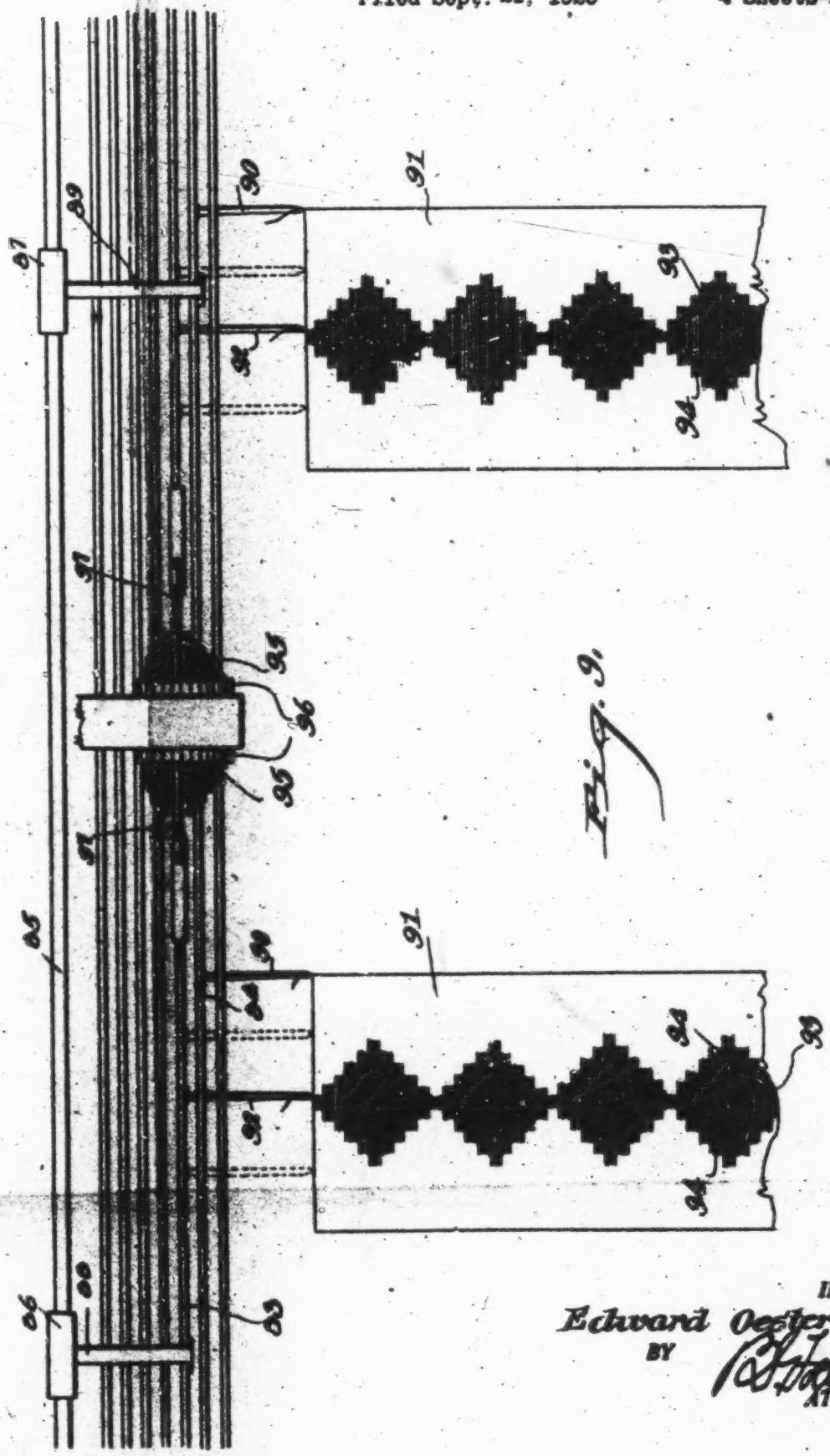

Fig. 9.

INVENTOR.
Edward Oesterreich
BY
ATTORNEY.

Patented Oct. 11, 1927. 1,644,688

UNITED STATES PATENT OFFICE.

EDWARD OESTERREICH, OF PHILADELPHIA, PENNSYLVANIA.

KNITTING MACHINE.

Application filed September 21, 1923. Serial No. 664,292.

The present invention relates more particularly to apparatus for knitting full fashioned hosiery and the like, and is peculiarly, though not exclusively, useful in the production of stockings having portions of light material, such as silk and other portions of heavier wear-resisting material as cotton.

One of the objects is to provide mechanism of a simple character, by which the light and heavy threads can be laid in the needles to produce effective reenforcements between the light and heavy portions and also artistic designs of a novel character. A further and important object is to provide mechanism that will withstand the necessary shocks and jars without distortion that would affect a fault or error in the design produced. A still further object is to provide mechanism that can be easily altered so that the design may be varied as desired.

In the accompanying drawings:—

Figure 1 is a plan view of a portion of a well-known type of knitting machine, somewhat diagrammatic in its character and provided with the novel construction.

Figure 2 is a cross sectional view taken substantially on the line 2—2 of Figure 1.

Figure 3 is a detail front elevation of the control mechanism.

Figure 4 is a detail perspective view of the operating pawl for said control mechanism.

Figure 5 is a plan view on an enlarged scale of the abutment members and their operating pawls.

Figure 6 is a detail longitudinal sectional view thereof.

Figure 7 is a perspective view of one of the abutment carriers and the abutments thereon.

Figure 8 is a plan view of a completed stocking toe blank.

Figure 9 is a plan view of a modified form of construction, showing the production of a spliced design in the legs of stockings.

Figure 10 is a longitudinal sectional view through the abutment structure shown in Figure 9.

Figure 11 is an end elevation of one of the abutment members and the abutments thereon, illustrated in Figure 10.

Portions of the frame of a well-known type of knitting machine are shown in Figure 2, and are designated 12. The machine includes the usual banks of needles, as indicated at 13. Over said banks are the usual longitudinally reciprocatory carrier rods. For the purpose of explaining this embodiment of the invention certain of these rods are designated respectively 14, 15, 16 and 17. The rods are moved back and forth by a longitudinally reciprocatory friction shaft 18 carrying friction boxes 19 having arms 20 that are engaged with the rods 14—17, to move the same.

The carrier rod 14 has mounted thereon a plurality of thread carriers 21. The carrier rod 15 is provided with thread carriers 22. The carrier rod 16 is provided with thread carriers 23 and the carrier rod 17 is provided with thread carriers 24.

Inasmuch as the disclosed arrangement is set up for the purpose of knitting stocking feet having cotton soles and silk upper portions, with a cotton toe cap, the thread carriers 21 and 22 are adapted to lay cotton threads 25 in the needles 13, the thread carriers 23 supply silk 26 to certain of the needles and the thread carriers 24 deliver a special heavier cotton thread 27 for the purpose of forming the toe cap. This set up moreover is particularly adapted to produce full fashioned stocking feet of the type wherein the silk is extended well down into the toe, and the corners formed by the cotton toe cap and cotton foot are reenforced by stepped splices of cotton and silk.

Referring therefore to Figure 8, showing the blank of such a foot structure, a silk top portion 28 is provided with marginal sole sections 29 and 30 of cotton on opposite sides of the top portion 28 and knitted thereinto. In other words the silk and cotton threads are overlapped or spliced at their juncture as shown at 31. As the toe is approached, the widths of the sole portions 29 and 30 are increased inwardly, and the width of the top portion 28 is correspondingly decreased. This is done by a series of successive steps 32 and 33, and during the formation of said steps the outer seams 34 and 35 only of the narrowing fingers 36 and 37 are formed. When the silk top portion 28 is terminated the toe cap 38 is started and the inner seams 39 and 40 of the narrowing fingers 36 and 37 are made. In the production of the steps 32 and 33 the cotton and silk extend across each successive set of steps, so that said steps are reenforced or in other word are formed by spliced or overlying cotton and silk threads. For the pro-

duction of these stocking feet the following mechanism is employed. A relatively heavy and rigid supporting arm 41 overlies the carrier rods 14—17, and extending therethrough is an axle 42 that projects beyond the opposite sides of the arm 41 and has journaled thereon abutment carriers in the form of disks 43. The disks are provided with an outer circular series of threaded openings 44 and an inner circular series of threaded openings 45. In the outer series is screwed a series of abutment pins 46 successively shorter in length and forming a stepped set of abutments. These pins preferably have reduced stems 47 that are screwed into the openings 44 and have shoulders 48 that bear against the outer faces of the disks. In the inner series of openings 45 are screwed a set of stepped abutments 49 corresponding to the outer series but arranged in reversed relation. In other words the longest pin 46 of the outer series is adjacent to the shortest pin 49 of the inner series.

The carrier rods 14 and 15, which operate the cotton thread carriers 21 and 22, have secured thereto brackets 50, in which are adjustably mounted stop pins 51, and the abutment pins 49 are so disposed that on the rotation of the disks 43 they will be brought into the paths of the stop pins 51 and thus determine the amount of movement allowed to the carrier rods 14 and 15, and consequently to the cotton carriers 21 and 22. Mounted on the silk carrier rod 16 are brackets 52 carrying adjustable stop pins 53. The inner set of stepped abutment pins 49 are adapted to correspondingly move into the path of the stop pins 46 and thus determine the traverse of the silk thread carriers 23.

The abutment carrier disks 43 are provided with peripheral ratchet teeth 54 operated on by pawls 55. These pawls 55 are actuated by duplicate mechanisms, and a disclosure and description of one of said mechanisms it is believed will be sufficient for both. The pawl 55 is mounted on the upstanding arm of a bell crank 56, the other arm of which is connected by a link 57 with a lever 58 that is fulcrumed between its ends on a bracket 59, mounted on the machine frame. A constantly rotating cam shaft 60 is provided with a cam 61 having a depressed portion 62, and a roller 63 journaled on the lever 58 rides on the periphery of the cam and is adapted to drop into the depressed portion 62. A spring 63a insures the swinging movement of the lever 58 when said roller is passed by the depressed portion 62, and as a consequence it will be evident that the abutment disk will be intermittently actuated.

The movement of the lever 58 is, however, controlled by a holding dog in the form of an arm 64 that is adapted to swing to a position under the free end of said arm 58 and support it so that it will not move when the depressed portion 62 of the cam 61 passes under the roller 63. This arm 64 as illustrated more particularly in Figures 2 and 3, is fulcrumed on the frame at 65, and has a right angular weighted arm 66 fixed thereto. The arm 64 has a depending finger 67 adapted to ride on the endless belt member 68, and this belt member is provided at intervals with buttons or projections 69 to pass under the finger 67, thereby raising the same, and causing the arm 64 to swing from beneath the lever 58.

The belt 68 passes around a pulley or roller 70 having ratchet teeth 71. Operating on said ratchet teeth is a pawl 72 carried on a swinging arm 73. The free end of this arm is supported on an adjusting screw 74 carried by a lever 75 as shown in Figures 2, 3 and 4. The lever 75 is fulcrumed between its ends, as shown at 76, and is provided at its upper end with a roller 77 that rides on the periphery of the cam wheel 61. This cam wheel is provided with a cam plate 78 adapted to ride against the roller 77, and thereby swing the lever 75. When it swings the arm 73 will be elevated and the pawl 72 engaging behind one of the ratchet teeth 71, will move the roller 70 and thereby the belt 68. The pawl 72 is furthermore provided with an offset finger 79 that normally rides on the belt 68 and said belt is provided at intervals with buttons or projections 80 which pass beneath the finger 79, thereby raising the pawl 72 out of coaction with the ratchet teeth and stopping the movement of the belt.

For the purpose of effecting a further movement of the belt to cause the buttons or projections 80 to pass the fingers 79 a hand lever 81 is fulcrumed on the frame, and is provided with a hook 82 that engages the ratchet teeth 71. By the operation of this lever the roller 70 can be moved far enough to disengage the button 80 from beneath the finger 79, thereby allowing the pawl 72 to again engage with the ratchet teeth 71.

The operation of the apparatus may be outlined as follows. Assuming the stocking foot, as illustrated in Figure 8, is to be knitted, the machine is set to knit the main body with the silk top portion 28 and cotton foot margins 29 and 30 in the usual manner, during which operation the rotary abutment carriers and their abutments are inactive, a button or projection 80 on the belt 68 being beneath the finger 79 and holding the pawl 72 out of engagement with the ratchet teeth 71, while the holding arm 64 is beneath the lever 58. When the point is reached where the steps 32 and 33 are begun, the operator swings the lever 81, thereby moving the roller 70 and the belt 68 a sufficient distance

to permit the pawl 72 to drop into engagement with the ratchet wheel 71, and at the same time a projection 69 moves to a position beneath the finger 67 of the arm 66, thereby swinging the holding arm 64 out of the path of the lever 58. As the cam 51 rotates and the depressed portion 93 passes beneath the roller 63, the lever 58 will be swung and through the link 57 and ball crank 56 the pawl 55 will be moved to turn the abutment disk. As both pawls 55 operate in unison both disks 43 will be actuated. As a consequence the cotton carriers 21 and 22 will be allowed movements equal to the widths of the sole portions 29 and 30, plus the first of the steps 32 and 33, while the silk carrier 23 will have a traverse from the outer edge of the first step on one side to the outer edge of the first step on the opposite side. The button 69 will by this time have passed beyond the finger 67, allowing the stop arm 64 to again swing beneath the lever 58, thereby stopping the rotation of the abutment carriers so that a predetermined number of courses will be formed, producing the first of the steps 32 and 33. The lever 75 is, however, continuously operating, thereby moving the belt 68 step by step, which will bring another button or projection 69 beneath the finger 67 and cause the stop arm 64 to again move from beneath the lever 58. When this takes place, said lever 58 will again operate, thereby turning the abutment disk another step and bringing another set of abutment pins into the paths of the stop pins 51 and 53. As a consequence a second set of steps will be produced, reducing the width of the silk top and increasing the widths of the sole portions. This is repeated until the toe cap is to be produced, whereupon the carrier rods 14, 15 and 16 are thrown out of operation and the carrier rod 17 is thrown into action by well known means, the carrier rod 17 being operated sufficiently to cause the carrier 24 to traverse both the cotton sole portions and the intermediate silk top, at the same time producing the narrowing fingers and completing the toe cap.

By this apparatus a stocking foot can be produced in which the silk top 28 is extended well into the toe and materially beyond the ordinary toe cap. At the same time the side margins are reenforced by spliced or doubled threads of cotton and silk and as these portions are subjected to the wear of the toe they are of wear-resisting material. The stocking is peculiarly desirable for wear with low slippers or dancing pumps, inasmuch as the cotton portions are not exposed.

That the apparatus is adapted for other uses of a generally analogous character, will be obvious by reference to Figure 9, which illustrates an arrangement of parts for producing a spliced ornamentation on the front of a stocking leg. In this structure a series or set of reciprocating carrier rods are disclosed, two of which are designated respectively 83 and 84. The rods are operated from a reciprocatory friction shaft 85 having friction boxes 86 and 87 with arms respectively designated 88 and 89 that actuate the rods 83 and 84. One of these rods, as 84, is provided with a plurality of thread carriers 90 that operate in the usual manner across the different banks of needles to produce the silk stocking leg blanks 91. The other rod 83 is provided with carriers 92 that are adapted to lay in splicing or overlying threads for the production of the ornamentations. Thus in Figure 9, this ornamentation consists of a succession of diamond figures 93 with stepped margins 94. The pattern is determined by stepped abutment pins 95 mounted on abutment carrier disks 96 and movable into the path of stops 97 mounted on the carrier rod 83. The means for operating these disks 96 is the same as that above described, and it is believed needs no repetition. Obviously by the utilization of the successive abutment pins 95 the traverse of the carrier rod 83 and the carriers 92 is determined and said carriers increase their amount of movement successively until the maximum width of the design 93 is produced and the traverse is then successively decreased in steps to the minimum width.

It will be obvious that the apparatus may be modified in sundry ways to produce different designs on different portions of the knitted fabric or body. Inasmuch as the controlling or pattern determining means is directly associated with the carrier rods, great accuracy in the design is secured and this accuracy is further made more certain by the particular mounting of the abutment disks, these, as shown in Figure 6, bearing flat against the opposite sides of the relatively heavy supporting arm 41 and the abutment pins having bearings both against the disk and preferably against the arm 41, also, so that there is no "give" when the pins are struck by the stop pins of the rods.

From the foregoing, it is thought that the construction, operation and many advantages of the herein described invention will be apparent to those skilled in the art, without further description, and it will be understood that various changes in the size, shape, proportion and minor details of construction may be resorted to without departing from the spirit or sacrificing any of the advantages of the invention.

Having thus fully described my invention, what I claim as new, and desire to secure by Letters Patent, is:—

1. In a knitting machine, the combination with a reciprocatory carrier rod and a thread carrier moved thereby of a stop fixed to the

carrier rod, an abutment carrier movable transversely of the stop, and a plurality of abutments mounted on the abutment carrier and comprising stems engaged in the abutment carrier and enlarged heads abutted against the abutment carrier and movable into the path of the stop.

2. In a knitting machine, the combination with a reciprocatory carrier rod and a thread carrier moved thereby, of a stop fixed to the carrier rod, a rigid support located at one side of the rod, and abutment carrier movably mounted on the support against the side thereof in opposition to the stop, and a plurality of abutments comprising stems engaged in the abutment carrier and heads that are against the outer face of the carrier and movable with said carrier into the path of the stop.

3. In a knitting machine, the combination with a reciprocatory carrier rod and a thread carrier moved thereby, of a stop fixed to the carrier rod, a rigid support located at one side of the rod, an abutment carrier rotatably mounted on the support against the side thereof in opposition to the stop, and backed by said stop, and a plurality of abutments comprising stems engaged in the abutment carrier and heads that are against the outer face of the abutment carrier and movable upon the rotation of said carrier into the path of the stop.

4. In a knitting machine, the combination with a carrier rod and a thread carrier movable therewith, of a stop for the carrier rod, a plurality of abutments movable into and out of the path of the stop, means for moving the abutments, including a lever and a cam that engages the lever to operate it, a holding dog movable into and out of engagement with the lever to hold said lever out of coacting relation to the cam, an endless belt having means that periodically operates the dog, ratchet mechanism for operating the belt, including a lever actuated by the cam, and means on said belt for throwing the belt actuating mechanism out of action.

5. In a knitting machine, the combination with a plurality of reciprocatory carrier rods, and thread carriers moved thereby, of a rigid support located between the ends of the rods and at one side of the same, spaced rotary heads having their inner sides abutting against opposite sides of the support, abutments projecting from the outer sides of the heads, and stops fixed to the rods on opposite sides of the support and heads, said abutments being movable into the path of the stops on the rotation of the heads.

6. In a knitting machine, the combination with a plurality of reciprocatory carrier rods and thread carriers moved thereby, of a rigid supporting arm overhanging intermediate portions of the rods, heads journaled on opposite sides of the arm and backed thereby, abutments of different lengths projecting from the outer side faces of the heads, and stops fixed to the rods, said abutments being movable into and out of the paths of the stops on the rotation of the heads.

7. In a knitting machine, the combination with a carrier rod and a thread carrier movable therewith, of a stop fixed to the carrier rod, a plurality of abutments movable into and out of the path of the stop at respectively different points, an actuating lever for the abutments, a cam that operates on the lever to move it, and a holding dog movable into engagement with the lever to hold it in inactive relation to the cam.

8. In a knitting machine, the combination with a carrier rod and a thread carrier movable therewith, of a stop fixed to the carrier rod, a plurality of abutments movable into and out of the path of the stop at respectively different points, an actuating lever for the abutments, a cam that operates on the lever to move it, a holding dog movable into engagement with the lever to hold it in inactive relation to the cam, and automatic means for intermittently actuating the dog.

9. In a knitting machine, the combination with a carrier rod and a thread carrier movable therewith, of a stop fixed to the carrier rod, a plurality of abutments movable into and out of the path of the stop at respectively different points, an actuating lever for the abutments, a cam that operates on the lever to move it, a holding dog movable into engagement with the lever to hold it in inactive relation to the cam, and an endless belt having projections that intermittently operate the dog.

10. In a knitting machine, the combination with a carrier rod and a thread carrier movable therewith, of a stop fixed to the carrier rod, a plurality of abutments movable into and out of the path of the stop at respectively different points, an actuating lever for the abutments, a cam that operates on the lever to move it, a holding dog movable into engagement with the lever to hold it in inactive relation to the cam, an endless belt having projections that intermittently operate the dog, a pawl and ratchet for operating the belt, and means for periodically throwing the pawl out of action.

11. In a knitting machine, the combination with a plurality of longitudinally reciprocatory carrier rods, of thread carriers operated by the rods, a rotatable abutment carrier having sets of abutments, said sets being located at different distances from its axis of rotation, means that respectively engage against the abutments for stopping the different carrier rods in different positions, and means for rotating the abutment carrier to successively present different abutments to the different stop means.

12. In a knitting machine, the combination with a plurality of longitudinally reciprocatory carrier rods having stops, of thread carriers operated by the rods, a rotatable abutment carrier having sets of abutments located at different distances from its axis of rotation, said stops extending longitudinally of the axis of the carrier and being of different lengths, and means for rotating the abutment carrier to simultaneously place abutments of different lengths in the paths of the stops of the different carrier rods.

13. In a knitting machine, the combination with a plurality of longitudinally reciprocatory carrier rods having stops and thread carriers, of a rotatable abutment carrier located transversely thereto, a plurality of sets of abutments projecting from a face of the carrier at different distances from its axis of rotation and of different lengths, the abutments of one set being arranged in reverse order to the other set, and means for intermittently rotating the abutment carrier.

In testimony whereof, I affix my signature.

EDWARD OESTERREICH.

559

(No Model.) 15 Sheets—Sheet 1.

W. T. ROWLETT.

STRAIGHT KNITTING MACHINE.

No. 500,953. Patented July 4, 1893.

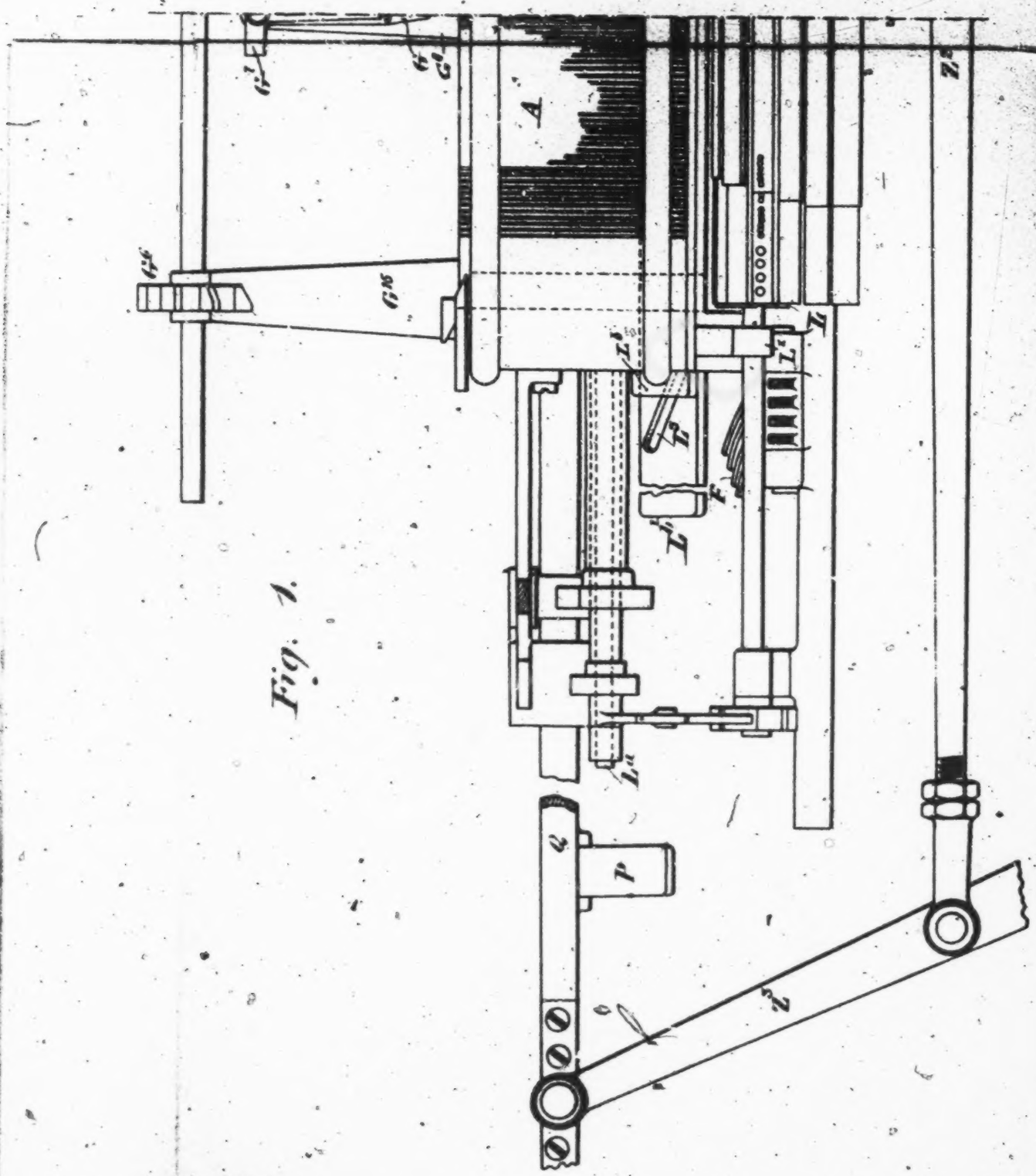

Fig. 1.

Witnesses.
George Dixon
Balthus D. Long

Inventor.
William Tertius Rowlett
By his attys.
Baldwin Davidson & Wright

560

(No Model.) 15 Sheets—Sheet 2.

W. T. ROWLETT.

STRAIGHT KNITTING MACHINE.

No. 500,953. Patented July 4, 1893.

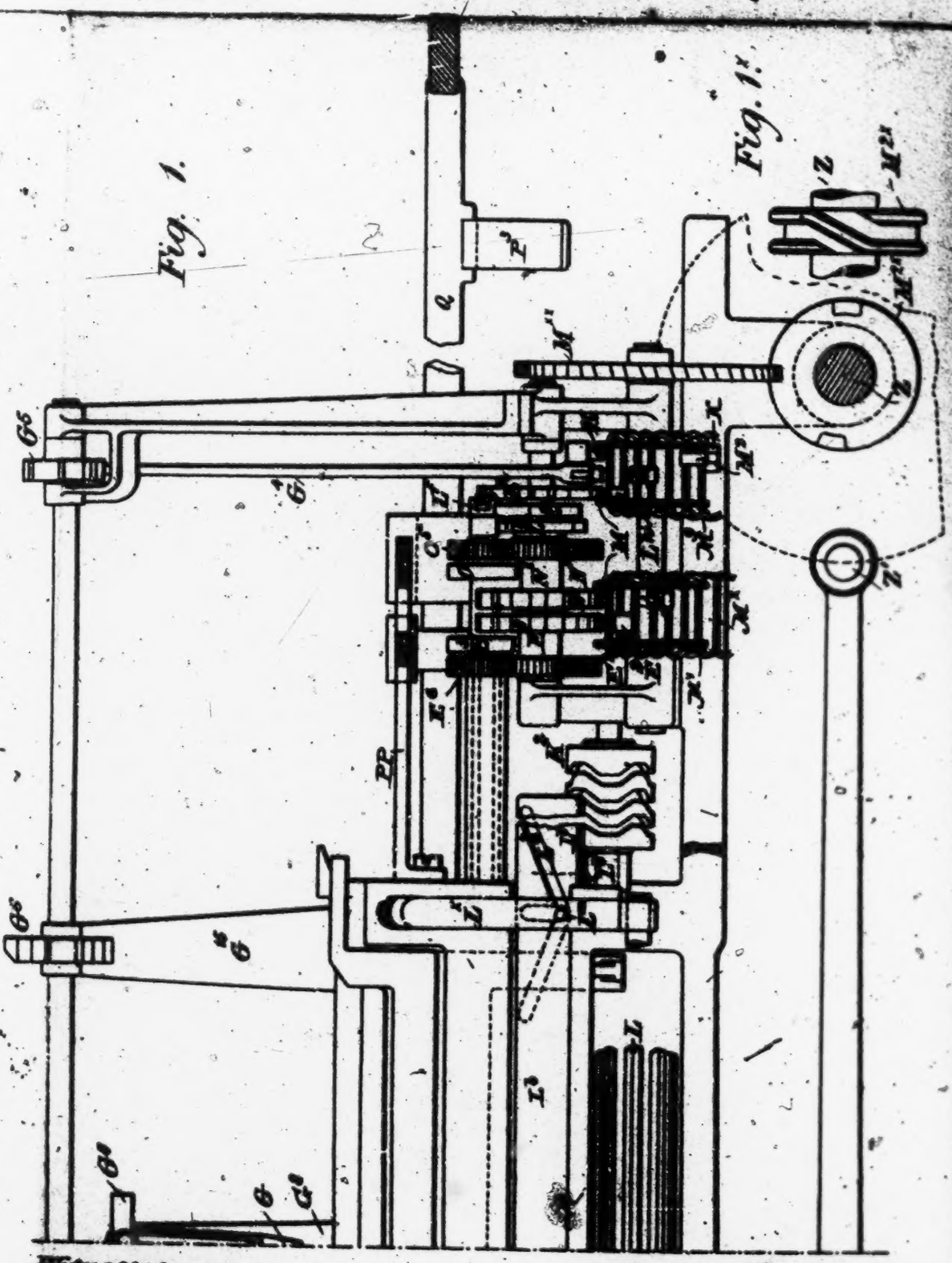

Witnesses,
George Dyer
Baltus DeLong.

Inventor.
William Luting Rowlett
by his Attys.
Baldwin Davidson & Wright

561

(No Model.) 15 Sheets—Sheet 3.

W. T. ROWLETT.

STRAIGHT KNITTING MACHINE.

No. 500,953. Patented July 4, 1893.

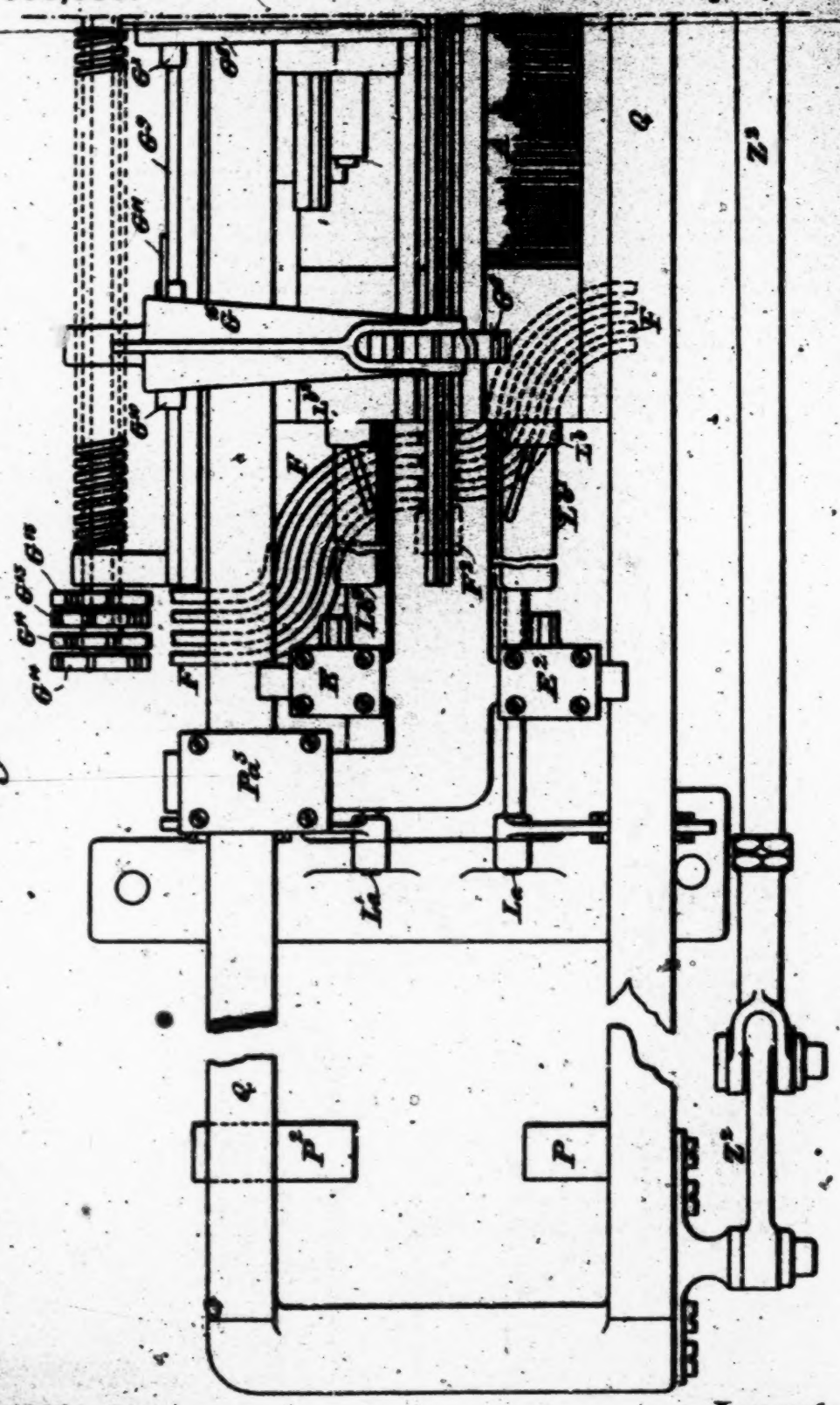

Fig. 2.

Witnesses
George Dixon
Walter D. Long

Inventor.
William Tertius Rowlett
By his Attys.
Baldwin Davidson & Wright

562

(No Model.) 15 Sheets—Sheet 4.

W. T. ROWLETT.

STRAIGHT KNITTING MACHINE.

No. 500,953. Patented July 4, 1893.

Fig. 2.

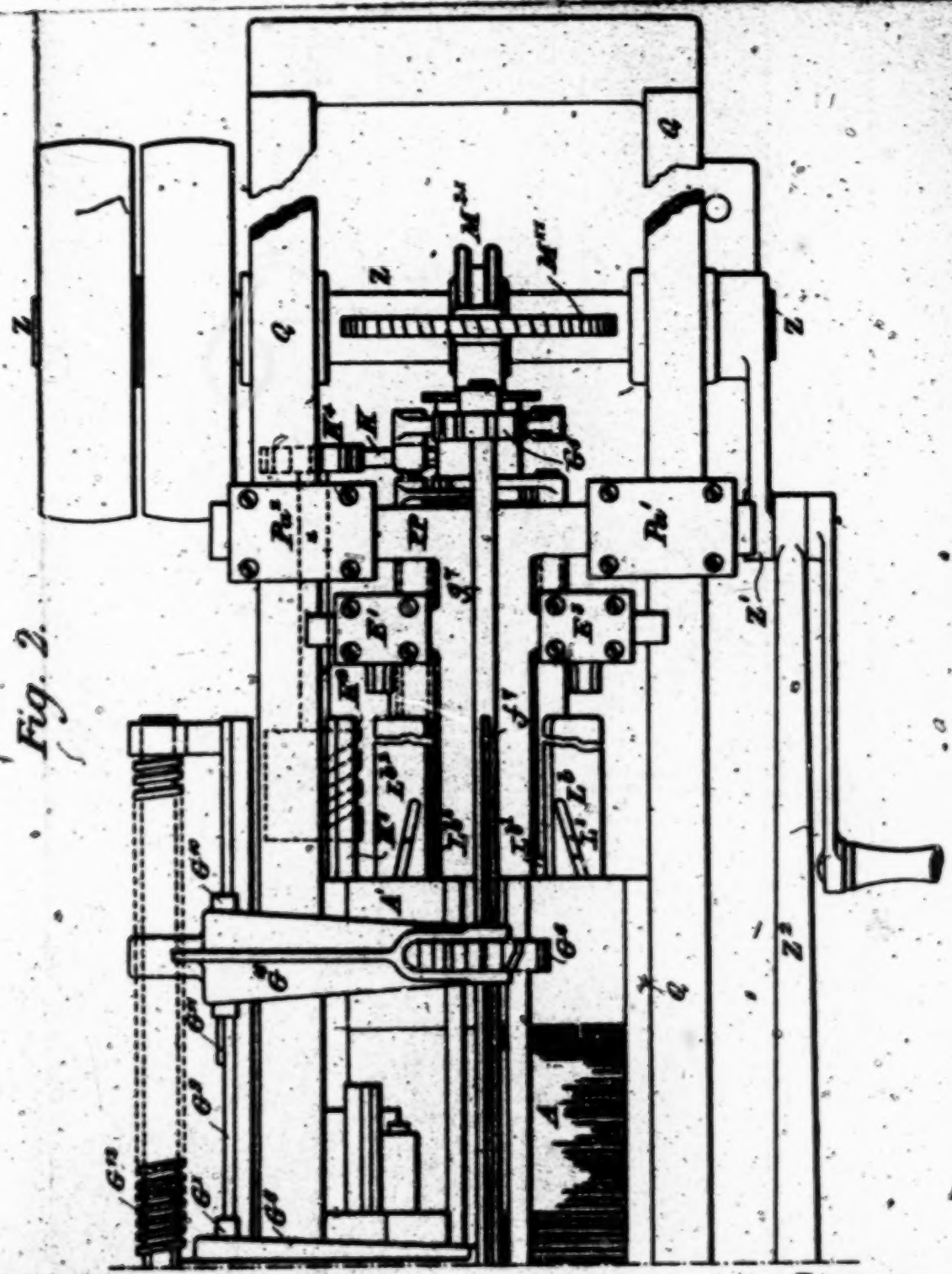

Witnesses
George E. Dixon
Walter D. Long.

Inventor:
William Tertius Rowlett
By his Attys
Baldwin Bowden & Wright

563

(No Model.) 15 Sheets—Sheet 5.

W. T. ROWLETT.

STRAIGHT KNITTING MACHINE.

No. 500,953. Patented July 4, 1893.

Fig. 3.

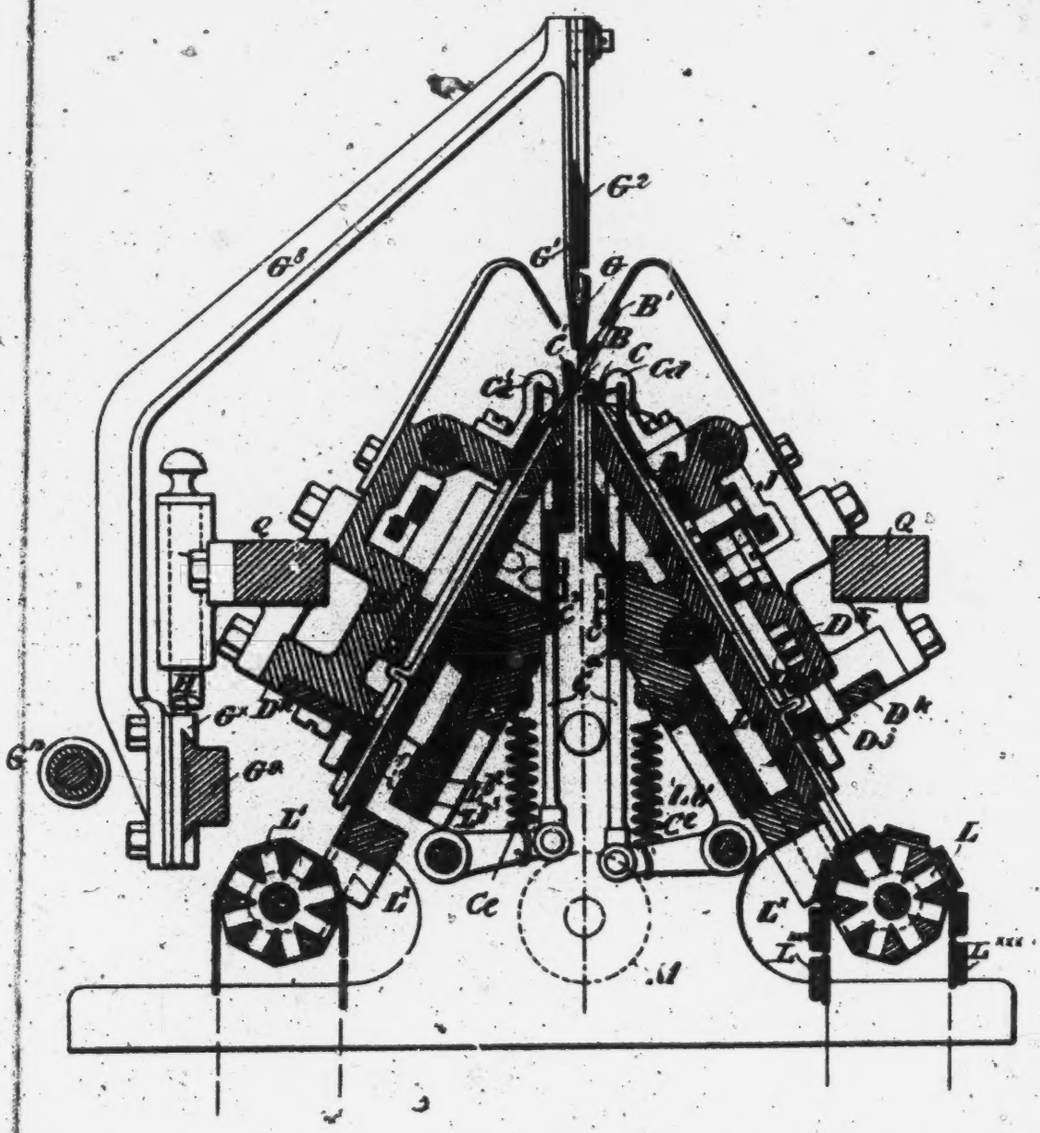

Witnesses.

Geo. G. Dixon

Baltus De Long

Inventor:

William Tertius Rowlett,

By his Atty's.

Baldwin Davidson & Wright

564

(No Model.) 15 Sheets—Sheet 6.

W. T. ROWLETT.

STRAIGHT KNITTING MACHINE.

No. 500,953. Patented July 4, 1893.

Fig. 2ª.

Fig. 3ª.

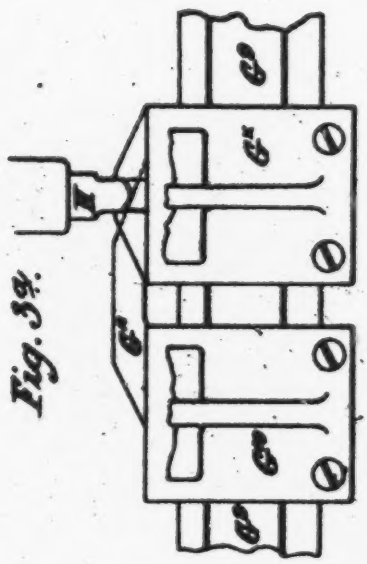

Fig. 3ª.

Witnesses.
A. W. Miller.
Walter D. Long

Inventor.
William T. Rowlett
By his Attorneys
Baldwin Davidson & Wright

565

(No Model.) 15 Sheets—Sheet 7.

W. T. ROWLETT.

STRAIGHT KNITTING MACHINE.

No. 500,953. Patented July 4, 1893.

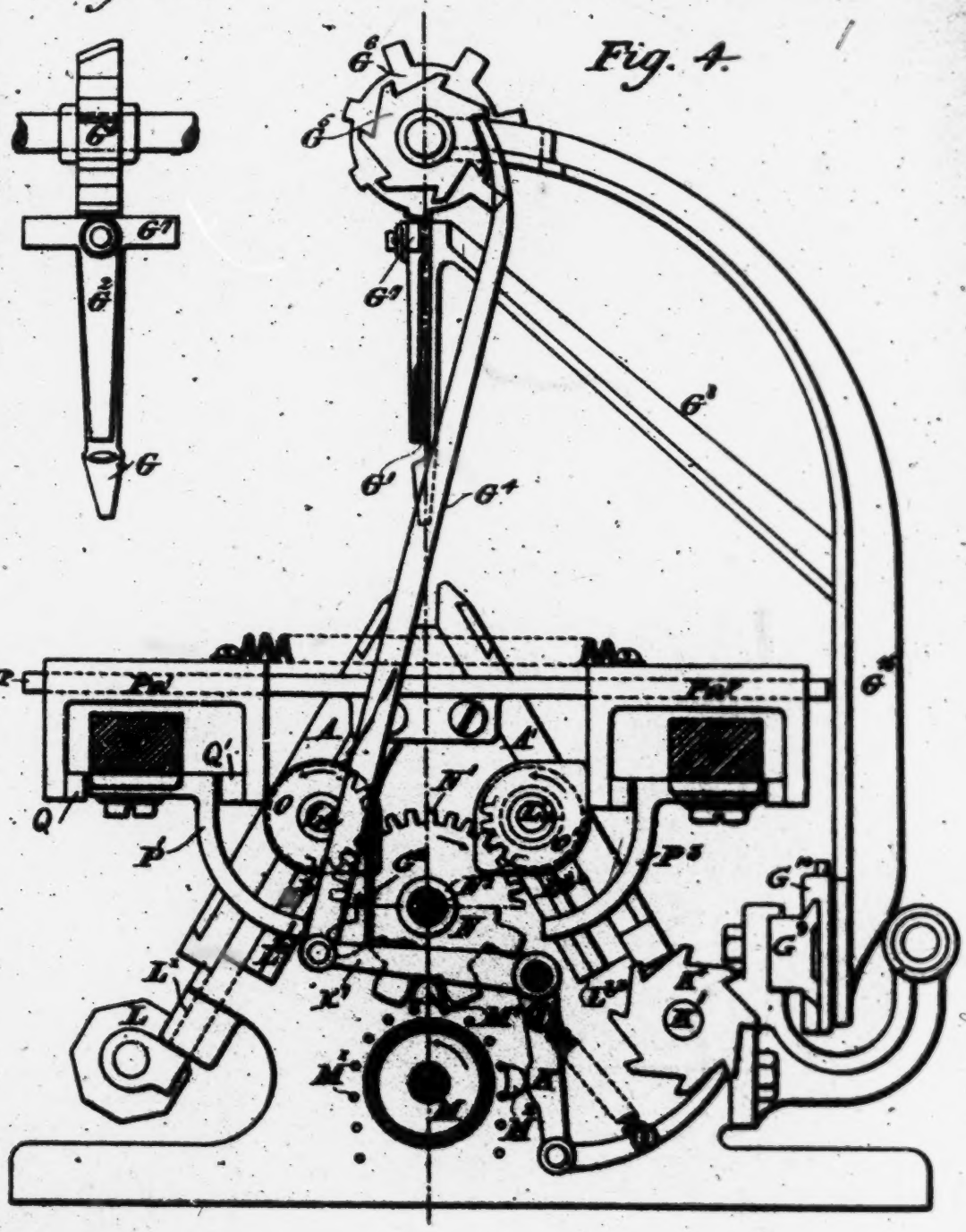

Witnesses.

Geo. G. Dixon

Baltus De Long.

Inventor.

William Tertius Rowlett

By his Attys

Baldwin Davidson & Wight

566

(No Model.) 15 Sheets—Sheet 8.

W. T. ROWLETT.

STRAIGHT KNITTING MACHINE.

No. 500,953. Patented July 4, 1893.

Fig. 4a.

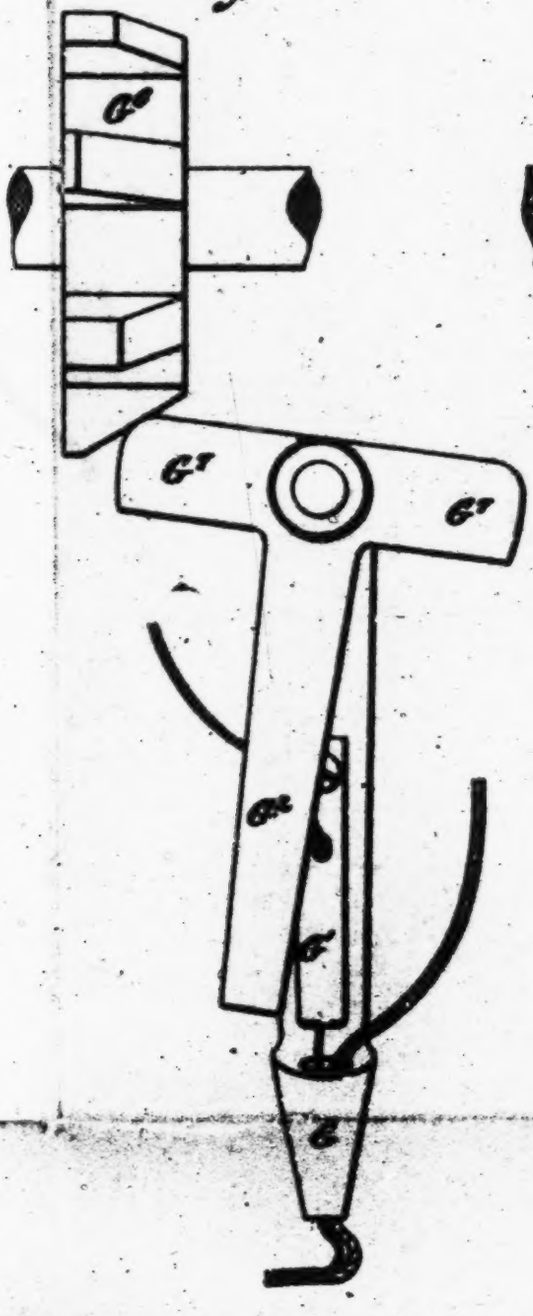

Fig. 4b.

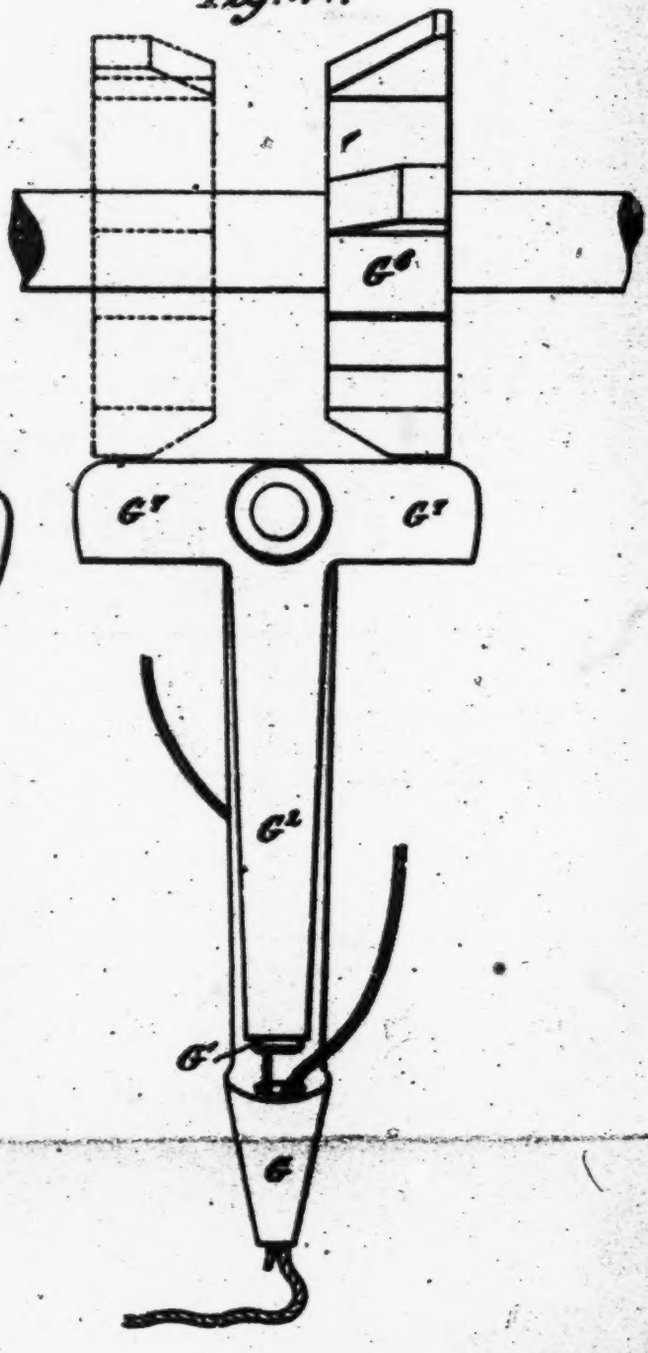

Witnesses.
B. F. Miller.
Baldwin & Long

Inventor.
William T. Rowlett,
By his Attorneys
Baldwin Davidson & Wright

567

(No Model.) 15 Sheets—Sheet 9.

W. T. ROWLETT.

STRAIGHT KNITTING MACHINE.

No. 500,953. Patented July 4, 1893.

Fig. 4c.

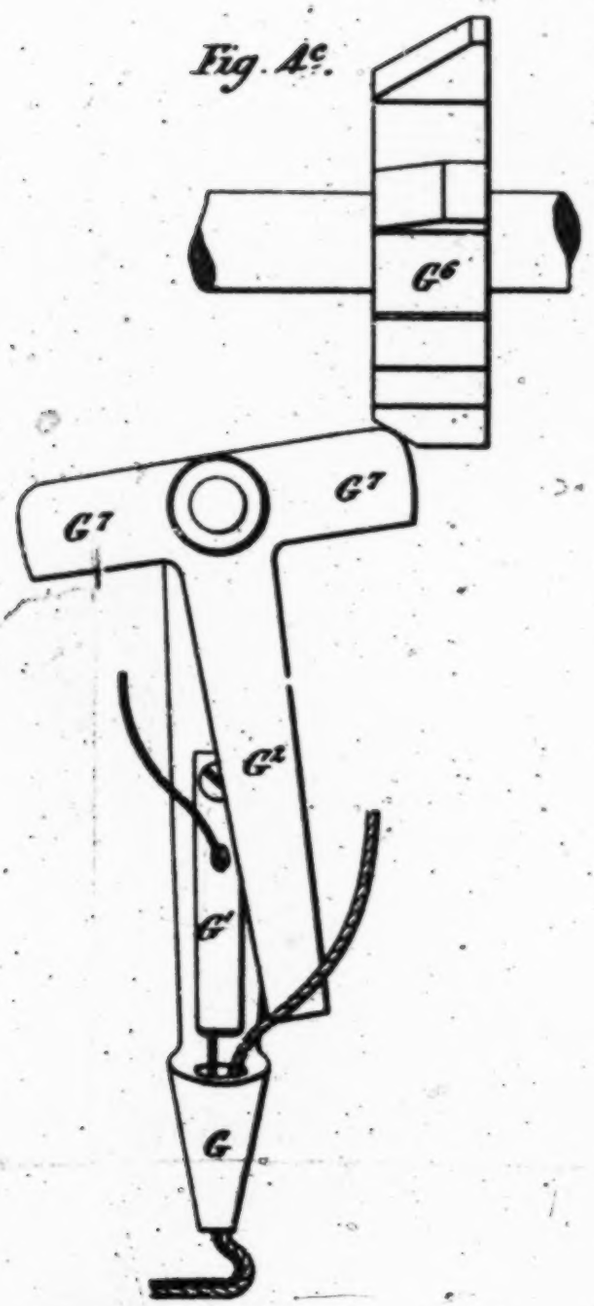

Fig. 4d.

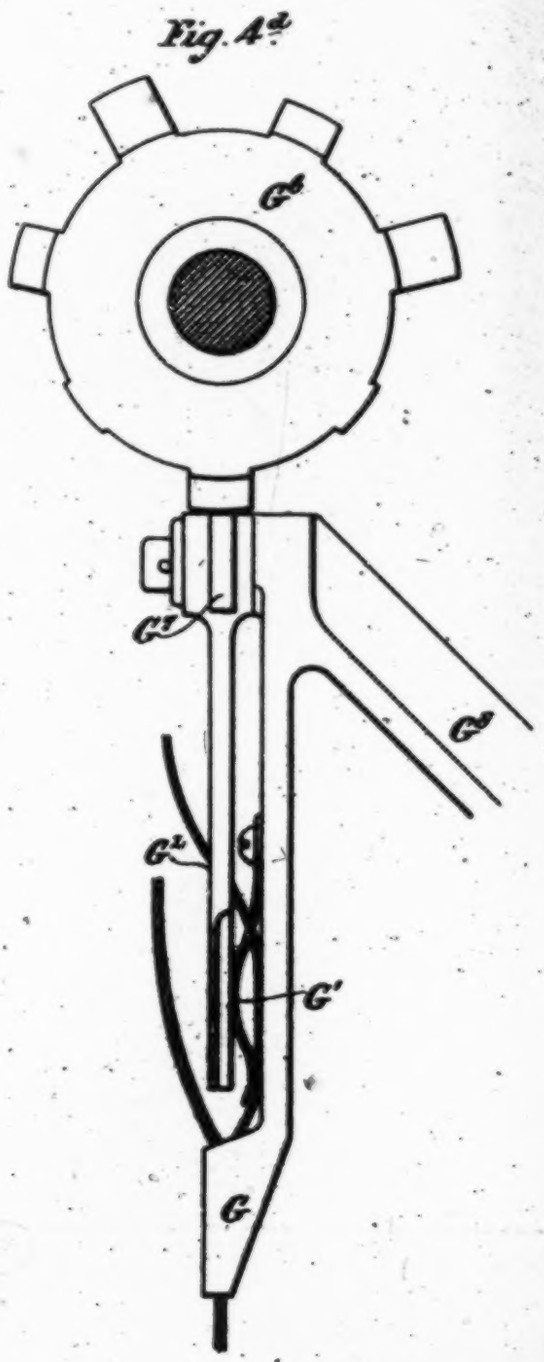

Witnesses.
B. F. Hillen
Baltus & Long

Inventor.
William T. Rowlett
By his Attorneys
Baldwin, Davidson & Wright

(No Model.) 15 Sheets—Sheet 10.

W. T. ROWLETT.

STRAIGHT KNITTING MACHINE.

No. 500,953. Patented July 4, 1893.

Fig. 5x

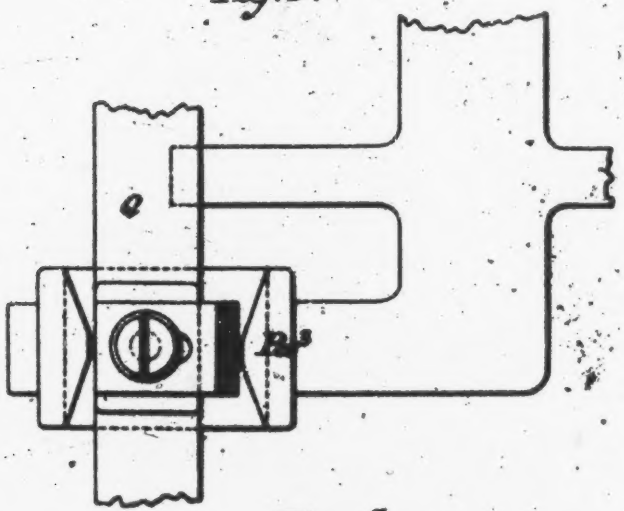

Fig. 5.

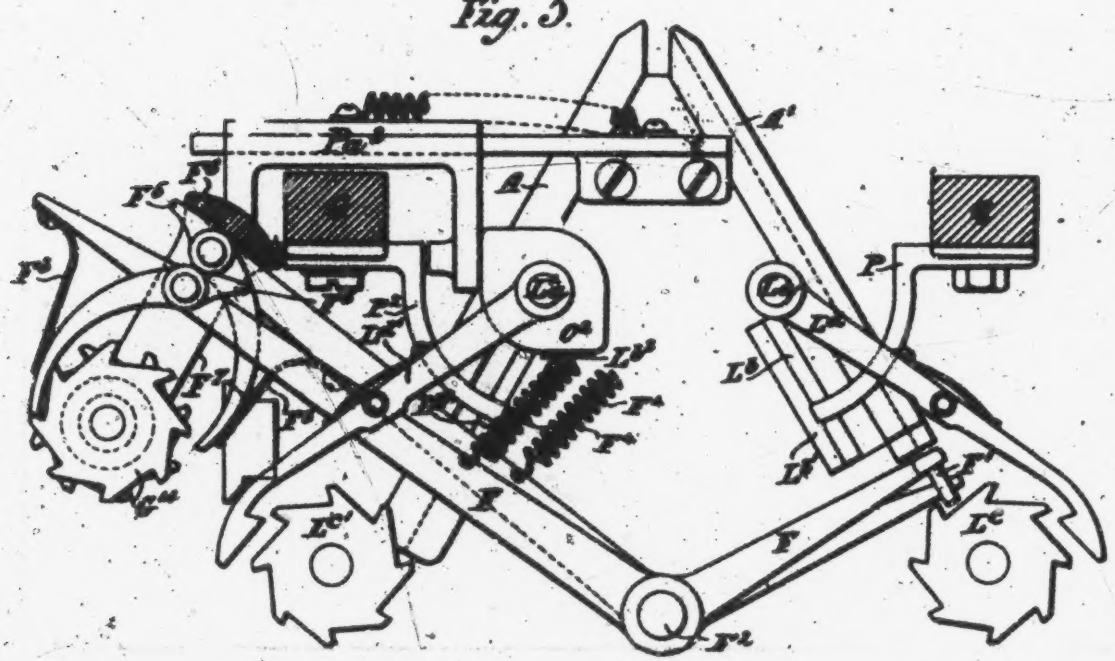

Witnesses.
B. W. Miller
C. W. Brooke

Inventor.
William T. Rowlett,
By his Attorneys
Baldwin, Davidson & Wight.

(No Model.) 15 Sheets—Sheet 11.

W. T. ROWLETT.

STRAIGHT KNITTING MACHINE.

No. 500,953. Patented July 4, 1893.

Fig. 6.

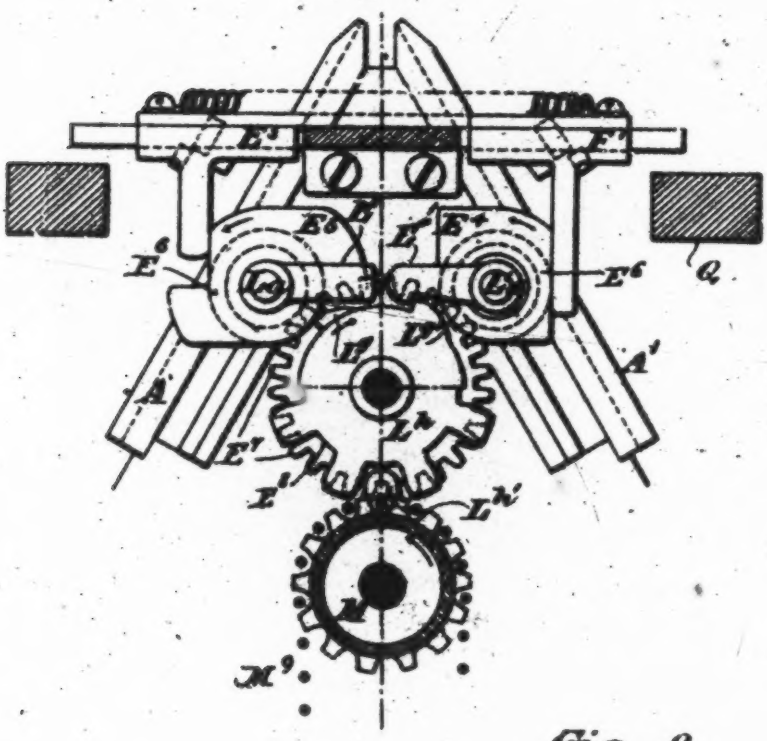

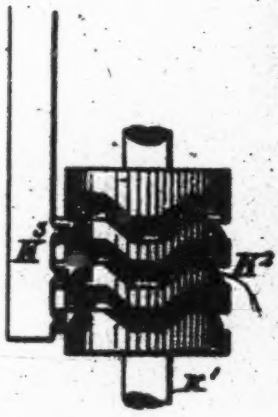

Fig. 7.

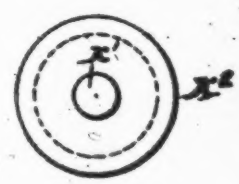

Fig. 8.

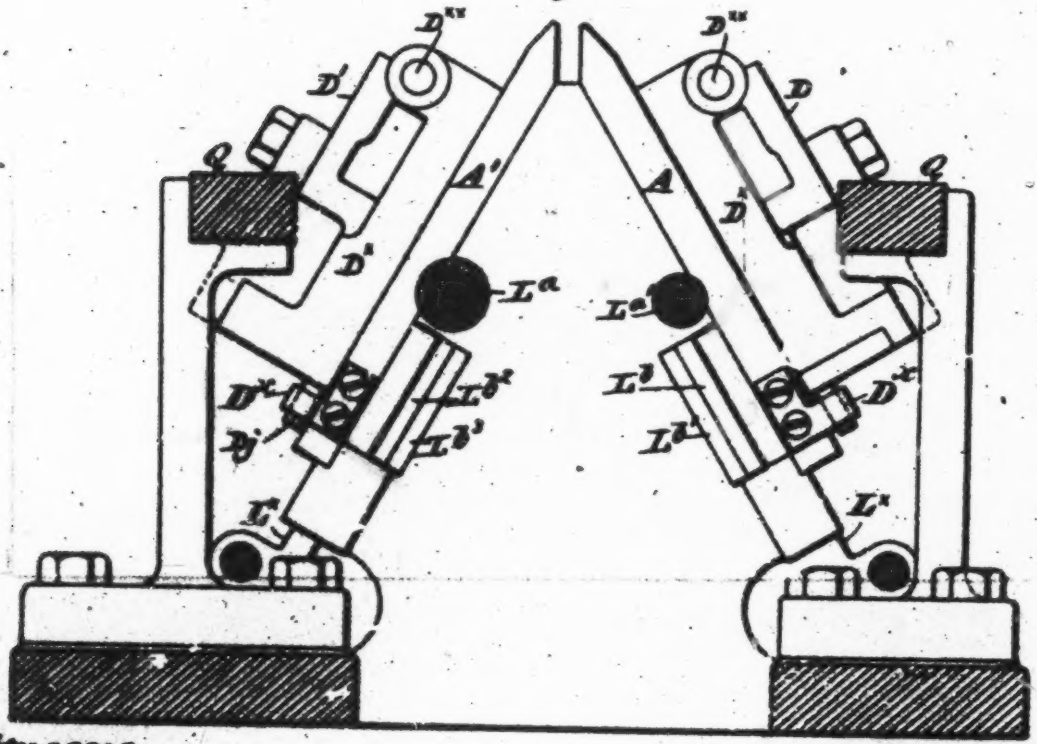

Witnesses.
George Dixon
Baltus DeLong

Inventor.
William Tertius Rowlett.
By his Attys.
Baldwin Davidson & Wright

570

(No Model.) 15 Sheets—Sheet 12.

W. T. ROWLETT.

STRAIGHT KNITTING MACHINE.

No. 500,953. Patented July 4, 1893.

Fig. 9.

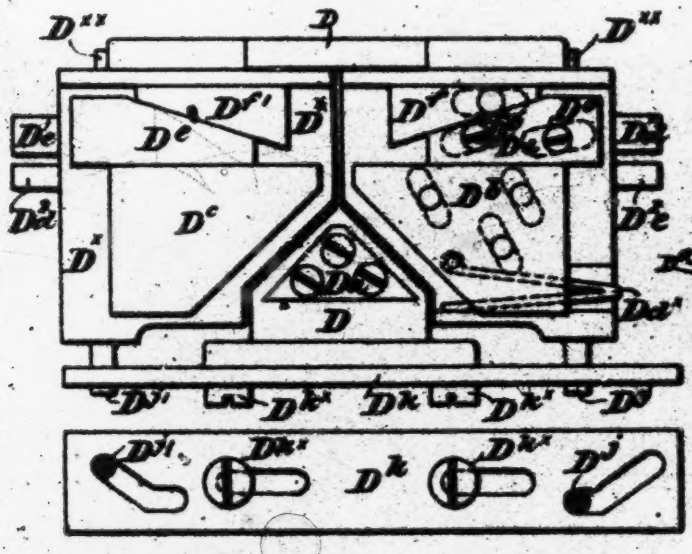

Fig. 13. Fig. 14.

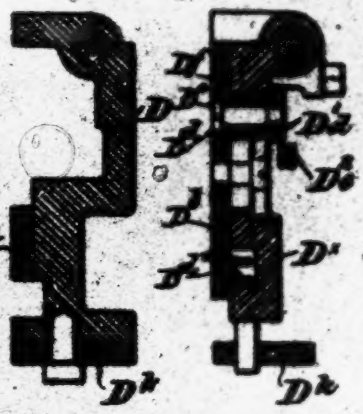

Fig. 10.

Fig. 11.

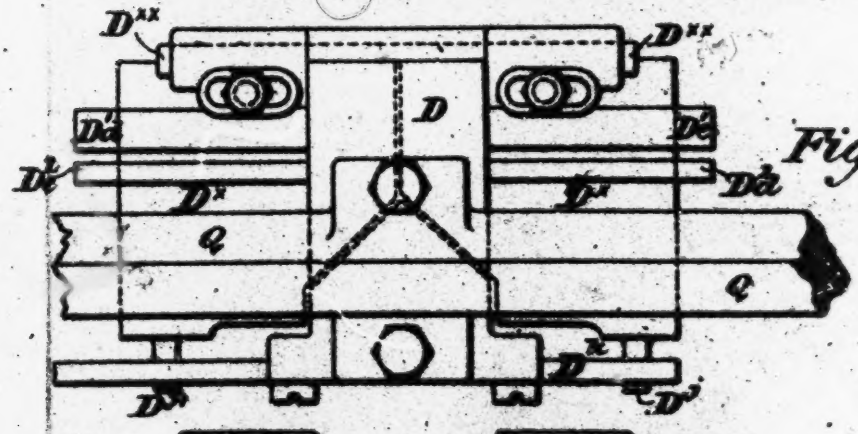

Fig. 12.

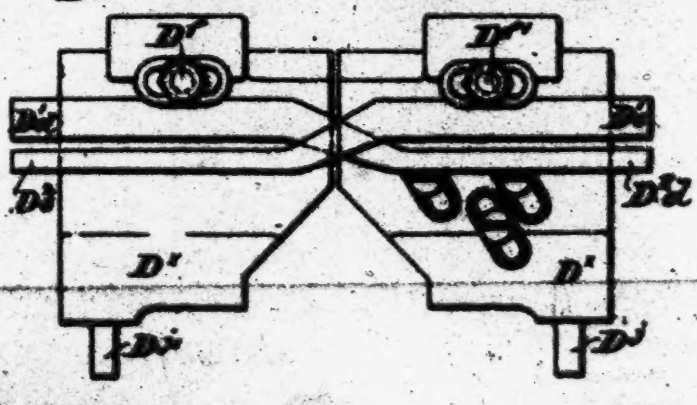

Witnesses.

[illegible]

Balthus Dr Long

Inventor.

William Tertius Rowlett

By his Attys

Baldwin Davidson & Wright

571

(No Model.) 15 Sheets—Sheet 13.

W. T. ROWLETT.

STRAIGHT KNITTING MACHINE.

No. 500,953. Patented July 4, 1893.

Fig. 15.

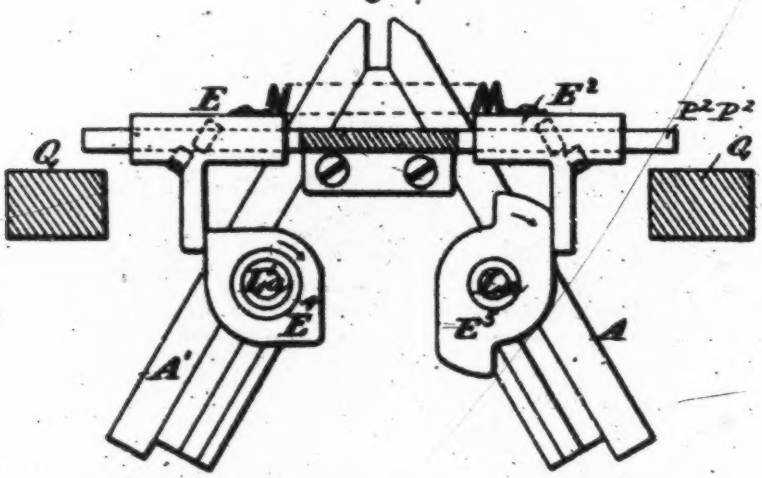

Fig. 16.

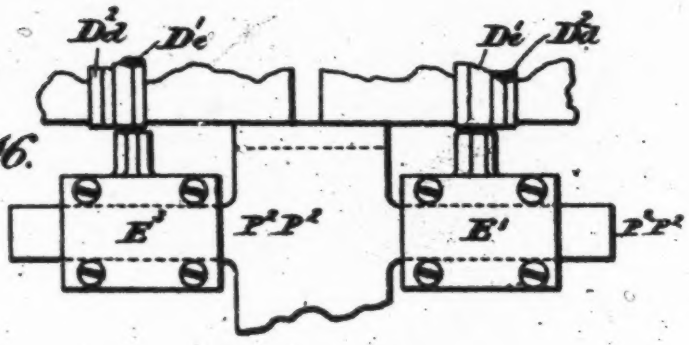

Witnesses.

Geo. G. Dixon

Balthis Dr. Long

Inventor.

William Tetius Rowlett.

By his Att'ys.

Baldwin Davidson & Wright.

572

(No Model.) 15 Sheets—Sheet 14.

W. T. ROWLETT.

STRAIGHT KNITTING MACHINE.

No. 500,953. Patented July 4, 1893.

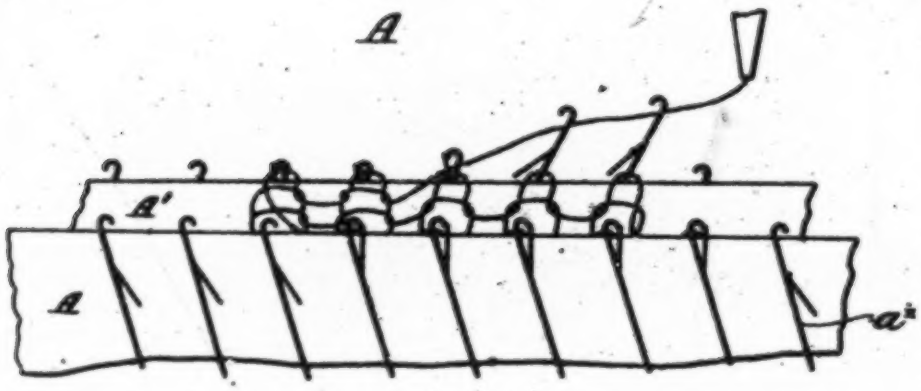

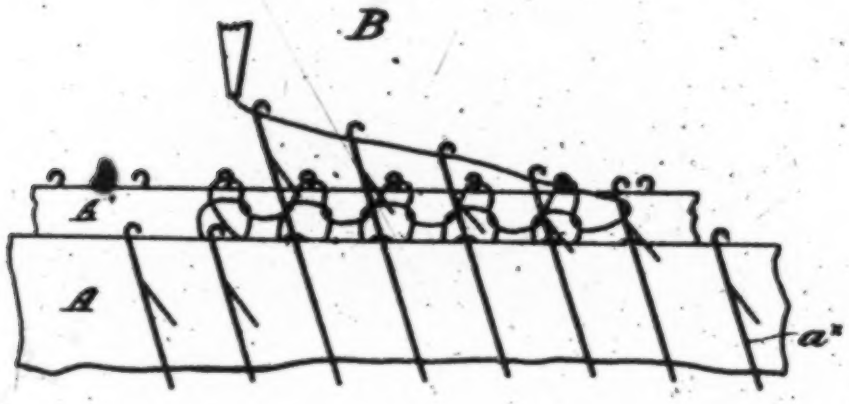

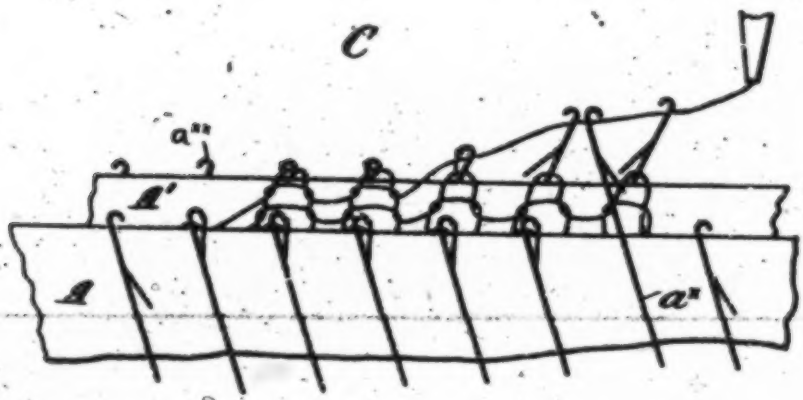

Witnesses
B. W. Miller
C. M. Brooke

Inventor
William T. Rowlett.
By his Attorneys
Baldwin Davidson & Wright

573

(No Model.) 15 Sheets—Sheet 15.

W. T. ROWLETT.

STRAIGHT KNITTING MACHINE.

No. 500,953. Patented July 4, 1893.

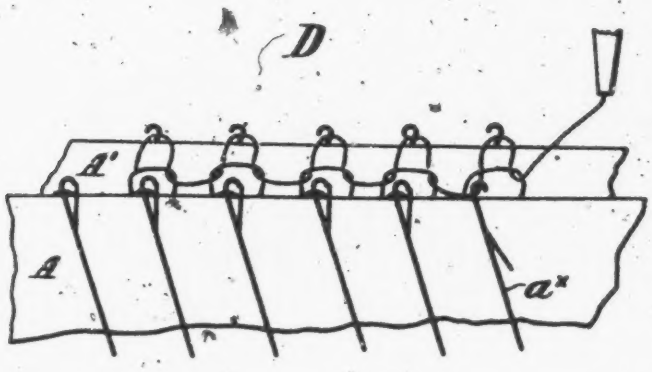

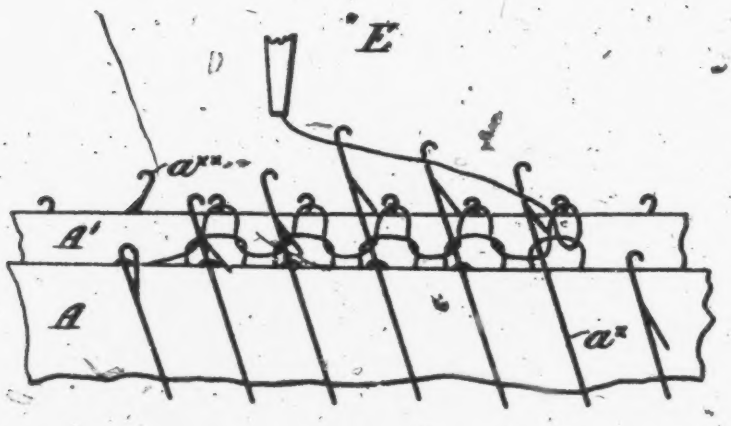

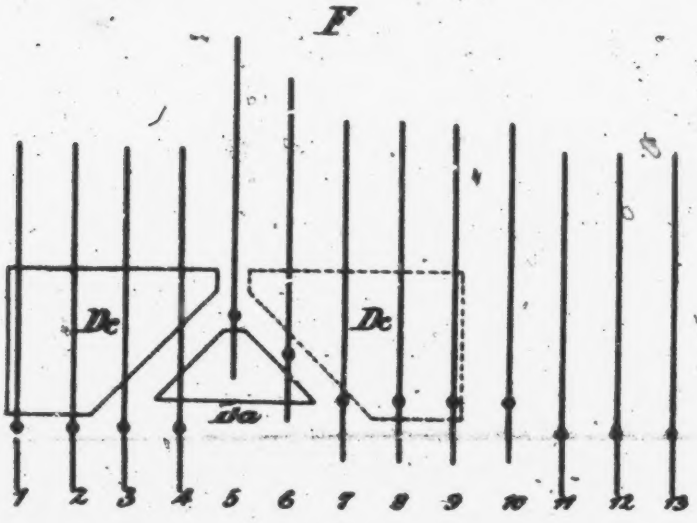

Witnesses.
B. W. Miller.
C. M. Burke

Inventor.
William T. Rowlett.
By his Attorneys
Baldwin Davison & Wright

148
85796
US 2
Part 2

UNITED STATES PATENT OFFICE.

WILLIAM TERTIUS ROWLETT, OF LEICESTER, ENGLAND.

STRAIGHT-KNITTING MACHINE.

SPECIFICATION forming part of Letters Patent No. 500,958, dated July 4, 1893.

Application filed July 11, 1892. Serial No. 439,637. (No model.) Patented in England August 1, 1891, No. 13,126, and in France June 30, 1892, No. 222,711.

To all whom it may concern:

Be it known that I, WILLIAM TERTIUS ROWLETT, yarn merchant, a subject of the Queen of Great Britain, residing at 34 Newarke Street, Leicester, England, have invented certain new and useful Improvements in Straight-Knitting Machines, (for which I have received Letters Patent in Great Britain, No. 13,126, dated August 1, 1891, and in France, No. 222,711, dated June 30, 1892,) of which the following is a specification.

My invention relates to latch needle knitting machines formed with two parallel needle beds either straight or curved and adapted to produce tubular work as in the Lamb knitting machines. When making tubular work on such machines a course of work is first made along the needles of one bed and then with the same thread a course of work is produced along the needles of the other and so on, as is well understood. Machines of this kind have also before been constructed in such a manner that the down-throw cams used for lowering the needles bring the needles too low for them to be again raised by the up-throw cam, unless they have been previously raised a distance by the action of Jacquard cards brought against them. No fashionings could be produced automatically on such machines without small holes being left in the work wherever the widenings were made.

The main object of my invention is so to construct such machines that fashioned work may be automatically produced upon them without holes being left in the work at the points where the widenings are made. Whenever a widening is to be made, a new needle is brought up into working position at the end of one row or the other of needles previously in work. In order that a hole may not be produced in the work by the bringing in of this needle, I, according to my invention, cause the last sinker loop of the work on the opposite row of needles to be stretched or placed automatically on this needle before any work is made upon it. I do this by making one of the needle beds capable of being shifted endwise to and fro a short distance and by then causing the needle which is to be brought into work to come forward and take the loop at the proper time, as illustrated by the diagrams A, B, C. The action is illustrated in the diagram perspective views A, B, C, D, E, as seen from the front of the machine. Diagrams A and B show how tubular work is made in the ordinary way, a course of work being first produced upon one bed of needles A, and then with the same thread a course of work on the other bed of needles A′, and so on. Diagram A, shows work being produced upon a few of the back needles and B, shows work being produced on a few of the front needles. Diagrams C, D and E, show how a widening is made without allowing any hole to be formed in the work. Diagram C, shows the back bed A′ shogged to the right and the needle $a^{\times}$, which is to be brought into work, raised between the last two needles of the bed A′, which have work upon them. Diagram D shows how the needle $a^{\times}$ has thus been made to take the sinker loop between these last two needles. Diagram E shows the next course of work upon the front bed just being commenced. Diagram F shows how the cams raise and subsequently lower only such needles as have been previously raised a short distance by the action of the jacquard. The dots represent projections on the needle stems which the cams act upon. Da is the up-throw cam and Dc a down-throw cam. The needles 5 to 10 are shown to have been raised a short distance by the jacquard so that when the cams Da Dc travel to the right, they get farther raised by the up-throw cam Da and then subsequently lowered by the down-throw cam Dc to such a position that they cannot subsequently be acted on by the up-throw cam when it moves in the opposite direction unless they are first again slightly raised by the action of the jacquard.

In Figures 1 to 16 I have shown my invention applied to what is known as a Lamb machine which has two straight needle beds and is so constructed that either a piece of ribbed work or a tubular fabric of plain work can be produced upon it. Fig. 1 the right and left hand halves of which are shown on Sheets 1 and 2 is a side elevation partly in section of the machine. Fig. $1^{\times}$ is an edge view of cam $M^{1\times}$. Fig. 2 the two halves of which are shown on

Sheets 3 and 4 is a plan view: Fig. 2× is a longitudinal section of the screws G¹³, and the spindles which carry them. Fig. 3 is a transverse section on a larger scale of the needle beds and the cams and Jacquard barrels which operate the needle. Fig. 3ª is a side elevation of part of bar G⁹, and bolt H, as well as the slide G× and incline G″, and Fig. 3ᵇ is a side view of the inclines *Cd*. Fig. 4 is a right hand end view. Fig. 4× is a front elevation of some of the parts shown in Fig. 4. Figs. 4ª, 4ᵇ, 4ᶜ and 4ᵈ show the way in which the splicing thread is broken or allowed to pass into the work with the other thread. Fig. 5 is a transverse section showing the ratchet wheels and pawls by which the Jacquard barrels are turned and the ratchet wheel and pawls used for turning the screw shaft by which the position of the stops used for limiting the throw of the thread carrier is controlled. Fig. 5× is an under side view partly in section of a portion of what is shown in Fig. 5. Fig. 6 is a transverse section showing the parts used for putting the pawls which turn the Jacquard barrels in or out of action. Fig. 7 shows a top view and an end view of the cam used for shogging the movable needle bed to and fro. Fig. 8 is a cross section of the machine showing the form of the frame and the supports for the reciprocating frame by which the cam boxes are carried. Fig. 9 is an under side view of one of the sets of cams. Fig. 10 is a face view of one of the slides by which the downthrow cams are put in and out of action. Fig. 11 is a plan view of the cams and of a portion of the frame Q by which they are carried. Fig. 12 is a plan view of the two downthrow cams and of the two bars by which these cams are raised and lowered to produce slack and tight courses. Figs. 13 and 14 are vertical sections of what is shown in Fig. 9. Fig. 15 is a transverse section showing control cams and sliding stops at the left hand end of machine for controlling the stiffening of the work. Fig. 16 is a plan of part of the same.

In Figs. 1 to 16, Z is the main driving shaft which by crank pin Z′ connecting rod Z² and lever Z³ whose fulcrum pin can rise and fall gives a to and fro horizontal motion to a horizontal frame Q.

A is the front needle bed and A′ the back needle bed which is capable of being shogged endwise.

B are the needles of the front bed and B′ the needles of the back bed.

C are the web holders of the front bed and C′ the web holders of the back bed.

D is a plate carrying the cams of the front bed and D′ a plate carrying the cams of the back bed. These are bolted to short arms that stand out from the opposite side bars of the frame Q.

All variations of the letter D refer to various working parts of the cams.

G is the thread carrier carried by a slide G× which can be slid to and fro along a fixed bar G⁹.

G′ is a spring carrying a splicing thread.

G⁴ is a lever for cutting off and releasing the splicing thread.

H is a spring actuated bolt carried by the frame Q. It is pressed downward by a spring so that its lower end may engage with projections which stand up from the slide G× and carry the slide along with it until the bolt is raised and put out of action by inclines G″ (see Figs. 2 and 3ª).

K K′ K² K³ are parts for shogging the back needle bed A′.

L is the Jacquard barrel working with the front bed and L′ the barrel working with the back bed. M denotes barrels with pattern chains for controlling the working of all the parts.

Various views of the cams used for raising and lowering the needles are shown at Figs. 9 to 14.

Da is the upthrow cam secured rigidly to the plate D which as before stated and as is shown at Figs. 8 and 11 is bolted to the frame Q.

D× D× are plates hinged by the joint pin D×× to the plate D one on either side of it. Each plate carries a downthrow cam one marked *Db* and the other marked *Dc*.

Dk is a bar which by screws *Dk*× is held to the end of the plate D the screws passing through slots so that the bar can be slid a distance endwise to and fro. In it are two slots inclined in opposite directions. Into one enters a pin *Dj* which projects out from one plate D× and into the other enters a pin *Dj*′ which projects out from the other plate. In this way when the bar is moved endwise one plate is raised and the downthrow cam carried by it put out of action while the other plate is lowered and the downthrow cam carried by it brought into action. This endwise to and fro motion is given to the bar *Dk* by fixed stops *Dx* (see Fig. 8 Sheet 8) against which the ends of the bar strike at the end of each movement of the main slide Q. In this way the downthrow or stitch cam which was in action when the slide Q was moving in one direction is put out of action before the slide commences to move in the opposite and the other downthrow cam is brought into acting position. As will be seen by Fig. 9 the downthrow cams extend downward some distance beyond the bottom of the upthrow cam so that when the needles have been lowered by either of the downthrow cams they cannot be caught by the upthrow cam without being previously raised a distance.

The raising of the needles into a position for them to be caught by the upthrow cams is effected by Jacquard cards supported on Jacquard barrels L, L′. If when a card is brought against the needles there are holes in it opposite to the ends of any of the needles then those needles remain unraised by the card and are not caught by the upthrow

cam but the others are raised to a sufficient height for the upthrow cam to act upon and further raise them.

The axes of the Jacquard barrels are supported by bars L^{x} which can be slid up and down in guide grooves formed in the fixed frame at the back of the needle beds. From the back of the bar projects a pin L^{xx}. See right hand half of Fig. 1. This enters slots L^{3} cut in two of the plates *Lb*, *Lb'*, Lb^{2}, and Lb^{3} there being two of these plates situated at the back of each needle bed. When one of the two plates is struck endwise in one direction the Jacquard barrel will be drawn upward toward the lower ends of the needle stems and when the plate moves in the opposite direction the barrel is moved away from them. Normally the Jacquard barrels are away from the needles and the portions of the slots in the bars *Lb*, *Lb'*, and Lb^{2} and Lb^{3} which are parallel with the bars L^{x} are then one over the other and the barrel can be raised to the needles by either bar being struck endwise.

To strike the bars endwise and raise and lower the Jacquard barrels, stops P P' P^{2} P^{3} on the sliding frame Q are used. When by the movement of the sliding frame Q, one of the stops is brought against one of the bars, the bar is moved endwise and the Jacquard barrel is raised. When the frame Q, is moved in the opposite direction, the Jacquard barrel is drawn back from the needles by its own weight and carries the bar back to its former position. One stop P is fixed to the frame Q as it is always required to be in action because when P moves toward the end of the bar *Lb'*, the next course of work to be made is always upon the front needles whatever part of a stocking is being made, whether the toe or heel or leg; the front Jacquard barrel, therefore must at this time always be raised against the front needles; the others can be slid inward or outward a short distance in guides on the frame so that they may either come against the ends of the bars *Lb*, Lb^{2}, or Lb^{3} or not come against them.

If tubular work is being made and the frame Q, is being moved in a direction to bring P against the bar *Lb'*, the front Jacquard barrel is raised and the next course is made along the front needles; during this next course P^{2} comes against Lb^{2}, and lifts the back Jacquard barrel and the next course is made along the back needles; the other stops P' P^{2} are kept out of action. When a widening is to be made, say when a course of work is about to be made on the front needles, not only is the front Jacquard barrel brought up to its needles, as above explained, but also the back Jacquard barrel by reason of one or other of the bars Lb^{2}, Lb^{3}, being then struck by one or other of the stops P^{2}, P^{3}. The Jacquard card then brought up to the back needles by the back barrel is so pierced that only the new needle which is to be brought into work is raised into position to be caught by the upthrow cam and consequently at the end of the course it is only this needle of the back needle bed which takes the thread laid on to the front needles. When work is to be made on the front bed of needles, only, as for example when making the heel, both of the stops P^{2}, P^{3} are kept out of action, so that the back Jacquard barrel remains down and out of action.

The movement of the stops P' P^{2} P^{3} is controlled by inclines on three slides *Pa'* Pa^{2} Pa^{3} which can be slid transversely of the machine along horizontal arms P P fixed to the frame of the machine. They can be slid upward by the action of cams O O' O^{2} and are drawn inward by the action of springs as shown in Figs. 4 and 5.

It will be seen that the cam O differs in shape from the cams O' O^{2}. This is so that when the two latter have thrown the stops Pa^{2}, Pa^{3}, out of work P and P' remain in position so as to actuate the jacquard of the front bed every time when making the heel. In this way each Jacquard barrel will be drawn up to the needles at each alternate endwise movement of the frame Q, while when making the heel the jacquard of the front bed will be drawn up to the needles at every movement. Each time that the Jacquard barrels recede from the needles they are turned a distance by pawls *Ld* *Ld'* acting on ratchet wheels *Lc* *Lc'* fixed on the axes of the barrels. If however the pawls be held up out of the way of the ratchet wheels then the barrels remain unturned.

In making a straight tube continuously of the same width as for the straight portions of a stocking it is obvious that the same cards on the jacquard may operate every time so as to bring the same number of needles into action. This is done by causing the pawls to be lifted out of action. The pawls are on the ends of spindles *La* *La'* passing through the spindles carrying the cams which control the stiffening of the work. At the other ends of the spindles are two arms *Lf* *Lf'* which are raised by the action of two cams *Lg* *Lg'* (see Fig. 6) turned by a large cog wheel *Lh* half of which is cut away to allow of the cams being shown. The cog wheel has a partial turn given to it at the proper time by studs *Lh'* on a pattern chain M^{3} carried by the barrel M. The pawls are put out of work by being raised by the action of springs or weights and when they are to be brought into work they are held down by the action of cams *Lg*, *Lg'*.

The cams O O' O^{2} have a quarter turn given to them at the proper times by the action of pins on a pattern chain in the following manner: On the shafts which carry the cams are pinions O^{5} which gear with a toothed wheel N' on a sleeve N^{x} on which is also a wheel N having larger teeth. In Fig. 4 half this wheel is cut away to show the toothed wheel N' behind it. M^{x} is an endless pattern chain passing around a barrel M to which a step by step revolving motion is given. M' is a stud on the

pattern chain. When the chain is moved and a stud M′ comes against one of the teeth of the wheel N it turns this wheel a distance of one tooth. The step by step revolving motion is given to the barrel M by a worm wheel M^{xx} on its axis having gearing with it a worm M^{3x} on the main driving shaft Z of the machine. The greater part of the worm thread is at right angles to the axis and gives no movement to the worm wheel but at two opposite points is sharply inclined to the axis as shown at Fig. 1^{x} so as when these portions engage with the worm wheel they give to it a quick partial turn.

In making the two first rib courses at the toe of the stocking and also on the side wherever a new needle is brought into work it is desirable to make the fabric stiffer. Provision is therefore made for automatically setting the downthrow or stitch cams higher or lower according to the length of loop that is to be drawn down by the needles. This is done in the following manner: The cam D*b* is pressed upward by a spring Dd^{x} against a wedge D*d* which itself rests against a fixed corresponding wedge D*f*. By moving the wedge D*d* toward the wedge D*f* the cam D*b* is set lower while by drawing it back it is allowed to be raised by the spring Dd^{x}.

To move the wedge D*d* to and fro it is connected by pins D^{o} with a bar marked at its two ends D′*d*, $D^{2}d$ at the back of the plate D^{x} so that when the bar D′*d*, $D^{2}d$, is moved endwise the wedge D*d* goes with it. Slots in the plate allow the pins D^{o} to move freely. The wedge D*c* is similarly secured to a bar marked D′*c*, $D^{2}c$ and the above arrangement is duplicated for the cam D*c* on the left hand side of Fig. 9. The spring and some of the other details are not shown on this side of the figure.

At each end of the machine are stops E E′ E^{2} E^{3} see Figs. 2, 15 and 16 having projecting pieces. A plan view of E′ E^{3} is shown in Fig. 16. When the main slide reaches the end of its throw say from left to right the projecting pieces on the stops E^{3} and E′ touch for example $D^{2}d$ and D′*d* respectively and change them from their previous positions if they were not already in the positions into which the stops would move them.

The stops are carried by slides which can be slid to and fro transversely of the machine along horizontal arms P^{2} P^{4} fixed to the frame of the machine. They can be slid outward by the action of cams E^{4} E^{5} and are drawn inward by the action of springs in a similar manner to the slides Pa′, Pa^{2}, Pa^{3}. The cams also have motion given to them from a shaft which has a step by step revolving motion transmitted to it at the proper time in the same way as described with respect to the cams O O. The cams E^{4} E^{5} are on hollow spindles which surround the spindles La, La′. They are turned at the proper time by pinions E^{2} (see right-hand half of Fig. 1), gearing into a toothed wheel E^{7}, on the axis of which is a wheel E^{8}, having larger teeth. On the pattern chain M^{x} are studs E^{9}. When by the movement of the endless chain one of these studs E^{9} engages with the teeth of the wheel E^{8} and gives a partial turn to this wheel a quarter turn is given to the cams E^{4}, E^{5}, and the down-throw cams are set to make either tighter or slacker courses according to the previous position of these cams.

In order to keep the work down while the needles are being pushed up by the jacquard, I have a row of hooks C and C′ (see Fig. 3) attached to each knocking over bar C^{2}. When the course is being made, these hooks are in the position shown at C′, so that the sinker loops lie over their stems. Before or just as the Jacquard barrels raise the needles the hooks C, C′, are lowered so as to hold the loops down while the needles are raised. They are lowered by inclines Cd or Cd′ (see Figs. 3 and 3^{b}), fixed on the cam plates D, D′. Toward the end of each course the inclines come above the ends of the rods Ca′, which stand up from the bars by which the hooks C C′ are carried and thereby lower and hold down the hooks. Afterward when the cam plates D, D′ are made to travel back in the opposite direction, the inclines are moved away from above the rods Ca′, and the hooks C, C^{c} are drawn upward by the action of springs Cs, (see Fig. 3). In the drawings, Fig. 3 both of the rods Ca′ are shown as being held down by the inclines Cd, Cd′, but one of the knocking over hooks is left up to illustrate its two positions.

The thread carrier G is carried by the arm G^{2} from a slide G^{x} which can be slidden along the fixed bar G^{3} by the bolt H which is held down by a spring. On the bar G^{3} are also two slides G^{10} each carrying an incline G^{11}. The slides can be moved nearer to or farther away from one another by screws G^{12} on concentric axes see Fig. 2^{x}. One screw acts on one slide and the other screw on the other. One axis has upon it two ratchet wheels G^{13} the teeth of which are in opposite directions. The other axis has also upon it two similar ratchet wheels G^{14}. The pawls for driving these wheels are carried by four levers F which turn on a fulcrum at F^{3}; the other ends of these levers have pins F′ projecting from them which are acted on or left at rest by the Jacquard cards whenever the jacquard is moved up to the needles

In Fig. 5, the Jacquard barrels are shown in their raised positions; one lever F, (the front one,) is shown to have been acted upon by the jacquard, the other, (the back one) remaining out of action, there being a hole in the Jacquard card opposite to its pin F′. The pawls are pressed toward the ratchet wheels by springs F^{6}. The levers are drawn upward by coiled springs F^{4} attached to a portion of the frame-work of the machine. Each pawl is formed with a tail piece F^{5}. When the Jacquard barrel descends the levers F previously acted upon by it are drawn upward by their coiled springs F^{4}, and the tail pieces F^{5} of their

pawls strike against a fixed bar F^4, and so disengage the pawls from the wheels. The bar F^4 is an extension from an arm F^7 that stands up from the portion of the framing that carries the bearings for the axes of the ratchet wheels. The splicing thread is carried on the front of the thread carrier, and passing down through G, with the foundation thread, is carried by it to the needles. It passes first through a hole in a spring G', see Figs. 4, 4^a, 4^b, 4^c, and 4^d and when free passes in continually with the main thread, but by turning the T shaped piece G^2 so as to press upon the spring, the thread is broken, and when desired to run it in again, this piece G^2, is pushed aside so as to free it. This enables the splicing thread to be either run in continually or to be broken off at the end of the course on one bed.

To actuate the T-shaped piece G^2, I have a series of stops on the circumference of two wheels, carried on two arms G^{12}, which stand up from the slides G^{10} which carry the inclines G^{11} for regulating the throw of the thread carrier. When G^2 is vertical, the splicing thread is broken. When G^2 is inclined in either direction, the thread is free and passes into work with the other thread. If the splicing thread is not to be inserted either when a course is being made from right to left or vice versa, then both stop wheels G^6 are in the position shown at Fig. 4^b and G^2 remains in a vertical position. If a splicing thread is to be inserted in courses made from left to right, then the left-hand stop wheel G^6 is turned into the position shown in Fig. 4^a, so that the left hand end of G^7 comes against one of the longer projections of G^6. If, on the other hand, a splicing thread is to be inserted in courses made from right to left, the right-hand end of G^7 comes against one of the longer projections of the right hand wheel G^6. The wheels G^6 are turned into the positions required for making these changes by a ratchet wheel G^5 on the axis which carries them, it being acted on by a pawl G^4, which at its lower end is jointed to an arm K^7 which can turn freely around the axis of the arm K, while its upper end is by a spring Ga, (shown in Fig. 4) held against the ratchet wheel G^5. When the arm is acted upon by a pin M^2, on the chain M^3, the pawl is raised and gives a partial turn to the ratchet wheel. When the pin passes from below the arm, the arm and pawl descend by their own weight. A feather projecting inward from the boss of each wheel G^6 enters a groove f^7 (see Fig. 2) formed along the shaft that carries them, so that these wheels may be moved toward or away from one another and yet always be turned by the shaft.

For shogging the movable needle bed, I fix to the right hand end of it a short rack K^3 the teeth of which fit into zigzag cam grooves K^2 formed around a cylinder to which a step by step revolving motion is given at the proper times. When the cam revolves, it moves the bed first to the left, then has a straight place and stands still. Afterward it moves it back again, and stands still again. The cam is shown at K^2, and the motion is given by the lever K, acting upon a ratchet K^4, on the axis K' of the cam K^2, and actuated by a stud M^2 on the chain M^3.

In order fully to show the working of the machine, I will proceed to describe the mode of making a fashioned stocking by widening, and commencing at the toe. I first make two ribbed courses, of any desired width, by lifting the required number of needles up at both sides through the jacquards L and L'. They are then raised sufficiently high to catch the thread from the thread carrier G, and brought down again by the stitch cam Db and the corresponding one on the opposite bed. After these two ribbed courses, I make one plain course on each side, which is done by the jacquard acting alternately on each side so making a tube. I then shog the back needle bed the distance of two needles to one side say to the right by means of K K', K^3, K^2, so as to leave two needles more at one end of each bed than at the corresponding end of the other, so that if making ribbed work, there would be a needle wanting, say, at the right hand end of the front bed, and at the left hand end of the back bed. I now work a course from left to right on the back bed, and on the front bed bring up only one needle a^x to fill up the vacant space. This needle having no loop on it, lies between the two outer needles of the opposite bed, in such a manner, that the yarn between them, generally known as the sinker loop, is laid over the empty needle. See Diagrams C, D, and E. I next make a course on the front bed when the thread being caught by the front row of needles, is worked into the sinker loop lying round the new needle, thus filling up what would have otherwise been a hole, and widening the fabric by one needle. During the making of this course, a single needle a^{xx} has been raised at the left hand end of the back bed so as to bring another needle into action in the way already described. A plain course is now made on both beds, and the back bed then shogged two needles to the left so as to repeat the operation of widening. This is continued as long as necessary to attain the width desired for the toe, after which a number of plain courses are made until the gusset is reached. The necessary number of widenings are then made in a similar manner to that above described and afterward the heel is made by working backward and forward on the front bed only and on a varying number of needles, so as to produce what is known as the Griswold heel. Then follow a number of plain courses on each side to make a plain tube until the calf when the work is again widened and afterward a plain tube of full width, completes the stocking. In this way I obtain a properly shaped foot narrower than the leg—and the leg also properly fashioned. By the splicing mechanism herein-

before described I can also put in a full spliced toe and heel and spliced sole, splicing half round for some distance above the heel, and splicing half round at the knee.

In making the heel, when a needle has been withdrawn, I raise it again the next course, sufficiently high to catch the thread for the new loop, but not sufficiently for it to be caught by the cam *Da*, so that when it is brought down again, it has two loops on, which remain on until the needle is again required for widening up the heel. To accomplish this I cut the under side of the cam *Da* shorter so that the needles require lifting one-eighth inch higher to be caught by it, and the Jacquard plates have a thin piece of iron plate L^{xxx} riveted on them as shown in Fig. 3 so as to thicken them to the extent necessary to give the extra lift. Where I require to lift up a needle the lesser distance, this extra piece of iron is cut away, so as to lift it a less distance. This tucks one or more needles.

In some cases in making a stocking in place of commencing at the toe as above described and working the stocking upward I place on to the needles a rib top and work the stocking downward.

What I claim is—

1. The combination of two parallel needle beds, a thread layer, means for operating it, cams for raising and for lowering the needles reciprocated to and fro along each needle bed, the lowering cams being so formed as to lower the needles out of reach of the raising cams, a continuous chain of Jacquard cards for each needle bed, mechanism for bringing one of such cards against the ends of the needles just before a course of work is made on that bed so as to raise such of the needles as are to be brought into work and bring them within reach of the raising cam-control mechanism which controls whether the Jacquard mechanism shall come into action or remain out of action, and means for holding the advancing down-throw cam above the needles raised into action by the jacquard.

2. The combination of two parallel needle beds, a thread layer, means for operating it, cams for raising and for lowering the needles reciprocated to and fro along each needle bed, the lowering cams being so formed as to lower the needles out of reach of the raising cams, a Jacquard barrel with a continuous chain of cards passing over it below each needle bed,—mechanism for raising each Jacquard barrel against the ends of the needles of the bed above it just before a course of work is made on that bed,—mechanism for giving a partial turn to each Jacquard barrel as it is moved back away from the needles, control mechanism for bringing into action or not bringing into action the Jacquard barrels at each course and means for holding the advancing down-throw cam above the needles raised into action by the jacquard.

3. The combination of the two parallel needle beds one capable of being moved endwise to and fro, the thread layer, means for operating it, the cams for raising and lowering the needles; the lowering cams being so formed as to lower the needles below the reach of the raising cams, the Jacquard mechanism for raising needles in either bed, mechanism for shifting the bed endwise, the pattern chain for controlling its movements at the times required, so as when the work is to be widened to enable a needle which is to be brought into work at the end of one bed to be made to rise between the last two end needles in the other bed to have the thread with which a course of work is made on the needles of that bed laid across it, and means for holding the advancing down-throw cam above the needles raised into action by the jacquard.

4. The combination of the two parallel needle beds, one capable of being moved endwise to and fro, the thread layer, means for operating it, the cams for raising and lowering the needles, the lowering cams being so formed as to lower the needles below the reach of the raising cams, the Jacquard mechanism for raising the needles in either bed, and mechanism for retaining a splicing thread or allowing it to pass with the main thread into the work so as to splice or thicken the work produced either on the one bed or the other or on some of the needles on one bed and some on the other, and means for holding the advancing down-throw cam above the needles raised into action by the jacquard.

5. The combination of two parallel needle beds, a thread layer, means for operating the thread layer, cams for raising and lowering the needles means for operating them in such manner that work is first produced on the needles of one needle bed and then on the other so as to produce tubular work, a spring upon the thread layer having an eye for a thickening thread led through the same thread layer, the rocking lever engaging the spring for nipping and holding this thickening thread or allowing it to run free, and automatic mechanism for controlling the position of the lever to make it hold or release the thread at the times required, substantially as described.

WILLIAM TERTIUS ROWLETT.

Witnesses:
WM. BRAMLEY,
GEO. WM. COLTMAN,
Clerks to Messrs. Stone & Co., Solrs., Leicester.

581

(No Model.) 2 Sheets—Sheet 1.

G. SOWTER.

FASHIONING APPARATUS FOR STRAIGHT KNITTING MACHINES.

No. 478,527. Patented July 5, 1892.

Fig. 1.

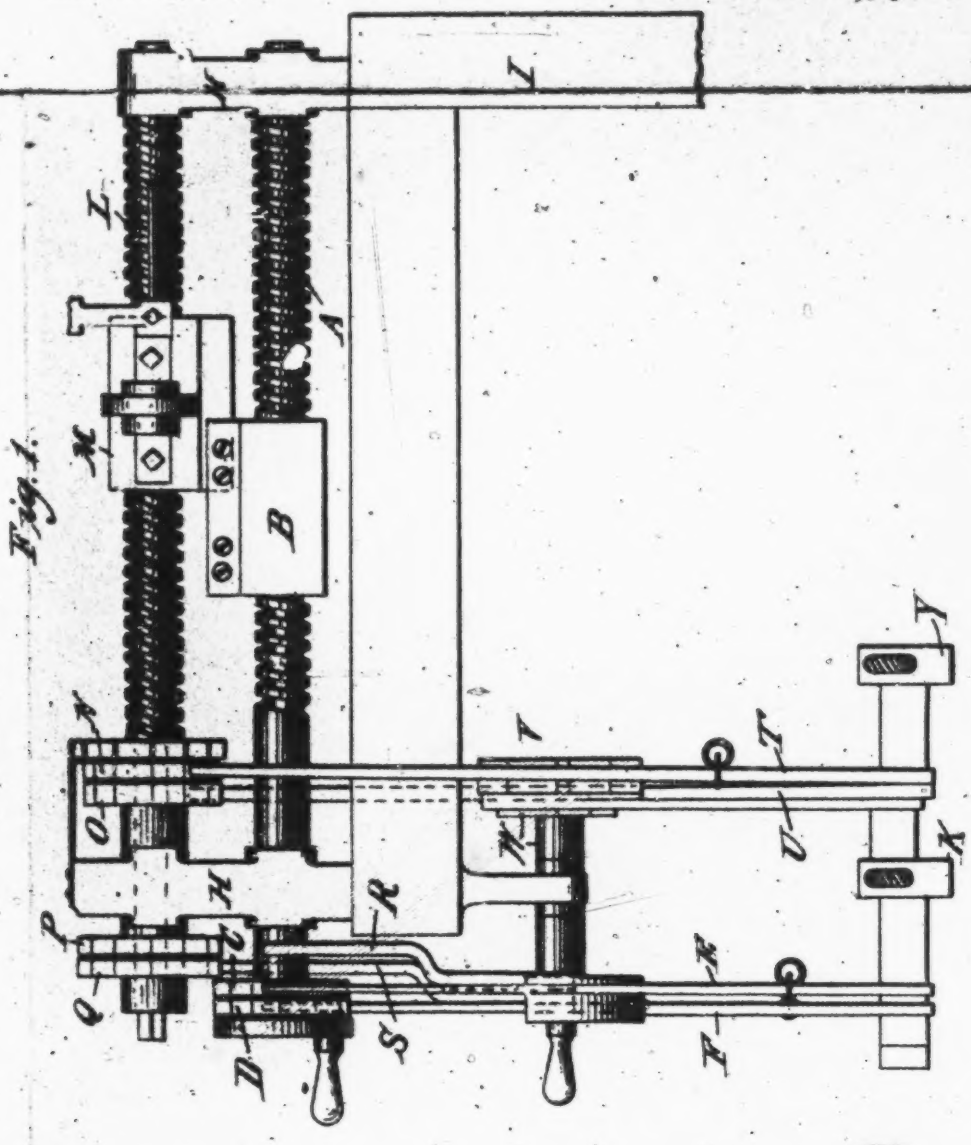

Fig. 2.

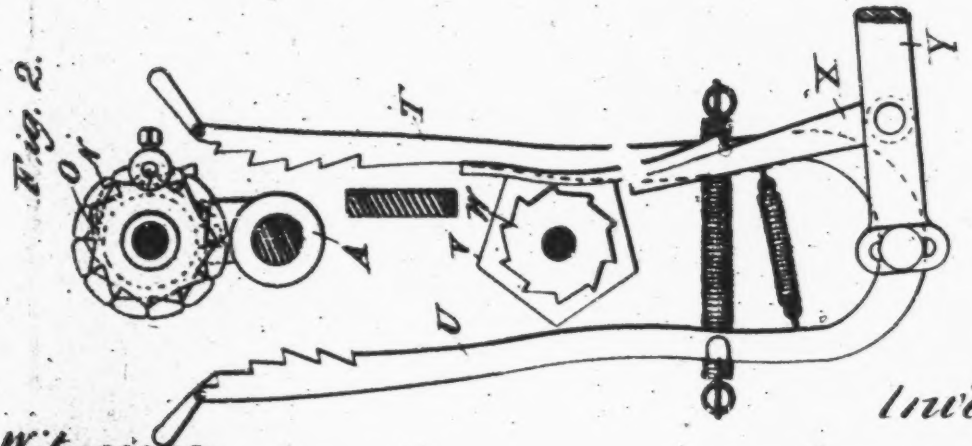

Witnesses:
Joseph Hill Davis
Thomas Bernard Redgate

Inventor:
George Sowter

582

(No Model.) 2 Sheets—Sheet 2.

G. SOWTER.

FASHIONING APPARATUS FOR STRAIGHT KNITTING MACHINES.

No. 478,527. Patented July 5, 1892.

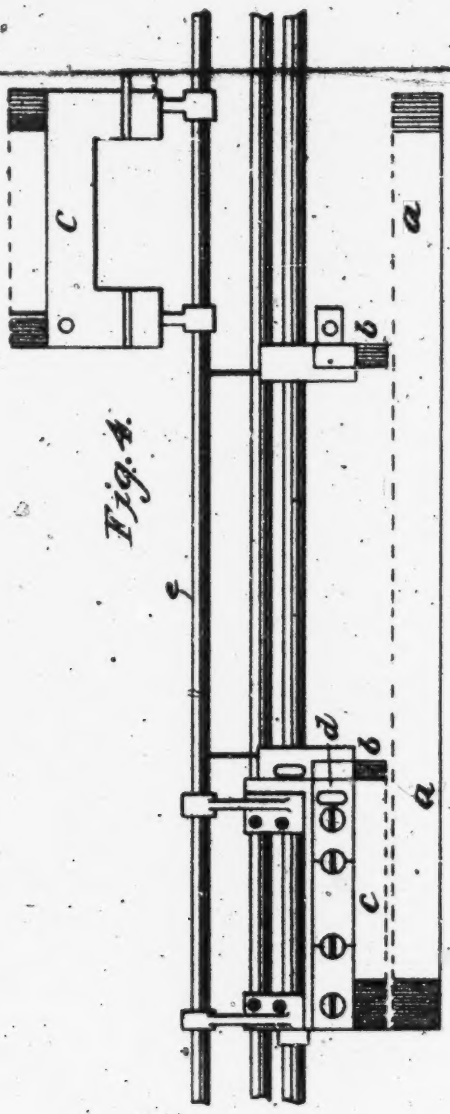

Fig. 4.

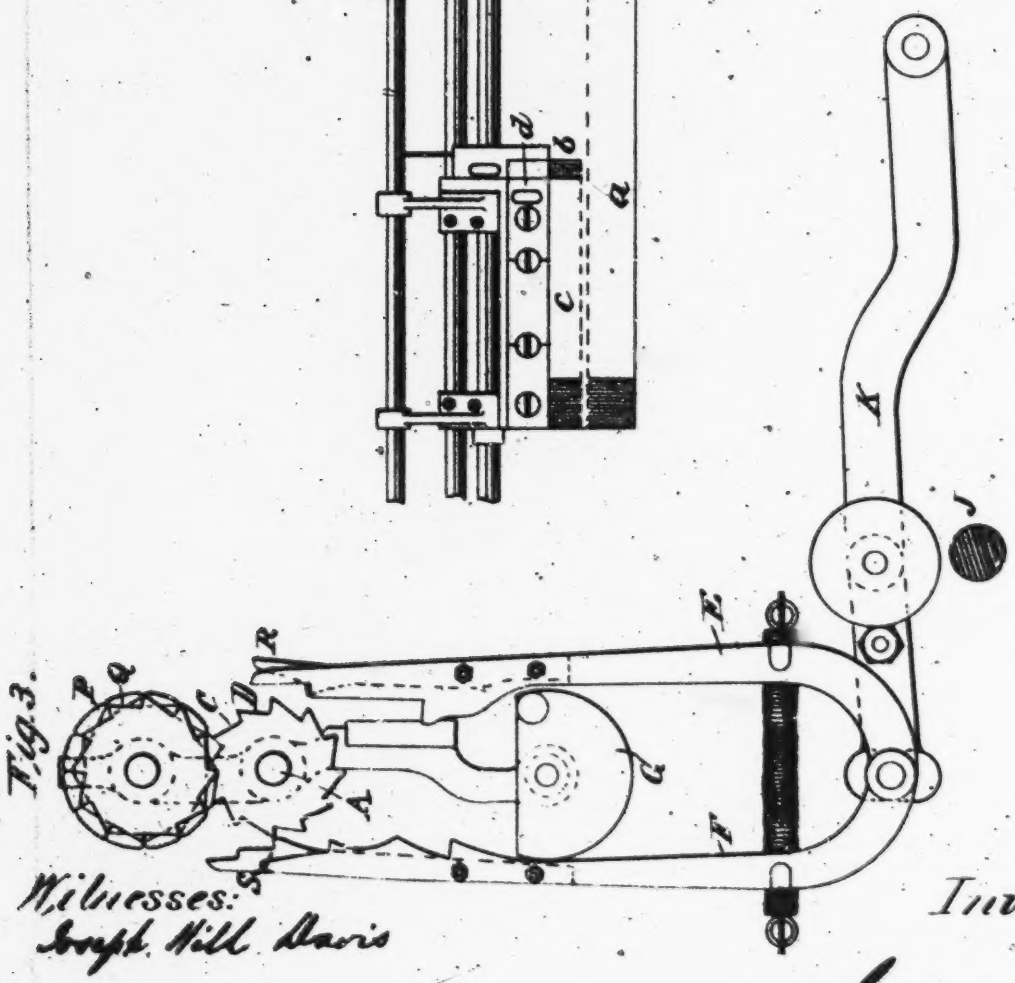

Fig. 3.

Witnesses:
Joseph Hill Davis
Thomas Bernard Redgate

Inventor.
George Sowter

UNITED STATES PATENT OFFICE.

GEORGE SOWTER, OF NOTTINGHAM, ENGLAND.

FASHIONING APPARATUS FOR STRAIGHT-KNITTING MACHINES.

SPECIFICATION forming part of Letters Patent No. 478,827, dated July 5, 1892.

Application filed October 22, 1889. Serial No. 327,552. (No model.) Patented in England December 18, 1888, No. 18,461.

To all whom it may concern:

Be it known that I, GEORGE SOWTER, hosiery-manufacturer, a subject of the Queen of Great Britain, residing at 88 The Chase, St. Ann's Well Road, Nottingham, England, have invented certain Improvements in Fashioning Apparatus for Straight-Knitting Machines, (for which I have obtained a patent in Great Britain, No. 18,461, bearing date December 18, 1888,) of which the following is a specification.

My improvement relates to knitting-machines, known as "Cotton's system," employed in producing articles known as "hose," "socks," "pants," "vests," or similar articles in which widenings and narrowings are required at any distance from the selvage. The usual mode of working the widening and narrowing instruments, which are carried by rods or bars, is by attaching such rods or bars to the screw-box carrying the selvage-stops and moving them at the same time. By this mode only one uniform set of widenings or narrowings can be made—that is, if the instruments are set to work four heads or eight needles from the selvage they traverse with the stops and remain at one uniform distance from the selvage of the fabric. I propose to lengthen the brackets carrying the screw upon which the stops for the thread-layer are traversed to the right or left and carry with these brackets a separate screw, upon which a box with arm is attached to traverse the points or instruments to the right or left independently of the selvage-stops by the following means: The outer end of axle of the top screw is provided with two ratchet-wheels and clawkers. The clawkers are fastened with bolts to the ordinary clawkers, which drive the screw, upon which stops for the thread-layers are traversed, thus giving a simultaneous movement to widen or narrow from the selvage in the usual manner. A second pair of ratchet-wheels is placed on the axle of the top screw inside the end bracket, driven by clawkers hinged to a lever rocking on an axle carried by the framing of the machine, the lever having a rising-and-falling movement given it by a cam to traverse the instruments to the right or left before the screw and stops for the thread-layers are put in motion. The axle for the cam for narrowing and widening, which is moved by hand between the outside clawkers, is made longer to carry a pentagonal cam and ratchet-wheel inside to throw the clawkers in gear in one side and out of gear on the other alternately by a small ratchet hinged to the outside lever, which has a rising-and-falling movement and is automatic in its action. I also propose to use a wide set of points or instruments for transferring the loops to the right or left, as required. These leads and instruments are carried on rods or bars attached to the narrowing-machine and fitted up to the ordinary instrument or coverers used on the selvage when in action. By this arrangement the ordinary instrument used on the selvage can be traversed by the top screw to the required distance inside the fabric from the selvage and the wide set of instruments brought down to the instruments used on the selvage to transfer the loops when widening or narrowing is required any distance from the selvage of the fabric, so as to form pockets or gores without seams, being required in ladies' vests, or forming the heels of stockings without seams, and such like articles.

Figure 1 is a front view with cam-shaft removed; Fig. 2, a sectional end elevation; Fig. 3, an end elevation; Fig. 4, a front elevation of one set of needles, showing one set of points or instruments attached to the selvage points or instruments and one set separated from the selvage points or instruments.

A, Fig. 1, is the screw for working the selvage-points, as in the ordinary machine, with its box B, ratchet-wheels C and D, clawkers E and F, while I is part of machine-standard.

For working my improvement I lengthen the bracket H H to carry the ordinary screw A with its box B, also to carry the special screw L with its box M. On the end of screw L are two pairs of ratchet-wheels N and O and P and Q, the latter being worked from clawkers E and F by attaching to them additional clawkers R and S, which have a rising-and-falling movement, as in the ordinary machine. The other pair of ratchet-wheels N and O, I work from clawkers T and U by means of a cam and lever Y, similar to those used for clawkers E and F, to traverse points or instruments five needles to the right or left alternately before the instruments reach the needles, to transfer the loops one needle to the right or left to extend or contract the fabric.

I also lengthen the axle of the cam G, Fig. 3, to carry a cam V, Fig. 2, with an odd number of faces and a ratchet-wheel W, having twice as many teeth as the cam V has faces. In the drawings they are shown as ten and five, respectively, the wheel W being attached to cam V. To lever Y, Fig. 2, which operates the clawkers T and U, I pivot a pawl X, which in rising works the ratchet-wheel W and turns the cam V half the length round of the odd face, thus insuring the automatic revolution of the cam V, and throws out of gear the clawkers T and U alternately, causing the screw L to traverse box M to the right or left five needles at each upward movement.

In Fig. 4, *a a* are the needles on which the fabric is made; *b b*, the points or instruments for narrowing or widening, which are connected to the box M on screw L in the usual manner. The bars or rods carrying the points *b* are each attached to a box M in the usual manner, and one of said rods is shown in Fig. 1 of the drawings as broken off. At each end of the machine, as shown in Fig. 4, in addition to these narrow points *b*, I use a wide set of points *c c*, eight inches long, on each side of the division of the machine. Fig. 4 shows one division of the machine. These wide points I secure to the ordinary points *b b* by screws *d*, so that they can both be moved as one piece from the top screw, and are carried by a shaft *e*, attached to the machine. The points *c* on the right-hand side, Fig. 4, are shown separated from the selvage-points, being partially revolved about the shaft *e* when out of active; but I do not confine myself to any particular method of separating the points or instruments.

Having described the drawings of my apparatus which is applied to each end of the knitting-machine, I will proceed to explain the working of the same, so that it may be fully understood. In making a lady's vest, fashioned gore, or besom without a seam in the gore, I make the bottom portion of the body in the usual manner to the commencement. To widen and form the gore, the instruments *b* are traversed in five or six inches, as required, from the selvage. The wide set of instruments *c* is then secured by screws *d* to the instruments *b b*. Clawkers E and R, Fig. 1, acting on ratchet-wheels P and C, attached to screws A and L, traverse the boxes B and M and points *c b* simultaneously, extending the selvage and stops B one needle outward. At the same time the pawl X in rising works the ratchet-wheel W on cam V, throws in gear clawker U, and clawker T out of gear. I then draw two or more courses. Clawker U rises, acting on ratchet-wheel O, and traverses box M and points *c b* five needles inward from the last widening. Clawkers E and R come into operation again, extending the selvage one needle. At the same time pawl X, acting on ratchet-wheel W on cam V, throws in gear clawker T and out of gear clawker U. I then draw two or more courses. Clawker T, coming into action on ratchet-wheel N, traverses box M and points *c b* four needles outward, thus making two rows of fashioning and leaving the points one needle inward from the selvage. When eighteen or more widenings, as required, are made, I turn the cam G by hand and bring into action clawkers T and S to narrow the fabric in the same manner, the number of courses required forming the gore without a seam, leaving the same width on the machine. I then disconnect the points or instruments *c*, traverse the points *b* on to the selvage, and proceed to make the remaining portion of the body in the usual manner. To make pants with what are known as "split hips" and "twisted ankles" without a seam in the hips or ankles, I traverse in the points six or seven inches, secure the wide instrument *c* to points *b* by screws *d*, and proceed to widen out the two selvages, same as in gore, six or seven leads, as required. I then disconnect instruments *c*, traverse points *b* on to the selvage, widen out the pants in the usual manner to the gusset and narrow them down the thigh, make five or six inches plain, traverse in the points *b* on one side only four or more inches, secure instruments *c* to point *b*, and proceed to narrow the ankle, same as gore, in vest for ten or more leads, as required.

Having now particularly described and ascertained the nature of my said invention and in what manner the same is to be performed, I declare that what I claim is—

1. The combination, in a straight-bar knitting-machine, of the lengthened brackets H, screws A and L, respectively carrying selvage-stops B and fastening-box M, and pawls and ratchet-wheels for operating said screws, substantially as described.

2. The combination of the screws and their ratchet-wheels with the clawkers E and F, having attached thereto the clawkers R and S to move the screws at the same time, substantially as described.

3. The combination of the clawkers U and T with the cam V, ratchet-wheel W, and pawl X to control said clawkers, substantially as described.

4. The combination of shaft E and wide sets of points *c*, hinged thereto, with selvage-points *b* and screws *d* to connect said wide points and selvage-points, substantially as described.

5. The combination of screw A and selvage-stop B with screw L, box M, ratchet-wheels N and O, and clawkers U and T to revolve said screw L independently of said screw A, substantially as described.

GEORGE SOWTER.

Witnesses:
H. W. BULL,
H. J. L. CROSBY.

R. E. SCHLETTER.

ATTACHMENT FOR STRAIGHT KNITTING MACHINES.

APPLICATION FILED JAN. 6, 1914.

1,198,482.

Patented Sept. 19, 1916.

5 SHEETS—SHEET 1.

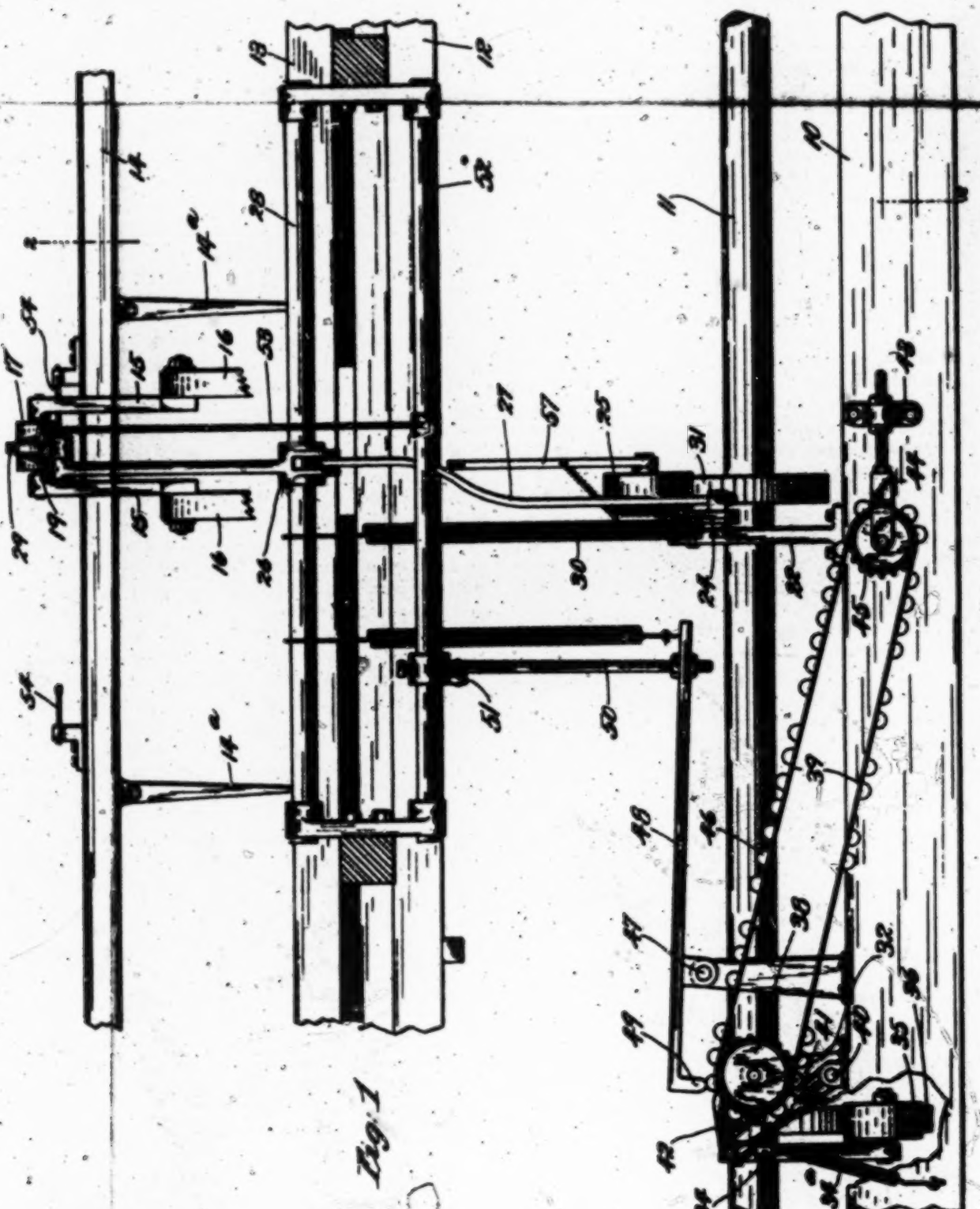

Fig. 1

WITNESSES:

Roger C. Vaughn

Agnes C. Casky

INVENTOR.

Richard E. Schletter.

BY William J. Jackson

ATTORNEY.

587

R. E. SCHLETTER.

ATTACHMENT FOR STRAIGHT KNITTING MACHINES.

APPLICATION FILED JAN. 6, 1914.

1,198,482.

Patented Sept. 19, 1916.

5 SHEETS—SHEET 2.

Fig. 2.

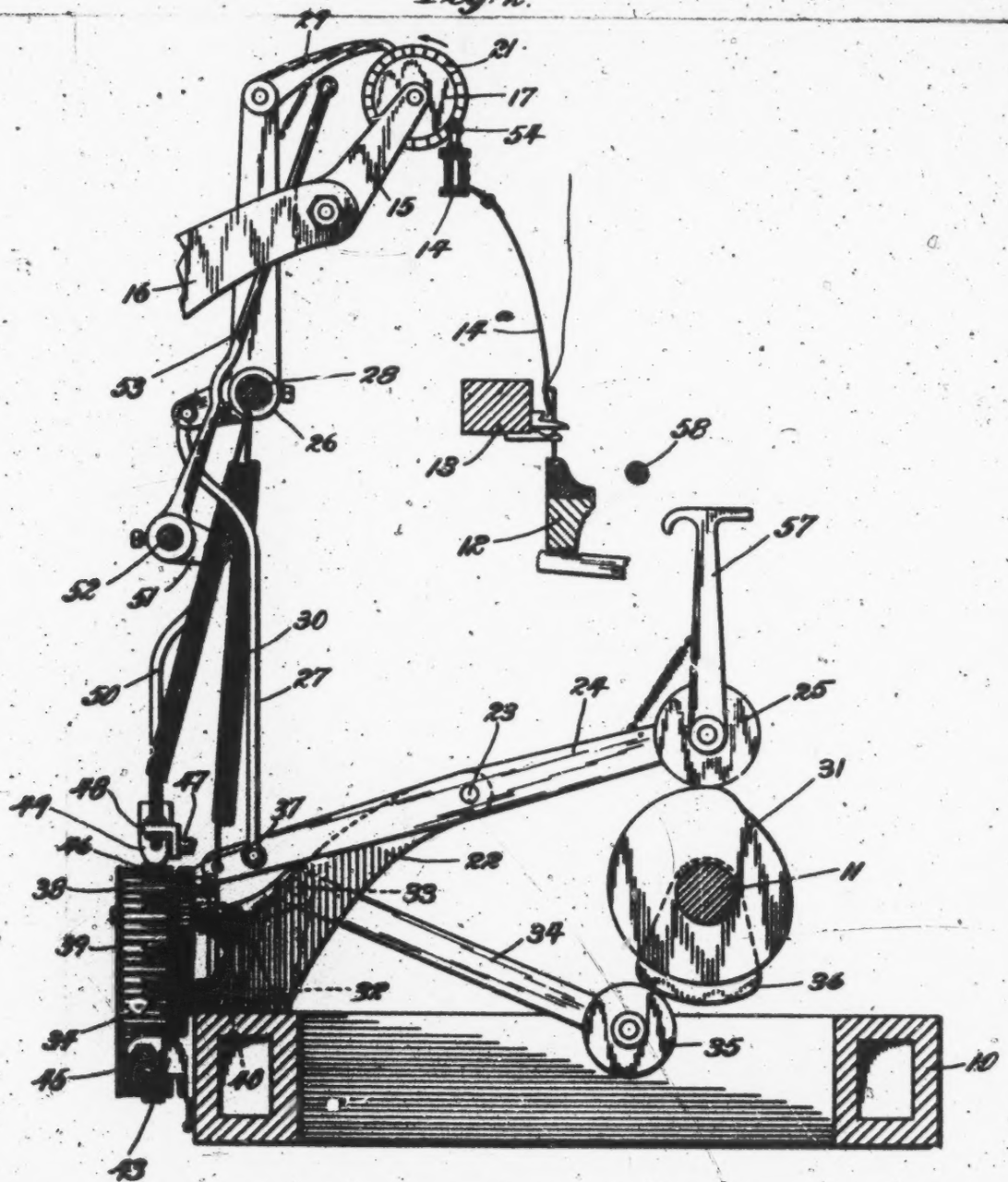

WITNESSES:

Edgar Evan Jun.

Agnes C. Carley

INVENTOR.

Richard E. Schletter.

BY William J. Jackson

ATTORNEY.

R. E. SCHLETTER.

ATTACHMENT FOR STRAIGHT KNITTING MACHINES.

APPLICATION FILED JAN. 6, 1914.

1,198,482. Patented Sept. 19, 1916.

5 SHEETS—SHEET 3.

Fig: 3.

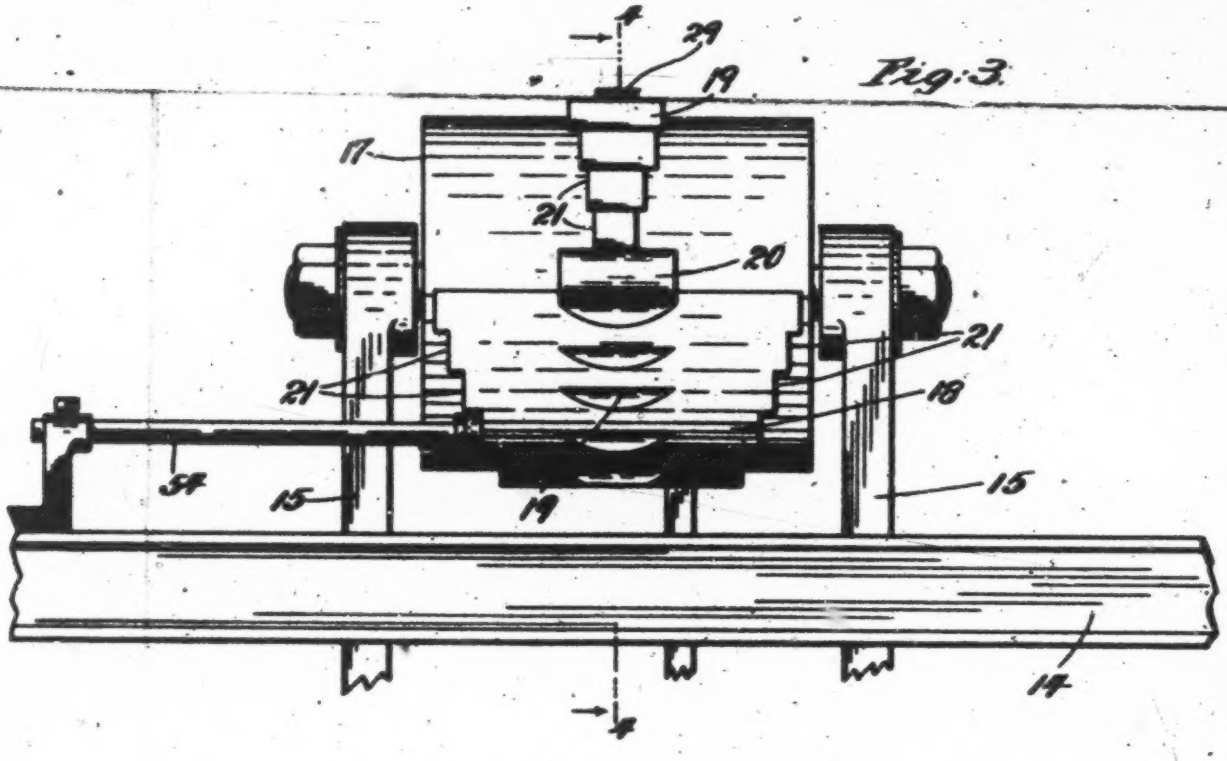

Fig: 4.

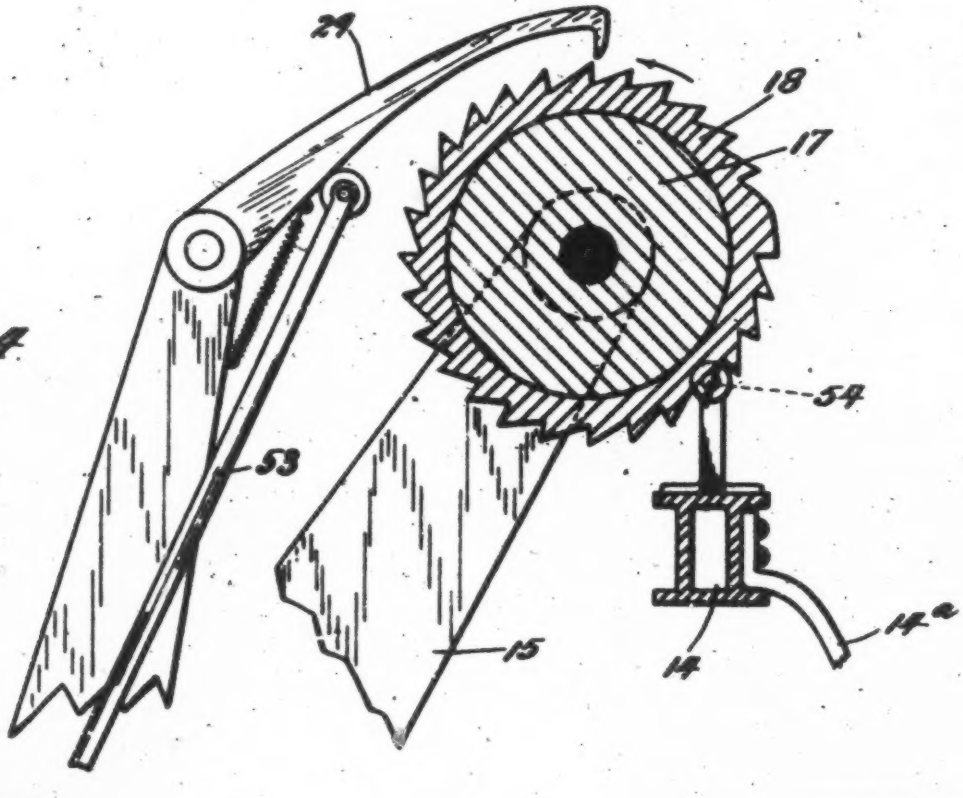

WITNESSES:

Edgar Evans Jr.

Agnes E. Carley

INVENTOR.

Richard E. Schletter.

BY

William J. Jackson

ATTORNEY.

589

R. E. SCHLETTER.

ATTACHMENT FOR STRAIGHT KNITTING MACHINES.

APPLICATION FILED JAN. 6, 1914.

1,198,482.

Patented Sept. 19, 1916.

5 SHEETS—SHEET 4.

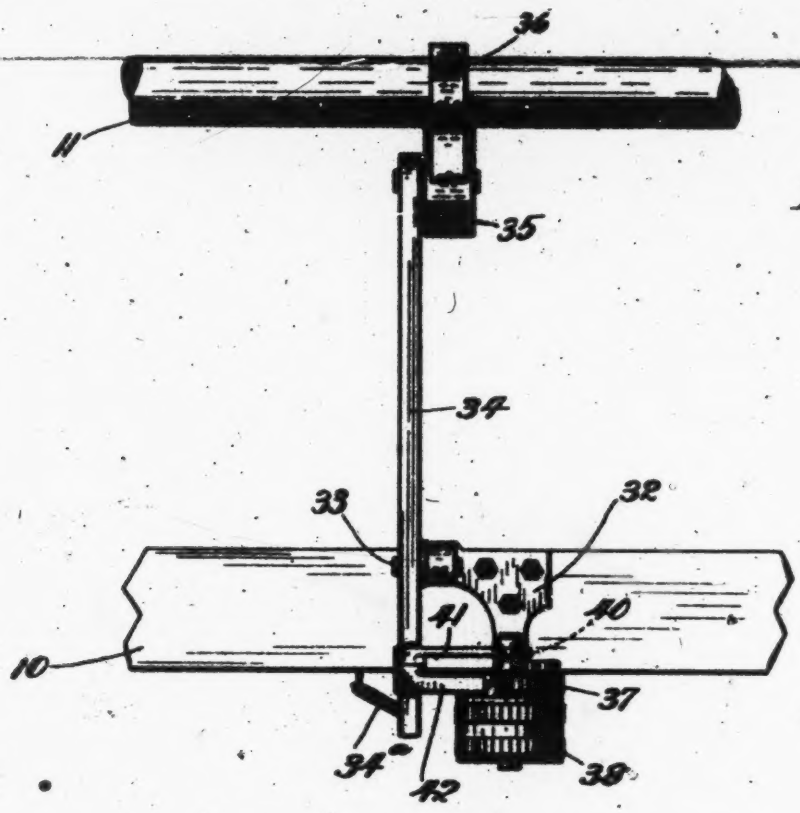

Fig: 5.

Fig: 8.

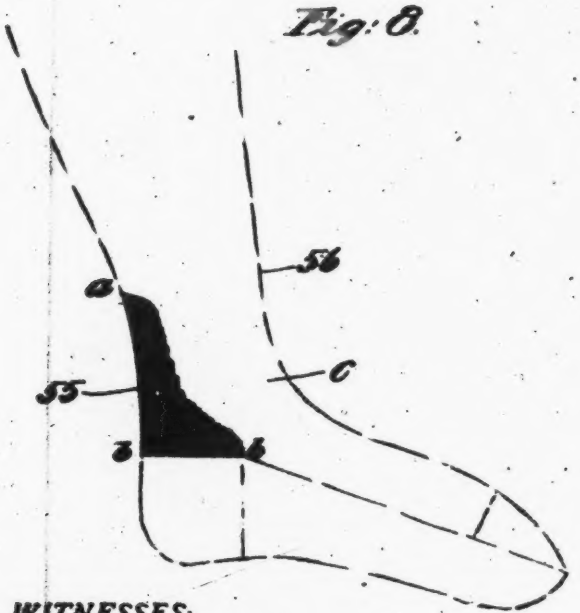

Fig: 9.

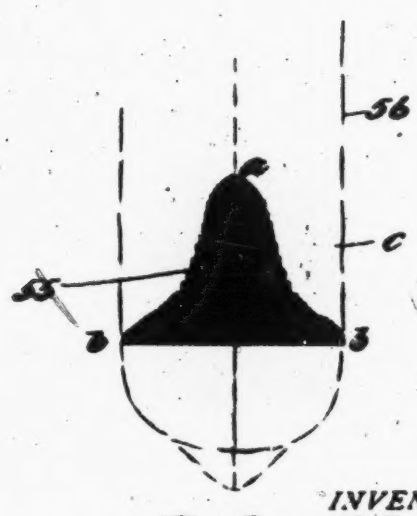

WITNESSES:

Edgar Crawford.

Agnes S. Cashy

INVENTOR.

Richard E. Schletter

BY

William J. Jackson

ATTORNEY.

590

R. E. SCHLETTER.

ATTACHMENT FOR STRAIGHT KNITTING MACHINES.

APPLICATION FILED JAN. 6, 1914.

1,198,482.

Patented Sept. 19, 1916.

5 SHEETS—SHEET 5.

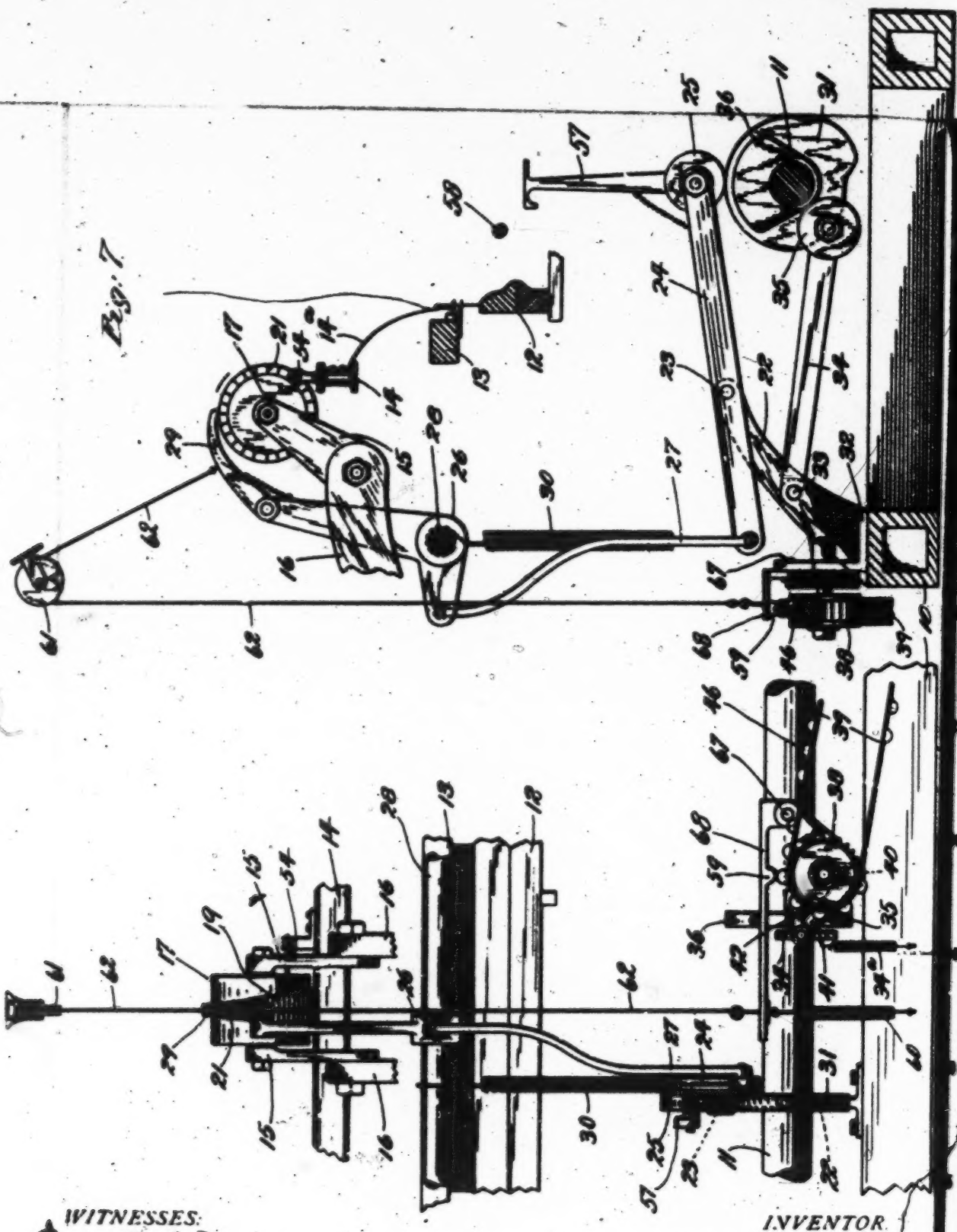

Fig. 6

Fig. 7

WITNESSES:

Edgar Crandell Jr.

Agnes E. Caskey

INVENTOR.

Richard E. Schletter

BY

William J. Jordan

ATTORNEY.

UNITED STATES PATENT OFFICE.

RICHARD ERNST SCHLETTER, OF PHILADELPHIA, PENNSYLVANIA.

ATTACHMENT FOR STRAIGHT-KNITTING MACHINES.

1,198,482. Specification of Letters Patent. Patented Sept. 19, 1916.

Application filed January 6, 1914. Serial No. 810,660.

To all whom it may concern:

Be it known that I, RICHARD ERNST SCHLETTER, a subject of the Emperor of Germany, residing at Philadelphia, county of Philadelphia, and State of Pennsylvania, have invented a certain new and useful Attachment for Straight-Knitting Machines, of which the following is a specification.

This invention broadly stated relates to straight-bar knitting machines and has more particular relation to an attachment therefor for plotting or fashioning a reinforce portion for the heels of stockings.

The principal object of the present invention may be said to reside in the providing of a simple, efficient and comparatively inexpensive mechanism adapted for attachment to an ordinary straight-bar knitting machine without change of construction or operation of the machine parts whereby a neat and efficient reinforce may be plotted or fashioned for the heel portion of stockings.

Other and further objects of the present invention reside in the providing of general details of construction and arrangement and operation of parts as will hereinafter more fully appear.

The nature, characteristic features and scope of the invention will be more fully understood from the following description taken in connection with the accompanying drawings forming part hereof and in which:

Figure 1, is a view in rear elevation illustrating the attachment of the invention in application to so much of a straight-bar knitting machine as is necessary to an understanding of the invention, Fig. 2, is a view in section taken upon the line 2—2 of Fig. 1, Fig. 3, is a fragmentary view in front elevation of the upper portion of Fig. 2, Fig. 4, is a view in section taken upon the line 4—4 of Fig. 3, looking in the direction of the arrows, Fig. 5, is a fragmentary view in plan of the left-hand side of Fig. 1, Fig. 6, is a fragmentary view, in rear elevation, of a slightly modified form of the invention, Fig. 7, is an end view thereof, partly sectioned, and Figs. 8 and 9, are views in side and end elevation respectively of a stocking equipped with the reinforce as plotted by the attachment embodying the invention.

Referring to the drawings, there is illustrated a physical embodiment of the invention constructed in accordance with the mode best known to me at this time for practising the invention. Obviously, various details of construction and arrangement of parts may be altered without departing from the spirit of the invention.

In the specific embodiment of the invention disclosed in Figs. 1 to 5, inclusive of the drawings, 10, designates the frame of a straight-bar knitting machine of any suitable design. 11, designates the main driving shaft thereof, 12, the vertically reciprocating needle bar, 13, the sinker head and its sinkers, including complemental bits and 14, the horizontally disposed reciprocating carrier bar and its thread carriers 14^a. These parts are of ordinary and well known construction and form no part of the present invention. The attachment of the invention is designed for application to the center division of a knitting machine and is adapted to regulate, in each division, the formation of stocking heel reinforcement.

Rotatably supported between brackets 15, carried by a suitable part 16, of the frame of the knitting machine and in the path of travel of the carrier bar 14, is a plotting, pattern or fashioning cylinder 17, see Figs. 3 and 4. This cylinder is located immediately above the carrier bar 14, which bar is provided with stops, hereinafter referred to, which in abutting against the cylinder limit the bar movement. The cylinder 17, is provided with a concentric covering 18, circumferentially provided with teeth 19, a blank tooth 20, however being present, see Figs. 3 and 4, for a purpose to be presently described. The covering 18, is so cut away that upon each side thereof its edges are notched as at 21, in a step-like manner for a purpose to be presently described. In other words commencing at a point adjacent the blank tooth 20, the surface of the covering gradually increases in width throughout the circumference of the cylinder.

A description will now be given of the mechanism for operating the cylinder 17. Carried by the frame work 10, of the knitting machine is a bracket or support 22, fulcrumed to which as at 23, is a lever 24, one end of which lever carries a roller 25, and the opposite end of which lever has connection with the short arm of a bell-crank lever 26, as by means of a rod 27, the bell-crank lever 26, having fixed relation with a rock shaft 28. The long arm of the bell-crank lever 26, has pivoted thereto a spring impelled

pawl 29, for pawling the cylinder 17. A cam 31, fixed to the main driving shaft 11, is adapted to coöperatively engage the roller 25, of the lever 24, to effect the pawling of the cylinder 17. A coiled spring 30, is interposed between the rock-shaft 28, and the free end of the lever 24, for insuring the return of the rock-shaft and its complemental parts to normal position. In order to permit of the proper pawling of the cylinder 17, other mechanism is present, a description of which will now be given. Secured to the frame 10, of the knitting machine is a bracket 32, see Fig. 5, fulcrumed to which as at 33, is a lever 34, one end of which lever is connected to the frame 10, by means of a coiled spring 34a, and the other end of which lever is provided with a roller 35. The roller 35, is adapted to be coöperatively engaged by a cam 36, fixed to the main driving shaft 11. Journaled to the bracket 32, at right angles to the fulcrum point 33, of the lever 34, is a ratchet wheel 37, see Fig. 5, and on the same journal carrying the ratchet wheel is a sprocket wheel 38. Having pivotal connection as at 40, with the bracket 32, is a lever 41, pivoted to which is a pawl 42, for pawling the ratchet wheel 37. The lever 34, and the lever 41, are so arranged at an angle with respect to one another that as the cam 36, operates the lever 34 vertically or up and down, the lever 41, together with its pawl 42, is reciprocated back and forth for imparting motion to the sprocket wheel 38. Having adjustable connection with a bracket 43, fixed to the frame 10, is a forked member 44, see Fig. 1. Pivotally carried by the forked member 44, is a second sprocket wheel 45. A sprocket chain 39, is accommodated by the sprocket wheels 38 and 45. Fixed to the sprocket chain 39, are buttons or projections 46, arranged and designed to coöperate with the pawl releasing mechanism about to be described. Fulcrumed as at 47, to a suitable part of the knitting machine is a lever 48, one end of which is provided with a depending lug or projection 49, and the opposite end of which connects, as by means of a rod 50, with a crank 51, fixed to a second rock-shaft 52. This rock-shaft 52, has fixed thereto, an upwardly extending rod 53, the upper end of which is adapted to co-act with the pawl 29, to raise the same at predetermined intervals, and to permit the pawl to be returned to operative position. It may be here stated that the spacing of the projections or buttons 46, upon the sprocket chain 39, determines the operation of the rod 53, and the lifting of its complemental pawl 20. Thus as a button 46, elevates the lug or projection 49, of the fulcrumed lever 48, said lever through the instrumentality of the rock-shaft 52, causes the free end of the rod 53, to recede from the pawl 29, to permit the same to pawl in the direction of the arrow in Fig. 2, the cylinder 17. Obviously, as a button 46, leaves the lug or projection 49, of the lever 48, the part 49, drops between adjacent buttons thereby causing the free end of the rod 53, to abut against the underside of the pawl 29, see Fig. 4, and raise the same from the teeth 19, of the cylinder 17, until another button 46, operates the rod 53 at the proper time whereby said pawl through the operation of the lever 24, connection 27, rock-shaft 28, and bell-crank lever 26, engages another tooth of the cylinder 17, and so on. It will be understood in this connection that the cams 31, and 36, are arranged and timed to coöperate with the described parts so as to properly accomplish desired results. The covering 18, of the cylinder 17, is shaped and proportioned marginally considered as described to coöperate with rods 54, adjustably fixed to the carrier bar 14. As clearly shown in Fig. 1, these rods or stops 54, are arranged upon the carrier bar 14, so that in its reciprocation back and forth first one rod or stop and then the other abuts against the notched side walls of the covering 18, of the cylinder 17. Thus as the cylinder 17, is pawled, the reciprocating movement of the carrier bar 14, is gradually lengthened as the stops 54, in a step by step manner abut against the gradually decreasing contour of covering side walls in one revolution of the cylinder 17. This lengthening of the stroke of the carrier bar 14, determines the shape or configuration of the reinforced portion 55, of a stocking 56, see Figs. 8 and 9, because the thread carriers co-act with a gradually increasing number of needles.

In manufacture, the stocking 56, is of the full fashioned type, the web of which has selvage edges. Before the point designated *a*, in the drawings is reached, the stocking web is knit in a well understood manner. When the point designated *a*, is reached, the carrier bar which has the thread carriers thereon, for supplying reinforcing thread to the needles, which knit the selvage edged web is thrown into action by well understood mechanism. This is so that the reinforce thread may be knit in successive courses, to cause the inner ends of the courses of the heel reinforcement to define a symmetrically curved, but zig-zag-like line, which taken as a whole is inclined to the wales and courses of the web. From the point *a*, to the point *b*—*b*, varying numbers of needles are supplied with thread to form a heel-reinforce inwardly from the selvage edges. During the knitting above described the pawl 29, has been idly engaging the blank tooth 20. The operator with the heel reinforce carriers in operation now manually moves the cylinder 17, so that the pawl engages the tooth adjacent the widest portion of the covering 18. As the cylinder 17, is

pawled the narrower portions of the covering 18, are advanced until finally in one complete revolution of the cylinder and by a step by step movement, the widest part *b—b* of the reinforce has been knit, as of course has been the part *c*, of the stocking. The heel reinforce thread carrier bar is then stopped and pawl 29, now again moves over the blank tooth 20, so that the cylinder 17, remains idle. The foot portion of the stocking is now formed in the well understood method of stocking manufacture and the stocking bottom and stocking back sewn up. If desired, the lever 24, may be entirely removed from contact with its complemental cam 31, by causing the hooked portion of its complemental hand-piece 57, to engage a suitable support 58. The pawl 29, then remains idle.

In the modified form of the invention shown in Figs. 6, and 7, of the drawings, a simplified construction is disclosed. The fashioning cylinder, pawling mechanism and the sprocket chain and its operating mechanism are of the same construction as hereinbefore described although the position of the latter is changed. The mechanism for lifting the pawl 29, free of the teeth of the fashioning cylinder 17, however, is much simplified. As shown in said figures, the mechanism for causing the pawl 29, to be lifted is arranged directly below the heel reinforce fashioning cylinder 17, see Fig. 6. Having fulcrumed relation as at 67, with the bracket 32, which carries the sprocket wheel 38, is a lever 68. The underside of the lever 68, is provided with a lug or projection 59, which lies in the path of travel of the buttons 46, of the sprocket chain 39, so that as a button 46, contacts with the lug or projection 59, the free end of the lever 68, is raised, a spring 60, being present to return the lever to place when a button 46, leaves the projection 59, of the lever 68. Arranged above the fashioning cylinder 17, in any appropriate manner is a pulley 61, and connecting with the pawl 29, and the free end of the lever 68, is a flexible connection 62. Thus, as the free end of the lever 68, is elevated, the pawl 29, is caused to engage the toothed periphery of the fashioning cylinder 17, and as the free end of the lever 68, is drawn to normal position by the spring 60, the pawl 29, is lifted free of the toothed periphery of said cylinder. Otherwise, the construction and operation of parts are similar in all respects to the machine hereinbefore described.

The reinforce 55, fashioned in accordance with either of the above described attachments is of generally tapered, symmetrical contour and may be extended to a considerable height at the back of a stocking without being conspicuous which is obviously advantageous.

What I claim is:

1. In a feed control attachment for straight bar knitting machines making full fashioned stocking webs with selvage edges, the combination of knitting mechanism for forming wales and courses, carrier bars and complemental thread carriers of which at least some of said thread carriers are for supplying heel reinforcing thread, a pattern chain, stop mechanism embracing a unitary structure equipped with a covering, said covering being provided with a central toothed portion and a stepped formation at each end thereof, said stop mechanism operatively disposed in the path of travel of the carrier bar having the reinforce thread carrier thereon for increasing the stroke of said carrier bar to fashion a heel reinforce, the ends of the courses of which define a line inclined to the wales and courses of the stocking web, pawling means for continuously driving said stop mechanism and independent means under control of the pattern chain for limiting said driving means.

2. In a straight bar knitting machine, knitting mechanism, oppositely disposed carrier bars equipped with thread carriers, a pattern chain, a stop member embracing a cylinder having a concentric covering operatively mounted between the opposed ends of said bars the opposite side walls of said covering each having means formed therein of a continuous step-like contour to afford lengthened step by step strokes of said carrier bars, means for continuously driving said stop member, and means under control of the pattern chain for limiting said driving means.

3. In a straight bar knitting machine, knitting mechanism, oppositely disposed carrier bars equipped with thread carriers, a pattern chain, a pattern drum provided with a concentric covering operatively mounted between the opposed ends of said carrier bars, the opposite side walls of which covering each have formed thereon a continuous series of notches of step-like formation to afford lengthened step by step strokes of said carrier bars, means for continuously driving said drum, and means under control of the pattern chain for limiting said driving means.

4. In a straight bar knitting machine, knitting mechanism, oppositely disposed carrier bars equipped with thread carriers, a pattern chain, a pattern drum provided with a concentric covering, rotatably mounted between the opposite ends of said carrier bars, said covering having a toothed periphery and notched side walls of step formation, which notched portions determine the length of strokes of said bars, pawling means for continuously driving said drum and independent means under control of the pattern chain for limiting said driving means.

5. In a straight knitting machine, knitting mechanism including a complemental carrier bar and thread carriers, a stocking heel reinforce fashioning cylinder provided with a concentric covering having a toothed periphery, said cylinder being rotatably mounted in the path of travel of the carrier bar and so designed that in its rotation, the stroke of the carrier bar is lengthened in a step by step movement, a pattern chain, pawling mechanism for operating the cylinder and means under control of the pattern chain for limiting the pawling mechanism.

6. In a straight knitting machine, knitting mechanism including a complemental carrier bar and thread carriers, a stocking heel reinforce fashioning cylinder provided with a concentric covering, having a toothed periphery, said cylinder being mounted for intermittent movement in the path of travel of the carrier bar and so designed that in its rotation, the stroke of the carrier bar is lengthened in a step by step manner, cam actuated pawling mechanism operatively engaging the toothed periphery of the cylinder covering, a tiltable lever, cam actuated mechanism for tilting said lever, and means operatively disposed between the free end of said lever and the pawl for limiting the pawling mechanism.

7. In a straight knitting machine, knitting mechanism including a complemental carrier bar and thread carriers, a stocking heel reinforce fashioning cylinder, having a concentric covering provided with a toothed periphery, said cylinder being mounted for intermittent movement in the path of travel of the carrier bar and so designed that in a complete revolution thereof, the stroke of the carrier bar is lengthened step by step, cam actuated pawling mechanism for operatively engaging the toothed periphery of the cylinder covering, a tiltable lever, an operatively mounted chain provided with projections for successively engaging said lever to tilt it, cam actuated mechanism for operating the chain and means operatively disposed between the free end of said lever and the pawl of the pawling mechanism for limiting said pawling mechanism.

8. A pattern drum of the class stated embracing a cylindrical member adapted for rotation, and a concentric covering therefor, the opposite side walls thereof each having formed thereon means of step-like contour and the peripheral face thereof being toothed intermediate the pair of said step formations.

9. A pattern drum of the class stated embracing a cylindrical member adapted for rotation and a concentric covering therefor, the opposite side walls thereof each having formed thereon means of continuous step-like contour and the peripheral face thereof being continuously toothed intermediate the pair of step formations upon said side wall.

10. A pattern drum of the class stated embracing a cylindrical member capable of being rotated, and a concentric covering therefor, the opposite side walls thereof each having formed thereon a continuous series of notches of step formation and the peripheral face thereof having a continuous series of teeth thereon disposed intermediate said notched sides, one of said teeth being a blank tooth.

11. In a straight bar knitting machine, knitting mechanism, operatively disposed carrier bars equipped with thread carriers, a pattern chain, stop mechanism embracing a unitary structure operative for rotative movement, said structure being equipped with a covering having a stepped formation at each end thereof to afford lengthened step by step strokes of the carrier bars, means cooperatively disposed with respect to said unitary structure for continuously driving the same and means under control of the pattern chain for limiting said driving means.

In testimony whereof, I have hereunto signed my name in the presence of two witnesses.

RICHARD ERNST SCHLETTER.

Witnesses:
WILLIAM J. JACKSON,
AGNES E. CASKEY.

596

Nov. 23, 1926. 1,608,285

M. ZWICKY

LOOP REGULATING MECHANISM FOR FULL FASHIONED KNITTING MACHINES

Filed July 21, 1923 3 Sheets-Sheet 1

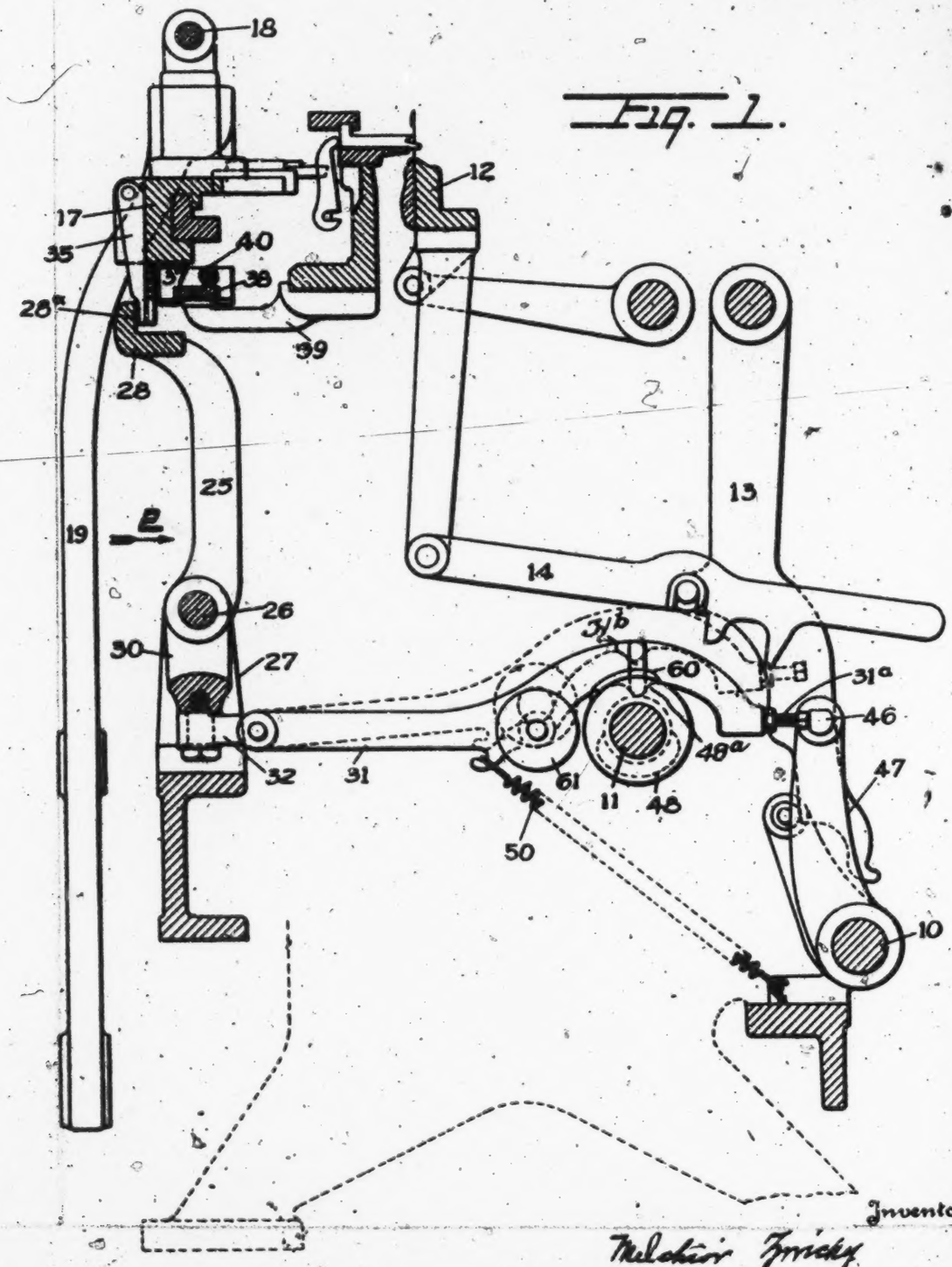

Fig. 1.

Inventor

Melchior Zwicky

By W. H. D. McDewart

Attorneys

597

Nov. 23, 1926. 1,608,285

M. ZWICKY

LOOP REGULATING MECHANISM FOR FULL FASHIONED KNITTING MACHINES

Filed July 21, 1923 3 Sheets-Sheet 2

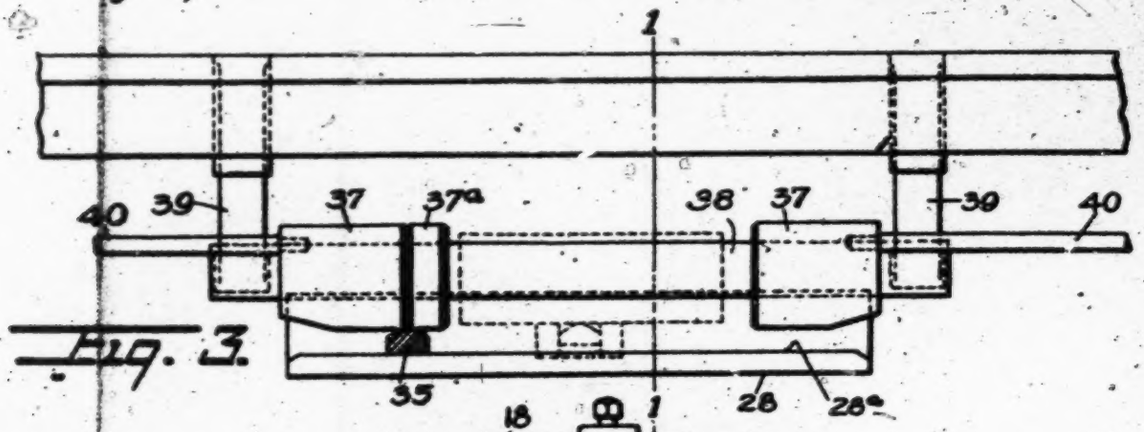

Fig. 3.

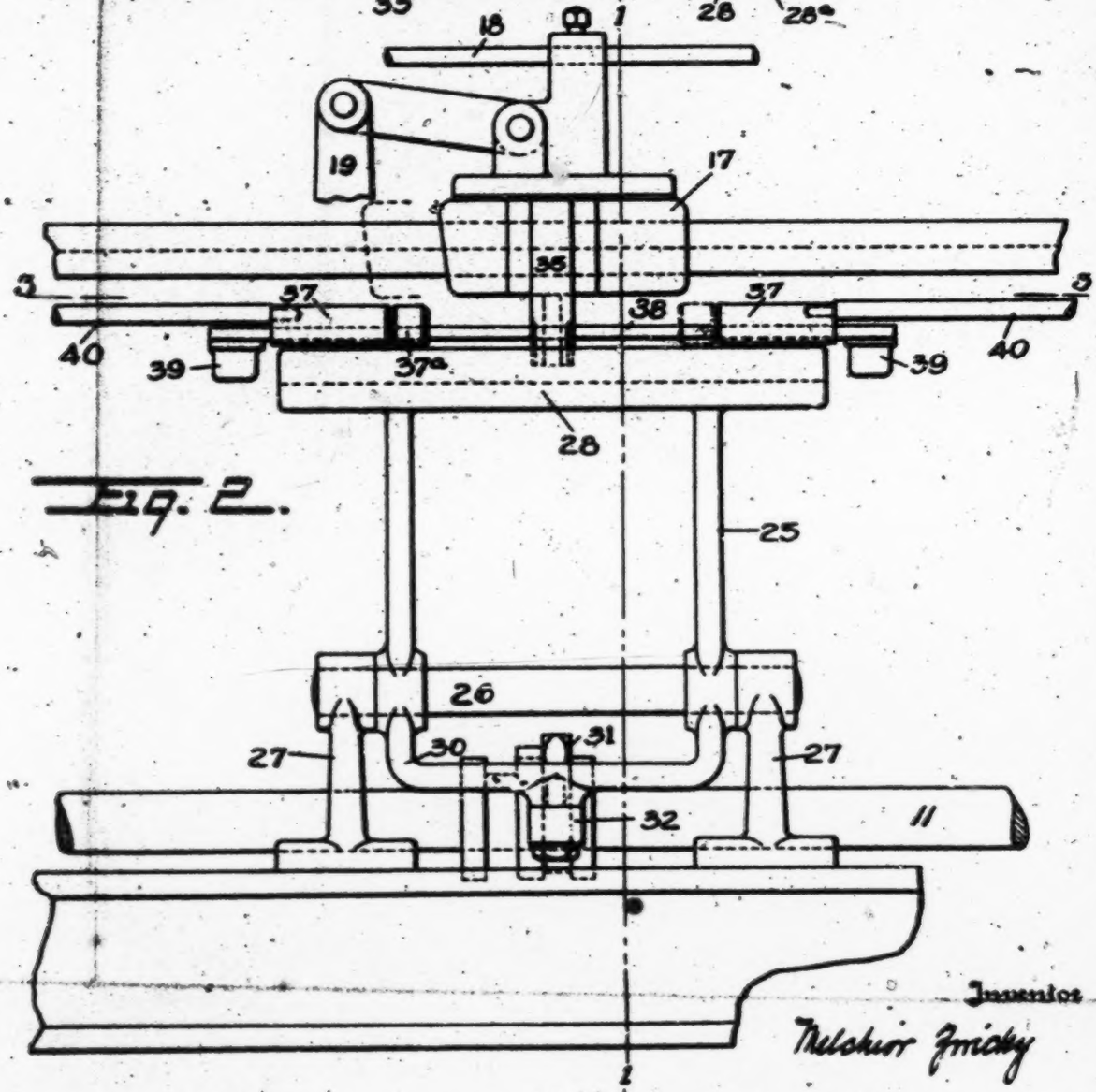

Fig. 2.

Inventor
Melchior Zwicky

By W. Gordon Stewart

Attorney

598

Nov. 23, 1926. 1,608,285

M. ZWICKY

LOOP REGULATING MECHANISM FOR FULL FASHIONED KNITTING MACHINES

Filed July 21, 1923 3 Sheets-Sheet 3

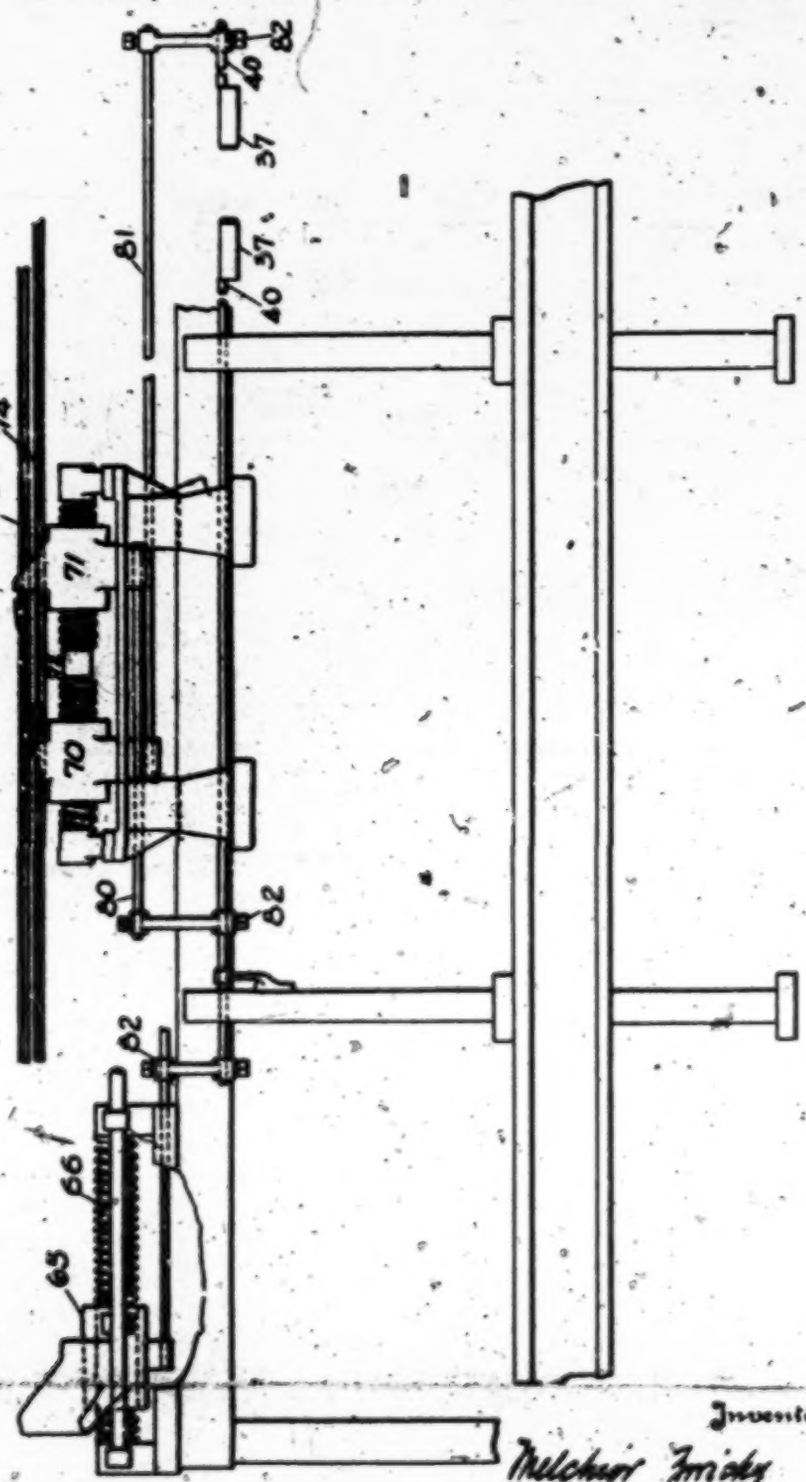

Fig. 4.

Inventor
Melchior Zwicky

By W. H. Whittemore

Attorney

Patented Nov. 23, 1922. 1,[illegible],285

UNITED STATES PATENT OFFICE.

MELCHIOR SWICKY, OF WYOMISSING, PENNSYLVANIA, ASSIGNOR TO [illegible] MACHINE WORKS, OF WYOMISSING, PENNSYLVANIA, A CORPORATION OF PENNSYLVANIA.

LOOP-REGULATING MECHANISM FOR FULL-FASHIONED KNITTING MACHINES.

Application filed July [illegible], 1922. Serial No. [illegible].

My invention relates to full fashioned knitting machines, and particularly to improved loop-regulating mechanism therefor as fully set forth in connection with the accompanying drawings, and the novel features of which are clearly defined in the subjoined claims.

Fig. 1 is a cross-sectional view of a full fashioned knitting machine having my invention applied thereto in preferred manner; the well known machine mechanisms employed being sufficiently indicated to make clear the cooperative arrangement, and the cross-section shown being on the line 1—1 of Figs. 2 and 3.

Fig. 2 is a view looking in the direction of arrow 2 Fig. 1, showing the particular attached mechanism employed to carry out my invention; and Fig. 3 is a corresponding plan view thereof on the line 3—3 of Fig. 2.

Fig. 4 is a partial front elevation of an end portion of the machine indicating one of the usual end narrowing screws and a special yarn-stop screw and carrier rods, with selective connections to my improved loop-regulating mechanism.

The drawing indicates well known needle-bar presser mechanism in connection with which my present invention is illustrated as providing a supplemental operating means adapted to independently effect loop-regulating adjustments for lengthening the loops where a reenforcing or plating thread is used; such adjustments being effected from a longitudinally reciprocated member of the usual yarn-control mechanism, without interfering with the loop-regulating movements ordinarily imparted thereto from the cam shaft.

The known needle-bar presser mechanism indicated comprises loop-regulating shaft 10, to which known cam-determined turning movements are imparted from the cam shaft 11 (as shown for instance in my prior Patent No. 1,417,289, May 23, 1922) and transmitted to the pivotally carried needle-bar 12, through presser lever 13 and connection 14; such known movements being used, as is the supplemental movement provided for by my present invention, for variedly positioning the needle-bar relative to the sinkers, so as to correspondingly vary the lengths of the loops formed in the yarn laid by the carriers. Such incompletely illustrated mechanism is commonly used in "Cotton" machines (Pat. No. [illegible]); as is also yarn-control mechanism comprising the indicated longitudinally reciprocated slide box 17 with its friction-box and 18, operated as usual by the Coulter shaft lever 19 to actuate the yarn-carrier rods and the loop-forming sinkers; and the carrier-rod stop mechanism for controlling the actual yarn travel during ordinary and narrowing knitting. The present invention merely provides in connection with these commonly used mechanisms, additional loop-regulating means as hereinafter fully described.

In the construction indicated the cam shaft 11 is employed as heretofore to control positionings of the needle-bar 12 by means of selectively operating cams thereon, not illustrated; my present invention being adapted to effect additional positionings for slightly increasing the lengths of determined loops which receive an extra yarn, as for instance in forming a determined heel high-splice or a selvage reenforcement.

As illustrated the laying of an extra thread to determined needles only is commonly controlled in well known manner by either the usual narrowing screw nut 65 or special stop nuts 70—71 indicated in Fig. 4, which nuts act to determinedly stop the yarn-carrying rods. Such nuts are also utilized in my improved mechanism to correspondingly control the additional loop-lengthening action which is derived from the longitudinally reciprocated member 17 through my supplemental loop-regulating mechanism.

This supplemental mechanism for utilizing the reciprocating movement of the member 17, comprises, as shown, a supplementary presser-frame 25 carried by a longitudinal pivot shaft 26 mounted in main-frame brackets 27, 27 and provided with a rigid top presser-bar 28, and with a depending portion 30 to which a presser-arm 31 is pivotally connected by means of a knuckle-piece 32; the rigid presser-bar 28 being determinedly operated by said reciprocating member 17 as hereinafter described so as to impart a rocking-movement to the presser-frame 25; which rocking movement is determinedly transmitted to the needle bar 12 by the old regulating shaft 10 and presser lever 13 through my interposed mechanism shown.

The reciprocating slide-box member 17 which I utilize to impart the desired special rocking movements to needle bar 12, is provided with a pivotally carried depending wedge-piece 35, the outer face of which is arranged to slidingly bear against the vertical wall 28ᵃ of the longitudinal presser-bar 28 as shown most clearly in Fig. 1; and this wedge-piece 35 is pressed outward so as to slightly rock the presser-bar 28 as the inner face of the reciprocating wedge-piece 35 is brought into contact with coacting wedge blocks 37, 37 mounted upon a guide bar 38 fixedly supported by center-bed brackets 39, 39. These wedge blocks 37, 37 are automatically adjusted upon the guide bar 38 as described in connection with Fig. 4, and the rocking movement of the bar 28 is transmitted to the loop-regulating shaft 10 and needle bar 12, through a connected arm 31.

The wedge-block devices 37, 37 are secured to separate extension rods 40, 40 which are respectively attachable to the oppositely moving nuts of the yarn-stop screws—as indicated in Fig. 4 and hereinafter further described—so as to be automatically positioned relatively upon their guide bar 38 in accord with the positions of the connected nuts and the yarn-feed fingers controlled by the latter. In connection with the adjustable devices 37, 37 an extension portion 37ᵃ is provided between them so as to be moved to and fro ahead of the depending wedge piece 35 of reciprocating member 17. This extension device 37ᵃ is employed to insure proper cooperation with the usual sinker-operating slur-cock which is reciprocated with member 17; its length corresponding with that of the straight-face part of the slur-cock, and its movement on the guide bar 38 adding such length successively to the respective devices 37, 37 as will be understood to be practically required because of the reverse movements of the slur-cock.

The pivoted presser-arm 31 of presser-frame 25 is provided at its forward end with an adjustable contact point 31ᵃ for engaging the opposed face of a contact stud 46 in the regulating shaft arm 47, to thereby impart a turning movement to said shaft when the presser-frame is raised by the reciprocating member 17; and [illegible] 31 has a projection 31ᵇ which rides upon the periphery of a special cam 48 on the cam shaft 11 so as to hold the point 31ᵃ in raised position above the contact stud 46 excepting when cam depression 49ᵃ permits of its being turned to operative position by spring 50. During the inoperative positioning of the point 31ᵃ the ordinary turning movements may be freely imparted to the loop-regulating shaft 10 from cam shaft 11 (by usual cams not shown); and my special mechanism for imparting additional turning movements thereto from reciprocating member 17 through the pivotally carried member 28 acts only when contact point 31ᵃ is lowered by cam 48 as stated. To provide that this lowering movement may freely occur the arm 31 is preliminarily moved longitudinally by a cam projection 60 on shaft 11; said projection engaging an anti-friction roller 61 adjustably fixed to said arm 31.

The lengthening of the particular loops through which an extra yarn is to be drawn, is effected by correspondingly moving the needle bar 12 rearward for the periods only during which said yarn is being carried to and formed by the determined needles and sinkers; so that it is necessary in utilizing the uniformly reciprocated member 17 to properly effect such periodic movements of the needle bar, to make its movements effective upon the presser-frame 25 only during corresponding periods of each reciprocation; and where the periods are required to vary in different courses, either in correspondence with the narrowing of the fabric as in the knitting of a reenforced selvage edge or in desiredly shaping a reenforcement or plating, it is practically essential that the spacing of the devices 37—37 which effect the lengthening of the loops, be automatically varied accordingly through the connecting rods 40, 40.

In Fig. 4 I have diagrammatically indicated these devices 37—37, in connection with two different ways of automatically adjusting the same through their connecting rods 40, 40. To effect their automatic spacing in accord with the narrowing of the fabric, one device 37 has its rod 40 operatively connected to the usual stop nut 65 on screw 66, while the other is similarly connected to a stop nut at the opposite end of the machine (not shown). If it is desired to effect an automatic adjustment of the loop-regulating devices 37—37 irrespective of the narrowing of the fabric, these devices are connected to independent operating means; as indicated by the reversely traversed nuts 70—71 on the intermittently rotated screw 72; each of these nuts being operatively attachable, (as through rods 80, 81), to the respective devices 37, 37 instead of connecting the latter to the stop nuts 65, as previously set forth. The reversely traversed nuts 70, 71 also control the travel of the extra yarn-carrier rods 73, 74 in well known manner, and either these nuts, or the stop nuts 65 may be selectively used by tightening or loosening the set screws 82, 82 to automatically adjust the devices 37 in accord with the yarn feed.

My invention thus provides for controlling the loop lengths directly from the reciprocating yarn-feed mechanism and in accord with the laying of the yarn, irrespective of the operations effected from the cam shaft

11. The mechanism specifically set forth may be readily modified within the scope of the invention as defined in the claims.

What I claim is:

1. In a full-fashioned knitting machine, the combination with yarn-control mechanism comprising a longitudinally reciprocated member, needle-bar presser mechanism and a rotary cam shaft operative upon the latter; of supplemental operating means for said presser mechanism actuated by said reciprocative member, and a cam on said shaft adapted to determinedly make said supplemental operating means ineffective.

2. In a full-fashioned knitting machine having a rotary cam shaft, yarn-carrier mechanism comprising a longitudinally reciprocated yarn control member, and a needle-bar presser mechanism operative by said cam shaft; supplemental needle-bar presser mechanism operated by said reciprocated yarn-control member.

3. In a full-fashioned knitting machine having a rotary cam shaft, yarn-carrier mechanism comprising a longitudinally reciprocated yarn control member, and a needle-bar presser mechanism operative by said cam shaft; supplemental operating means for said presser mechanism actuated by said reciprocated yarn-control member.

4. In a full-fashioned knitting machine having a rotary cam shaft, yarn-carrier mechanism comprising a longitudinally reciprocated yarn control member, and a needle-bar presser mechanism operative by said cam shaft; supplemental operating means for said presser mechanism actuated by said reciprocated yarn-control member, and cam-shaft means for rendering said supplemental means operative or inoperative.

5. In a full-fashioned knitting machine comprising a needle-bar and presser mechanism therefor, yarn-carrier rods and stop nuts therefor, and a longitudinally reciprocated yarn-control member; a supplemental presser member operated by said reciprocated member, and devices movable with said stop nuts to vary the operation of said supplemental presser member.

6. In a full-fashioned knitting machine comprising a needle-bar and presser mechanism therefor, extra yarn-carrier rods with special stop-nuts therefor, and a longitudinally reciprocated yarn-control member; a supplemental presser member operative by said reciprocated yarn control member, and movable devices for varying such operation connected to said special stop nuts.

7. In a full-fashioned knitting machine, the combination with yarn-control mechanism comprising stop nuts and a longitudinally reciprocated member; of loop-regulating mechanism comprising a needle-bar presser member operated by said reciprocated yarn-control member, and devices movable with said stop nuts to determinedly vary said operation.

In testimony whereof I affix my signature.

MELCHIOR ZWICKY.

DEFENDANT'S EXHIBIT Q

743

A.D. 1837 . . . . . N° 7476.

Machinery for Knitting Stockings, &c.

MATHER'S SPECIFICATION.

TO ALL TO WHOM THESE PRESENTS SHALL COME, I, JOSEPH BIRCH MATHER, of the Town and County of the Town of Nottingham, Mechanic and Setter up of Hosiery Frames, send greeting.

WHEREAS Her present most Excellent Majesty Queen Victoria, by Her Royal Letters Patent under the Great Seal of Great Britain, bearing date at Westminster, the Fourteenth day of November, in the first year of Her reign, and in the year of our Lord One thousand eight hundred and thirty-seven, did, for Herself, Her heirs and successors, give and grant unto me, the said Joseph Birch Mather, Her especial licence, full power, sole privilege and authority, that I, the said Joseph Birch Mather, my executors, administrators, and assigns, or such others as I, the said Joseph Birch Mather, my executors, administrators, or assigns, should at any time agree with, and no others, from time to time and at all times during the term of years therein mentioned, should and lawfully might make, use, exercise, and vend, within England, Wales, and the Town of Berwick-upon-Tweed, my Invention of "CERTAIN IMPROVEMENTS IN MACHINERY EMPLOYED IN MANUFACTURING HOSIERY GOODS, OR WHAT IS COMMONLY CALLED FRAME WORK KNITTING;" in which said Letters Patent is contained a proviso obliging me, the said Joseph Birch Mather, by an instrument in writing under my hand and seal, particularly to describe and ascertain the nature of my said Invention, and in what manner the same is to be performed, and to cause the same to be inrolled in Her said Majesty's High Court of Chancery within six calendar months next and immediately

after the date of the said in part recited Letters Patent, as in and by the same, reference being thereunto had, will more fully and at large appear.

NOW KNOW YE, that in compliance with the said proviso, I, the said Joseph Birch Mather, do hereby declare that the nature of my said Invention, and the manner in which the same is to be performed, are particularly described and ascertained in and by the following description thereof, reference being had to the Drawings hereunto annexed, and to the letters and figures marked thereon (that is to say):—

My improvements in machinery employed for manufacturing hosiery goods or frame work knitting apply to that class or description of machinery well known as the "stocking frame," or what is commonly employed for making stockings, knitted gloves, caps, ladies' scarfs, and such like goods or fabric formed of silk, cotton, or linen thread or yarn, and consist,—

Firstly, in constructing and arranging the various working parts of the machine or stocking frame, so that two, three, or more rows, tiers, or sets of stockings, gloves, or other work may be made or manufactured at one time, one above the other, in the same frame or machine, the working parts, such as the "rows of needles," "thread carriers," "pressers," &c., being multiplied according to the number of rows or tiers of work intended to be made in one frame or machine. The "sinkers" or parts which depress the thread and carry it between the "needles," being also increased in the same way, although they are each formed of one piece of metal and suspended from and worked by one set of "jacks" or levers, with the "jack springs," &c.

Secondly, in improved constructions and arrangements of mechanism or apparatus for conducting, carrying, or traversing the thread across the machine from side to side of the work, with suitable improved mechanism for determining the extent of motion of the "thread carriers," that is, effecting the shortening or lengthening of their traversing motions for the purpose of conducting the thread over a more or less number of "needles," and consequently producing narrower or wider work, as is required for the calf or the small of the leg or ancle of the stocking, together with suitable apparatus or mechanism for effecting the "heeling" of the stocking, or dividing the making the fabric at this time into two, three, or more parts. And, further, in an improved manner or method of supporting the "jack frame," it being supported by means of rocking or pendulous levers so as to allow of its required advancing and retiring motion instead of the ordinary truck carriage running upon the rails or "table bars" as in common. And also in improved mechanism or

apparatus called "pressers," for depressing the beards of the needles and closing them upon the thread at the required time, such pressers being separate or independent from each other, in contradistinction to the ordinary solid blade or presser bar, whereby I am enabled to select any one, two, three, or more of the pressers and throw them out of work and put them in again as required in making fancy goods or worked patterns. And, moreover, I am enabled to apply to the machine or stocking frame the mechanism or apparatus known in the silk loom or weaving of fancy silk goods as the Jackguard box or cylinder with its pierced cards, together with suitable apparatus or mechanism for acting upon these improved pressers in order to throw them into and out of work as required; together with an improved manner, mode, or method of applying the "jack springs" adapted to the jacks or levers which carry the sinkers, for the purpose of obviating the friction and consequent wear in the jacks and other parts by the ordinary mode of adapting the springs, and also preventing the liability of the tails of the "jacks" jumping out of the notches or cramps of the jack springs at the time of the sinkers being depressed, which evil is frequent in the ordinary stocking frame. And,

Thirdly, in the application and adaptation of the above-named mechanism called the Jackguard cylinder or box, revolving with its pierced cards, to the stocking frame or machine, such Jackguard cylinder or box being placed in suitable framework and bearings, with proper mechanism for giving and governing or regulating its motions, the pierced cards being brought opposite the ends of the pressers, or sliding rods, or levers, or fallers connected with and adapted to the said Jackguard mechanism and the above-named presser in such a manner that when the pierced holes of the cards or plates are brought opposite and presented to the ends of the pressers, sliding rods, levers, or fallers, they shall be made to enter the holes by means of suitable springs or mechanism, so as to act in conjunction with particular pressers, and thereby throw them out of work, while the machine or frame is going through its regular and ordinary motions, so as to produce by such withholding of the action of the pressers, fancy work in the piece or goods; at the same time the remainder of the pressers not so acted upon shall go through their regular or ordinary movements and operations, and produce the ordinary work; all of which will be fully understood by inspection of the accompanying Drawings, and the following description of the mechanism, the several Figures being different views of a stocking frame with my improvements applied thereto, together with separate or detached Figures of some parts; the old or ordinary parts of the machine being shewn in outline only, and marked

with capital letters or characters, and the new or improved parts being coloured with different tints over the various parts of different motions; the thread carrier for plain work and its assistant parts being tinted red, those for the side pieces of the heeling operation blue, the pressers and their component parts yellow, the sinkers, jacks, halfjacks, and the jack-springs green, and the parts for suspending or supporting the jackframe brown, and marked with small italic letters and figures of reference. And as the various ordinary working parts of the stocking frame, together with their motions to produce the knitted fabric, are well understood by all practical workmen or competent mechanics, it will not be necessary for me, in describing my improvements, to enter into the detail thereof further than to shew the operation of the same; and I shall, therefore, first point out and name the old or ordinary parts, and then proceed to describe my improved machinery or apparatus connected therewith.

Figure 1 is a front view of a stocking frame, with my improvements applied thereto, shewing the various parts in the situation they are in while the thread carrier is conducting the thread across the machine and laying it upon the needles, and when making plain in one piece as the leg of a stocking, the "thread carriers" for working the two side pieces of the heeling part of the stocking being turned up out of the way of the workman. Figure 2 is a vertical section taken transversly through the machine. Figure 3 is a plan view; Figure 4 is a back view; and Figure 5 is a partial plan view or section taken in the dotted line *a*, *b*, Figure 2, shewing the mode or mechanism of lifting the thread carriers when they are about to lay the thread. Figure 6 is a partial vertical cross section full size, shewing the arrangement of the sinkers, needles, and pressers, and the mode or manner of letting the "thread carriers" fall when they have laid the thread. Figure 7 is a front view of the same. Figure 8 is a partial vertical section of the "jackframe" drawn full size, shewing the "halfjack," the "jackwire" or fulcrum of the jacks, and my improved mode or manner of applying and adapting the "jacksprings" to the "jacks" or levers which support the "sinkers." A, A, is the ordinary framing and framework of the machine or stocking frame; B, B, are two rows or tiers of bearded needles fixed on the needle bars C, C, in the usual manner, they are placed one row above the other so as to make two rows or tiers of work; D, D, are the "sinkers," one half of which (the "lead sinkers") are mounted on the "sinker bar" E as usual, and the other half are jointed at their upper ends to the "jacks" as in common, and for a machine or frame intended to make only one row of work the sinkers would be found like ordinary sinkers, but by my improvements they are elongated for the purpose

of having the other row or second tier of sinkers or hooked depressing parts formed on them for the lower row or tier of work; F, F, are the "jacks" mounted on the jack pin or fulcrum, which is placed in the jack frame G in the ordinary manner; H are the back jack guides or sled; I is the "jack falling bar;" K is the "slur cock" and its slur bar or race; L is the "locking bar" of the jacks; M is the slur wheel for giving motion by bands and pulleys to the slur cock as usual, and also to the thread carriers, and is worked by the treddles N, N, in the usual way.

The Thread Carriers and their Motions and Operations.—The thread carrier for plain work *a*, *a*, are attached to the arms *b*, *b*, which project from the sliding piece or rest *c*, *c*, to which they are attached by hinge joints, as shown in the Drawing; the pieces *c* are mounted upon a triangular (or other shaped) bar *d*, so as to have a free sliding motion along the bar; *e*, *e*, are notched tail pieces projecting from the sliding piece *c*, and when the thread carriers arrive at either end of their motion, the part 1 of these tail pieces comes against the inclined plane 2, 2, on the short tubular pieces *f*, mounted sliding on the rod *g* (see the detached Figure 9), and thereby forces that bar backwards or further from the bar *d*, and thereby releases that bar and the thread carriers by withdrawing the catches 3, 3, from the tail pieces 4, 4, (see Figure 6), when the thread carriers immediately fall below the needles. The bar *g* is supported by brackets 5, 5, from the swinging bar 41. The tubular pieces *f* are embraced by the forked clutches *h*, *h*, attached to the sliding pieces or female screw boxes *i*, *i* (see the detached Figure 10), working upon the male screws *k*, *k*, and it is by these parts that the widening or narrowing motion is effected, for, according to the distance the inclined planes 2, 2, are apart from each other will depend the width of the work, for the thread carriers will be released and fall, and consequently stop laying the thread at whatever point these inclined planes are placed. The notches 7, 7 (Figure 6), are formed in the tail pieces merely for the purpose of allowing them to pass over the hooked pieces 8, 8, which are there placed for the purpose of holding the tail pieces steady while the slur is being taken up. In order to allow of the thread carriers being moved out of the way of the workman, when he wishes to alter or adjust his work, the arms *b* are jointed to the sliding pieces *c*, and are kept in their proper position by means of adjusting screws and springs, as shown in the Drawing. And I would here observe, that the thread carriers for the side pieces of the heels of stockings, or such other parts of work, are merely a repetition of all the parts belonging to those for plain work, and they are therefore marked with the same references, with the addition of an *. These second thread carriers are shown in the Drawings as turned up out of the

way, as when making plain work, they being jointed by the arms b^* to the sliding pieces c^*; but when they are required to work they are turned down into a similar situation as the first thread carrier. All these carriers being supplied with yarn or thread from bobbins or spools placed above in the usual way, the requisite motion of the thread carriers across the machine is obtained from the ordinary slur cock motion by elongating the shafts of the slur cock pulleys, as shewn in the plan view, Figure 3. Upon the end of these shafts are placed the pulleys *l*, *l*, over which shaft is passed the endless cord or band *m*, *m*, which is attached to the sliding piece *c*, upon the angular bar *d*, and thus the requisite and proper motion of the thread carrier is obtained by the workman effecting the slur cock motion, which is the required time for performing its proper operations; but in order to prevent the slur cock or rather the falling motion of the jacks overtaking or following too near the thread carrier, the pulleys *l*, *l*, are larger than the slur cock pulleys, so that the thread carriers are always in advance of the slur cock by means of their quicker motion; and I would here observe, that although I have shewn the pulleys *l* as adapted to drive all the thread carriers, if it may be thought desirable, additional pullies may be worked by the slur wheel for the purpose of driving the heeling carriers only. The angular or other shaped bars *d*, *d*, are attached at their ends to the upper parts of the vertical rods or levers *n*, *n*, which are mounted, turning on fulcrum or screw pin joints at *o*, *o*, on the ends of the lever arms *p*, *p*, of the rocking bars or rods *q*, *q*. These bars are also furnished with centre pins as fulcrums (as shewn in Figures 2 and 5, placed in any convenient manner in the "hanging cheek" of the frame, and have other arms or levers *r*, *r*, projecting therefrom. The ends of these arms are acted upon by other levers or arms *s*, s^*, extending from a sliding bar *t*, placed in suitable guides and furnished with a returning spring at one end, and at the other with an anti-friction roller working against and acted upon by the pieces or tappets *u*, *u*, placed on the side of the ordinary "slur wheel." These arms or levers *s*, *s*, are moved by the tappets *u*, in the direction of the arrow (Figure 5) so as to stand in the way of the ends of the levers *r*, r^*, only at such time as the thread carriers are required to be raised to lay on the thread, and they are thereby kept up during the laying on of the same. *v*, *v*, are inclined plane pieces fastened on to the hanging bars or levers *n*, *n* (see Figure 2), and moving with these bars through staples or guides *w*, *w*, fixed on to the ordinary "hanging cheek" of the frame, and are placed for the purpose of guiding and bringing the thread carriers in their proper motion towards the needles when they are advancing or retiring from them. *x* is a guide or stop piece acting against the edge of the triangular bar *d* of

the thread carriers when the sinkers are down, for the purpose of keeping the thread tight and preventing any slackening so as to make a good and perfect selvage to the piece.

The Narrowing and Widening Motion of the Thread Carriers.—The narrowing and widening of the motion of the thread carriers is effected in the following manner:—The female screws *i*, *i*, work upon the right and left-handed male screws *k*, *k*, which are formed upon the same shaft and turn in proper bearings and centre pins in the framework. Y, Y, is a stationary guide bar, serving for both of the female screws, for the purpose of keeping them in their proper motion, and preventing their turning round with the shaft. Upon the end of the screwed shaft *k* is placed the ratchet wheel 16, which has a partial rotatory motion given to it at the time required, by the following means:—(See the enlarged views, Figures 6 and 7) where this motion is shewn applied to the heeling screw, the ratchet wheel for driving the other or middle work screw being at the contrary end of the machine to that represented in these Figures. 17 is a handle or lever turning upon the shaft, and is furnished with a clawker 18, taking into the teeth of the ratchet wheel 16. 19 is a safety spring pall or ratchet wheel retaining the wheel and preventing any returning motion until it is lifted out of its teeth. When the workman wishes to narrow his work, he has to take hold of the handle 17, and and drawing it towards him, causes the ratchet wheel, by means of the clawker, to turn part of a revolution, and thereby to turn the screws *k*, *k*, and consequently cause the female screw boxes *i*, *i*, to advance towards each other, sliding upon their guide bar y. When the workman has finished a piece of work he releases the pall 19 from the ratchet wheel, and turns the ratchet wheel round by hand the reverse way, and consequently forcing the female screws apart from each other to the full extent ready to begin a fresh piece of work.

The Jack Springs, Jacks, and Sinkers.—The improved manner or method of applying the jack springs to the jacks is shewn best in Figure 2, and at full size at Figure 8. F° is the ordinary half jack turning upon the jack pin as its fulcrum; to the "half jack" is attached the bent arm or lever 10, which carries at its other end the jack spring bar 11, into which the jack springs 12, 12, are fixed in the usual manner. It will be seen by inspecting the Drawings that as the jack springs are placed on an arm attached to the half jack they will make a corresponding motion to the tails of the jacks themselves as they rise and fall during the time the machine or frame is going through its motions, the jack springs rising and falling with the tails of the jacks, and thereby preventing the friction caused by the ends of the jacks rubbing against the ordinary springs. The bent part of the springs at 14

hold the ends of the jacks and keep up the sinkers by pressing upon the top part of the ends of the jacks, but when the sinkers are down the springs keep them in that position by means of the inclined parts 15, 15, of the springs pressing inwardly against the under side or inclined part 16 of the ends of the jacks, thereby keeping them down and preventing them from rebounding; and by avoiding the friction caused by the old or ordinary method of constructing and applying the springs gives much less labour to the workman in working the frame. F, F, are the jacks. D, the sinkers, the motions or movements of which are the same as in ordinary stocking frames, therefore it is not necessary for me here to describe them. The sinkers are elongated for the purpose of having my first improvement applied to them, namely, in order to make the second or lower row or tier of work, and they are furnished with a second or lower guide to move through the same, as is applied to the upper one.

The Pressers and their Motions and Operations.—I shall now proceed to describe the pressers 20, 20, and the method of putting them in motion and operation. They are formed as shewn in the detached views, Figures 12, 13, and are cast into leads in the usual way that guides, needles, and other such other parts usually are, and placed upon the presser rod or bar 21, 21, turning on centre pins placed in the bracket pieces 22, 22, attached to the strong piece 23, which piece supports the lower needle bar C, and is furnished with proper adjusting or set screws 24 underneath the bar for the purpose of adjusting and setting the lower needle bar at the requisite distance from the upper one. To the upper presser bar 21 is connected the bent lever 25, having its fulcrum at 26 in the lever 27, which has its fulcrum at 28. To the other end of the bent lever 25 is attached one end of the link 29, its other end being connected to the lever 27. 30 is an adjustable link piece for the purpose of connecting the two bent levers 25, 25, of the pressers together, and causing the lower one to perform the same motions as the upper one. The lever 27 has its fulcrum in centre pins 28 placed in brackets 32, attached to the bar 33. One end of the lever 27 is connected by the rod 34 to the presser treddle, its other end being attached to the spring 35, which is fastened to the lower part of the framework of the machine or to the floor of the room. By this arrangement of mechanism it will be seen that the two rows of pressers will have the same movements given to them from the presser treddle, and consequently perform the same operations. The points of the pressers which press upon the beards of the needles have a shallow groove formed in them for the purpose of preventing the pressers slipping off from the needles. And in order to prevent the sinkers cutting the work against

the edges of the pressers and indicate to the workman when he has got the work safely over the beards of the needles, the piece 36 is attached to the upper presser bar, and after the work is safely on the beards of the needles, the end of the piece 36, when the workman performs the pressing motion, comes against the hand bar at Q and checks him from drawing the frame further forwards. The work rollers are placed at P, P, and are actuated by weights and cords in the usual manner. In describing the pressers, to prevent confusion I have mentioned only one presser bar to which they are attached in one row, as connected with each row or tier of needles; but it will be evident to all practical workmen that from their nature and form they may be cast in separate leads, or two or three or more upon one lead, with spaces between them, as may be required for different kinds of fancy work, and they may also be fixed upon different presser bars, and acted upon by different cam wheels, levers, or treddles, so as to cause different pressers to come into and out of operation at stated times, so as to produce different patterns of fancy work Also that they may be so mounted singly or independently of each other on one or more fulcrum pins or bars, so that they may be acted upon by levers or other mechanism, and depressed to come into action at the times required and returned by springs or other contrivances placed in conjunction with them. All variations and modifications of which, it is not necessary for me to describe, as any practical mechanic will see their application to these purposes.

Figure 12 shews a side view, and Figure 13 a top view of one lead of these pressers detached.

The Supporting the Jack Frame.—The jack frame, as shewn in the Drawings, is suspended from strong pins at 40, 40, by means of arms or levers 41, 41, attached at the lower ends by pin joints to the jack frame, and at the other to pins 40, which are securely placed in the standards 42, 42, bolted on to the sole bar or framework of the machine. This arrangement of mechanism will allow of a free and easy motion of the jack frame forward and backwards in the machine, without the inconvenience caused by the wear of the wheels in the ordinary way of supporting the jack frame, by running on the sole bar of the common frame. And the same effect may be produced by supporting the jack frame upon rocking levers, having their fulcrum at their lower ends, proper connecting and stop pieces being applied to keep the frame in its proper situation and motions.

Having now particularized the various parts of the mechanism, I will proceed to describe shortly the general operation and working of the same. In the situation of the parts, as shewn in the Drawings (we will suppose the

machine to be making the leg or plain part of a stocking) a course of work has just been completed, and the thread carrier has been raised above the needles in preparation for laying the thread, this raising of the thread carried has been effected at the last motion of the completed course, commonly termed "going over the arch," when the lever tail *r* was brought by the receding of the frame under the arm *s* of the sliding bolt *t*, when the frame rising with its ordinary motion by means of its spring above the lever tail, is kept down, turning the lever arm *p* on its fulcrum in the "hanging cheek" and thus throws upwards the vertical levers *n*, *n*, carrying the triangular bar *d*, and consequently raises the thread carrier above the needles. The parts having arrived in this position, the workman as usual depresses the treddle for the purpose of drawing the jacks by given motion to the slur cock, at which time the thread carrier, by means of its pulley *l* and cord *m*, begins to travel along the bar *d*, laying the thread across the needles in preparation for another course of work; during this motion of the thread carrier, the operation of drawing the jacks has taken place as usual, they following the motion of the thread carrier which has commenced its operation first, by means of the slur cock having a short space to travel on the slur bar before it arrives in contact with the jacks. During this operation of drawing the jacks and laying the thread, the cam or tappet *l*, *l*, has retreated from contact with the antifriction roller of the sliding bolt *t*, which is then forced by means of the spring 43, so as to carry the arm *s* clear of the lever tail *r*, for the purpose of allowing the lever *n* and bar *d* to prepare to fall and carry the thread layer through the needles. Nevertheless, it is necessary that the arm *s* should remain over the lever tail *r* for a short space after the thread carrier has started, in order that the catch 4 may land safely on the hook piece 3, which it cannot do until the part 1 of the thread layer is free from the short tubular piece *f*, when the springs 44 will bring it in safely. The thread carrier having arrived over the space through which it is intended to lay its thread, the tail piece 1 comes in contact with the inclined plane 2 of the short tubular piece *f*, which compels the rod *g* on which it slides to retreat inwardly, which motion of the rod *g* turns the bar 41 upon its centre pin 42, which in so doing throws the hook piece 3 (which is attached by the arm 50 to the bar 41), from under the catch or stop 4 of the slide bar *d*. The hook piece being thus withdrawn from supporting the bar *d*, it descends, and with it the thread layer, carrying the thread between the required needles, the distance that the thread layer shall fall being determined by the adjustable pin 48 and stop piece 49. The workman now sinks the lead sinkers, in doing which the inner part of the fork piece *w* affixed to the "hanging cheek"

comes in contact with the inclined plane v affixed to the lever n, and as the frame descends the inclined plane v forces the lever arm n from the front of the machine, and moves the thread layer forward in order to clear it from the sinkers. The work is as usual now brought forward, and the frame thrown up to the friction trucks 4C, in doing which the projecting piece x, affixed to the locker L, arrives in contact with the bar d, for the purpose of keeping it out when the forked piece n has arrived at a narrow part of the inclined plane v. The workman now depresses the presser treddle which operates as before described, brings the pressers 20, 20, on to the beards of the needles, when the frame is drawn forward, and the work brought over the needles in the usual manner, after which he "sinks the frame," and "goes over the arch," bringing the parts into the position before described, and so on, narrowing the distance between the adjustable stop pieces f to form the requisite shape by means of the mechanism, as before described. During this description of the operation of the machine, I have, for simplicity, not mentioned the effect produced by my improvements in the arrangement of the jack springs, but having before described it, and their construction and combination being particularly shewn in Figure 8, their operation will readily be perceived. The workman having arrived at the instep, the heeling apparatus is brought into operation. To effect this, the female screws i*, i*, and with them their stop pieces f* and f* are brought into the required situation for forming the outsides or narrowed parts of the heels, as at a, a (see the Diagram, Figure 14), and the forked pieces 8**, 8**, adjusted for forming the insides or straight sides b, b. These latter fork pieces are not connected with the screw motion, but are secured to the guide y bar by means of screws, their position not requiring to be varied during the operation of making a stocking. On starting for the heeling the workman places one of the thread carriers over one of the fork pieces 8**, 8**, or that point coincident with the intended strait side of the heel, and the other on the narrowing edge of the other side of the heel, when motion being communicated to the [illegible] they will travel along the bar d*, and that one which is [illegible] towards the outside will strike the inclined plane [illegible] of the [illegible], and thereby throw the lever n* from its support as [illegible], [illegible] will fall through the needles to produce a narrowing. The operation of this part of the mechanism, i. e., the thread layers, is precisely the same as that just described, and as similar letters of reference with the addition of an * are marked on corresponding parts, it will not be necessary to enter into the working of the same. It being understood that as the work proceeds the workman produces the necessary narrowings of the heel or those parts

marked A, A, Figure 14, by shortening the distance between the stops f^*, f^*, and by means of the ratchet wheel and its accompaniments, as before described, the stops f^*, f^*, acting alternately to let the thread carriers fall into the hook pieces 8^*, 8^*, and that the narrowing of the instep or middle part B is effected by the screw boxes *i*, *i*, and stops *f*, *f*, as before described, with reference to the leg. The instep and heeling being completed, the stockings are pressed off at the toes and footed in the usual manner, the thread carriers being brought into operation as before described.

I shall now proceed to describe the last head of my Invention, videlicet, the adaptation of the mechanism, called the Jacguard cylinder or box, with its moving pierced pattern cards or plates to the stocking frame. The outline, Figure 15, represents a partial section of the stocking frame, with these parts of my improvements applied thereto. A, A, are needle bars; B, B, the sinkers; *a*, *a*, the pressers, which are in this case mounted in combs *y*, cast in leads in the usual manner. *x* is a centre pin passing through them and the combs on which they freely turn. At the further extremity of the pressers are tail pieces *b*, *b*, *b*, *b*, *b*, against which the Jacguard cylinder or box is intended to act. *c*, *c*, are connecting links between the top and bottom pressers, to effect the same motion on both tiers when the frame is working with my first improvements, viz., with two or more tiers of operative parts applied thereto. *r* are springs for the purpose of returning the pressers to their upward position. *d* is the Jacguard cylinder or box, turning in bearings in the vertical rod *f*, *f*. *e*, *e*, are the perforated cards or plates passing over the Jacguard cylinder, and from thence to any convenient situation. The vertical rod *f* passes between the stationary parallel guides *g*, *g*. The lower extremity of this vertical rod is connected by a pin to the lever *h*, *h*, which lever turns upon the fixed centre *i*, and is connected at its back end to the presser treddle *c*. *k* is a spring fixed at its upper end to the Jacguard cylinder or box, and at its lower end to any convenient part of the frame. *m*, *m*, is a lever turning upon a fixed centre *n*, and drawn upwards by the spring *o*. *p*, *p*, is a sley for guiding the pressers. The action of the parts is as follows: The workman in the ordinary motion of pressing depresses the treddle *c* as usual, which by its connection with the lever *h*, *h*, will raise the vertical rod *f*, *f*, and with it the Jacguard cylinder or box and its pattern cards, which will then come in contact with the tails *b*, *b*, *b*, *b*, of the pressers *a*, *a*, when those tails which are met by perforations in the Jacguard card or plate will pass freely through such perforations, while those that are met by the solid or unperforated portions of the card or plate will be carried upwards, and their opposite ends perform the usual process of pressing. The effect of this will be, that where no

action is given to the pressers, what is commonly called "tuck fancy work" will be produced. The workman then having brought the work over the beards of the needles and removed his foot from the presser treddle in the usual way, the Jacquard cylinder begins to fall, and is assisted in that movement by the spring *k*, *k*; during this operation one of the pins *p*, *p*, arrives in contact with the top *q*, *q*, when the cylinder will be turned round upon its axis, and having performed so much of a revolution as will bring the point *p*° beyond the centre line, it will be forced round the remainder part of a quarter revolution by the flat spring lever *m*, *m*, which lever will then retain it in an horizontal position, and a fresh card or plate will be presented on the upper surface to be used as before; *r* is a set screw for regulating the fall of the Jacquard box. It will be perceived by inspecting the Drawing that the tails *b*, *b*, *b*, of the pressers are not formed in one continuous line, but are set a short distance from each other for the purpose of gaining space for perforating the Jacquard cards or plates. In order to compensate for the different degree of motion that the pressers would have, owing to their tails being differently situated with regard to their common centre of motion, they are so shortened towards it that their ends shall give an equal pressure upon the needles. It will also be perceived that the connecting links *c*, *c*, are attached to small projecting pieces from the pressers, which may perhaps be thought desirable for the purpose of gaining room for the joint. And I would remark that although I have only shewn one means of applying the principle of this my Invention, it will readily be perceived by all competent persons that many variations may be made in the same without departing from the main object, for instance, the perforated cards or plates may move in a direction lengthways of the machine, receiving suitable and appropriate motions by many mechanical means for bringing a fresh card or plate into operation, and that many other contrivances may be used to effect the motion of the parts which I have described. I would also observe that instead of the ordinary Jacquard, as described above, a barrel with tappets on its periphery or with sunken holes might be used, but in this latter case a separate pressing motion must be obtained to act upon the tails of those pressers which have not sunk into the holes of the cylinder.

Having now described the nature and operation of my improvements, I wish it to be understood that I do not mean or intend to confine myself to the precise shape or form shewn of any of the parts of my new or improved mechanism, as they may be varied to suit the nature of the frame or machine, and the kind of work to be produced, for instance, in a frame of fine numbers I should prefer bringing the stop pieces or inclined planes which determine

the extent of motion of the thread carriers, and consequently the width of the work produced as near as possible to the sliding pieces *c* upon the triangular bar *d* instead of acting upon the end of the tail pieces *e*. And, further, it may be necessary, when a machine is worked very fast as by rotatory or steam power, to strengthen and steady their thread carriers by placing braces or arms, extending from the ends of the pieces *c* to the sides of the middle or lower part of the arms *b*, so as to prevent any vibration caused by the jar of the same when stopping at the end of their motion, all of which will be readily suggested by any practical workman. And, moreover, I do not claim as my Invention any of the working parts or motions of the ordinary machine, although they may appear to be effected somewhat in a different way to that in common; neither do I claim the exclusive use of mechanical thread carriers for conducting and laying the threads across the needles instead of by the hand of the workman, as this has been effected before by certain mechanism or apparatus; but what I claim my improvements and Invention to be, under the first head or section of my improvements, is,—

The constructing, arranging, and forming a stocking frame or machine capable of making or manufacturing two or more rows or tiers of work one above the other, each row or tier having suitable and proper rows of needles, sinkers, pressers, or presser bars, and other parts to perform the same, together with suitable work rollers to take up the work as formed.

And, under the second head, I claim, first, the new or improved arrangement and construction of mechanism herein described, forming the thread carriers for conducting and laying the thread across the needles, particularly the right and left handed screws, and the sliding pieces moving upon and along the angular or other shaped bars *d*, and the mechanism connected therewith for narrowing and widening the extent of the motion of the thread carriers, and consequently the width of the work produced. Secondly, the suspending or supporting the jack frame by means of pendulous or rocking levers instead of the ordinary wheels running upon the sole bar of the common stocking frame. Thirdly, in the construction, application, and adaptation of the pressers placed at the back of the frame, and acting upon the beards of the needles, and as applied to the stocking frame, either in one continuous row, or in different numbers, or singly, together with the mechanism or apparatus for setting them in motion and bringing them to operate upon the beards of the needles. Fourth, in the improved mode or manner of applying and adapting the jack springs to the halfjacks and jacks in the manner and for the purposes herein-before stated.

And lastly, under the third head of my improvements, I claim the applica-

757

A.D. 1837.—N° 7476. 15

Mather's Improvements in Machinery for Frame-work Knitting.

tion and adaptation of the Jacguard mechanism above named to the stocking frame or machine, consisting of the Jacguard box or cylinder, with its pierced cards or plates, or such other moving pierced pattern cards or plates, together and in connection with the suitable arrangement and construction of mechanism for giving it motion and connecting or communicating such motions or movements, by means of the intermediate mechanism, to the pressers in order to produce figured ornamental fancy work or knitted fabric.

In witness whereof, I, the said Joseph Birch Mather, have hereunto set my hand and seal, this Twelfth day of May, in the year of our Lord One thousand eight hundred and thirty-eight.

JOSEPH BIRCH (L.S.) MATHER.

AND BE IT REMEMBERED, that on the Twelfth day of May, in the first year of the reign of Her Majesty Queen Victoria, the said Joseph Birch Mather came before our said Lady the Queen in Her Chancery, and acknowledged the Instrument aforesaid, and all and every thing therein contained and specified, in form above written. And also the Instrument aforesaid was stamped according to the tenor of the Statute made in the fifty-fifth year of the reign of His late Majesty King George the Third.

Hunt, Extra.

Inrolled the Fourteenth day of May, One thousand eight hundred and thirty-eight.

LONDON:
Printed by George Edward Eyre and William Spottiswoode,
Printers to the Queen's most Excellent Majesty. 1857.

DEF Q. p. 16

A.D. 1837 Nov 11. No. 7476.
MATHERS Specification.

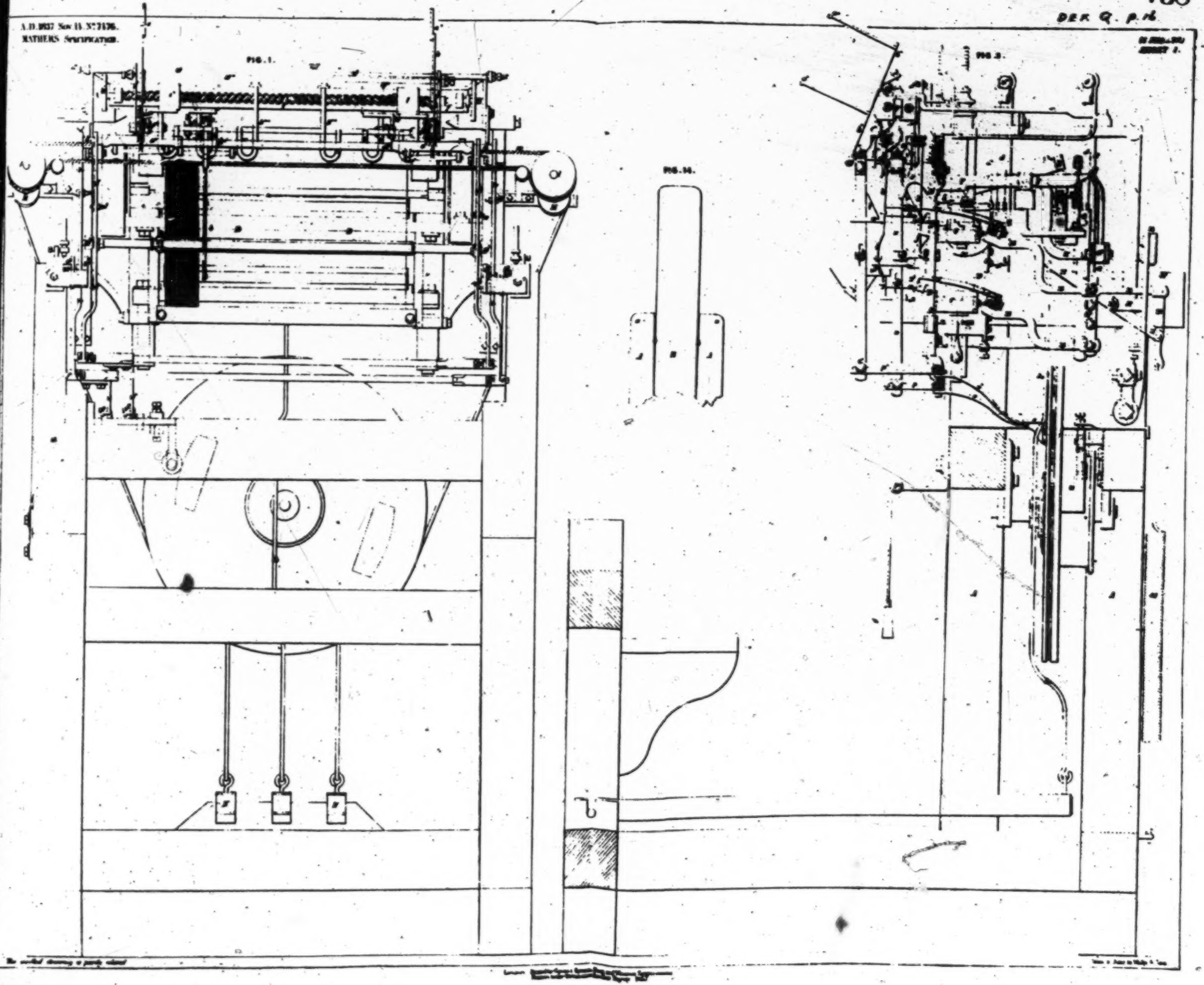

DEF. Q. P. 17

A.D. 1837. Nov. 14. N° 7476.
MATHER'S SPECIFICATION.

15 SHEETS
SHEET 2

FIG. 3.

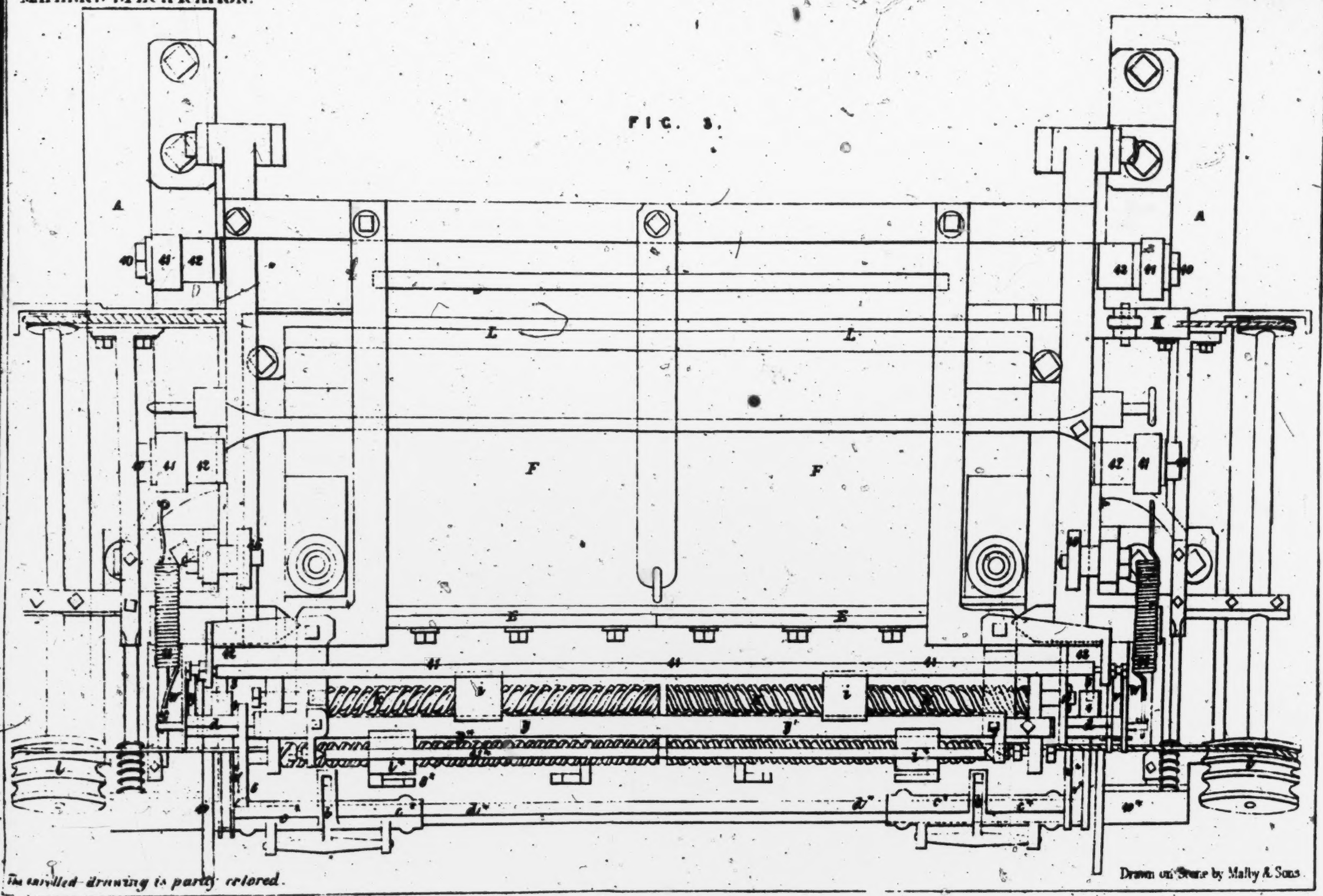

The engrossed drawing is partly retored.

LONDON: Printed by GEORGE EDWARD EYRE and WILLIAM SPOTTISWOODE,
Printers to the Queen's most Excellent Majesty. 1857.

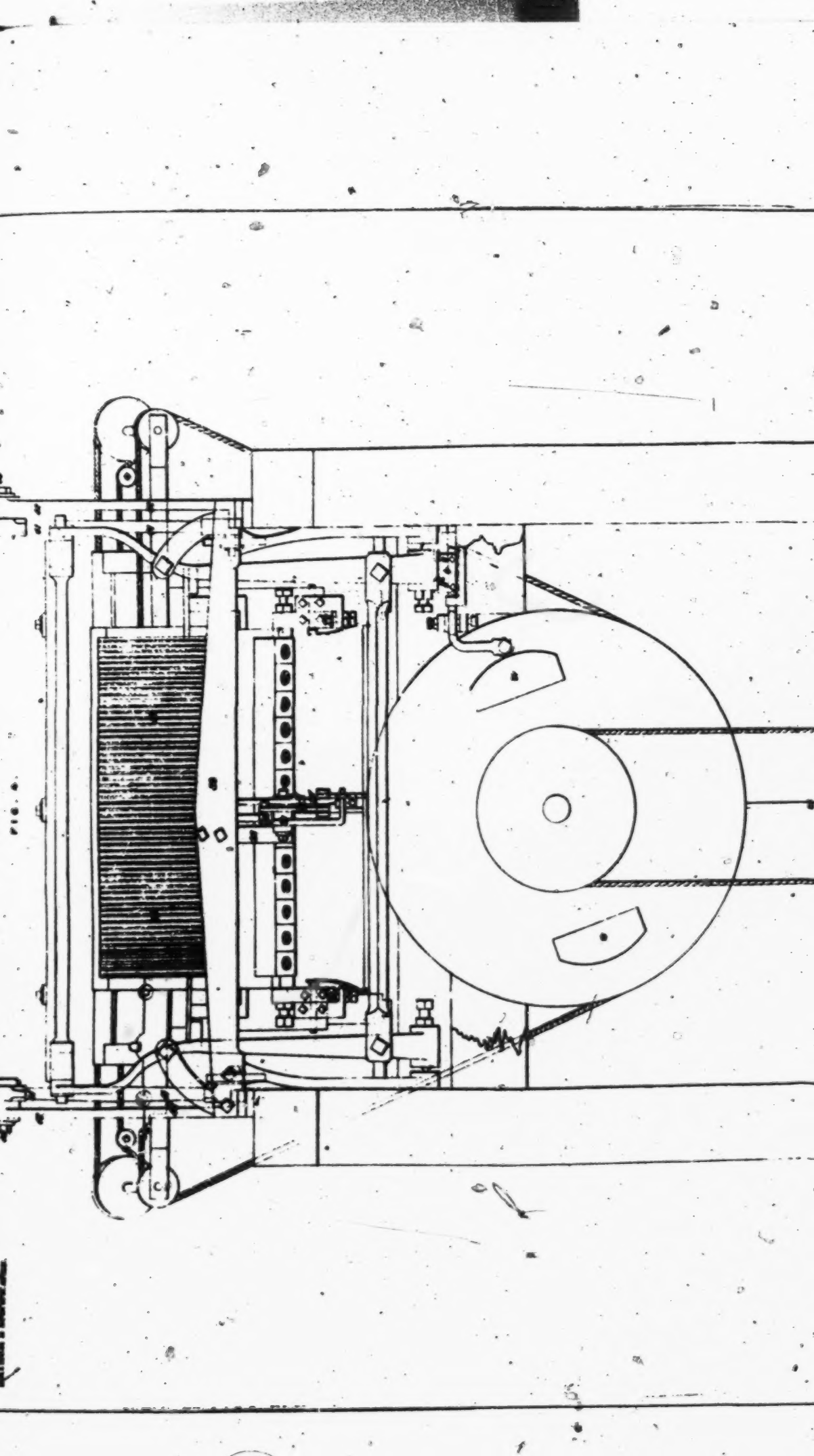

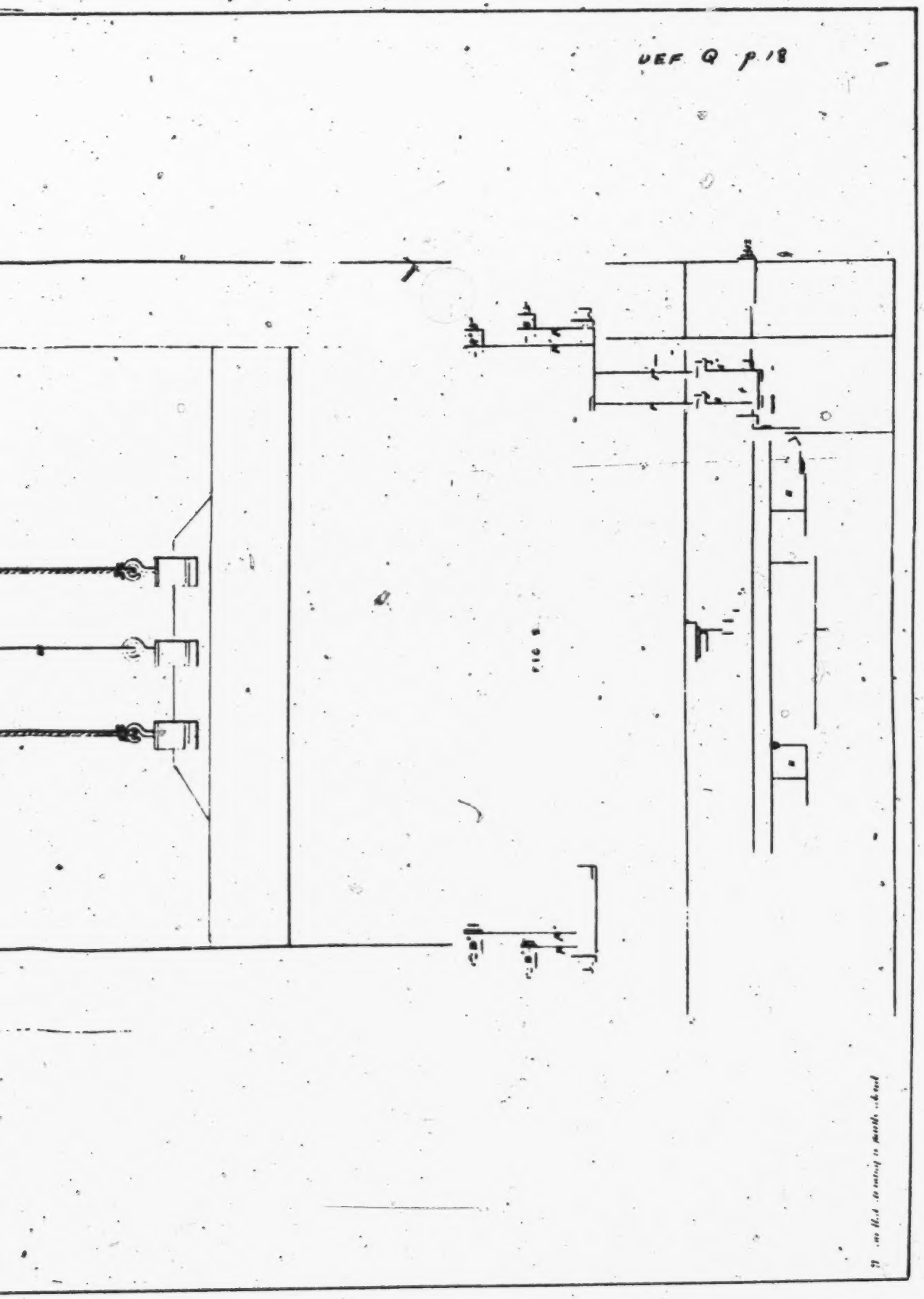
REF Q p 18

A.D. 1837, Nov. 14. N° 7476.
MATHERS' Specification.

DEF. Q. p. 19

FIG. 8.

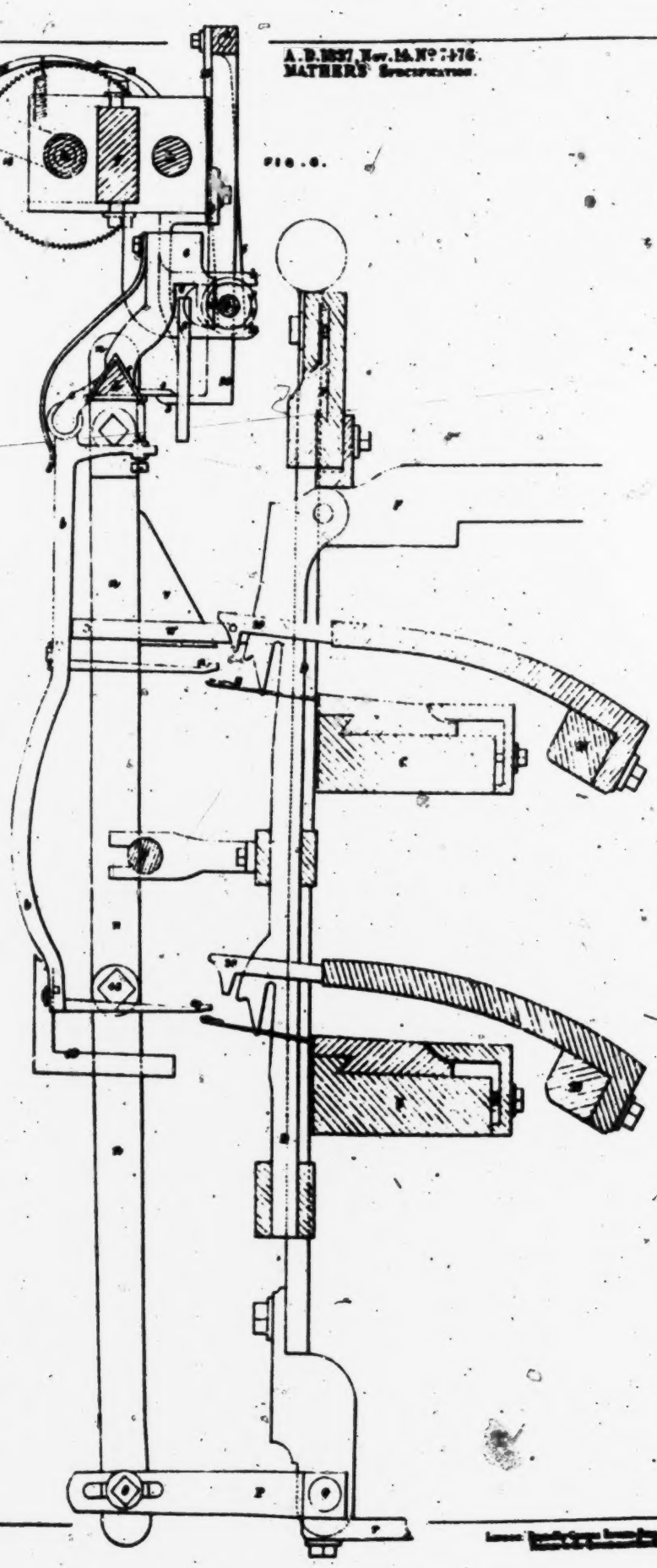

FIG. 9.

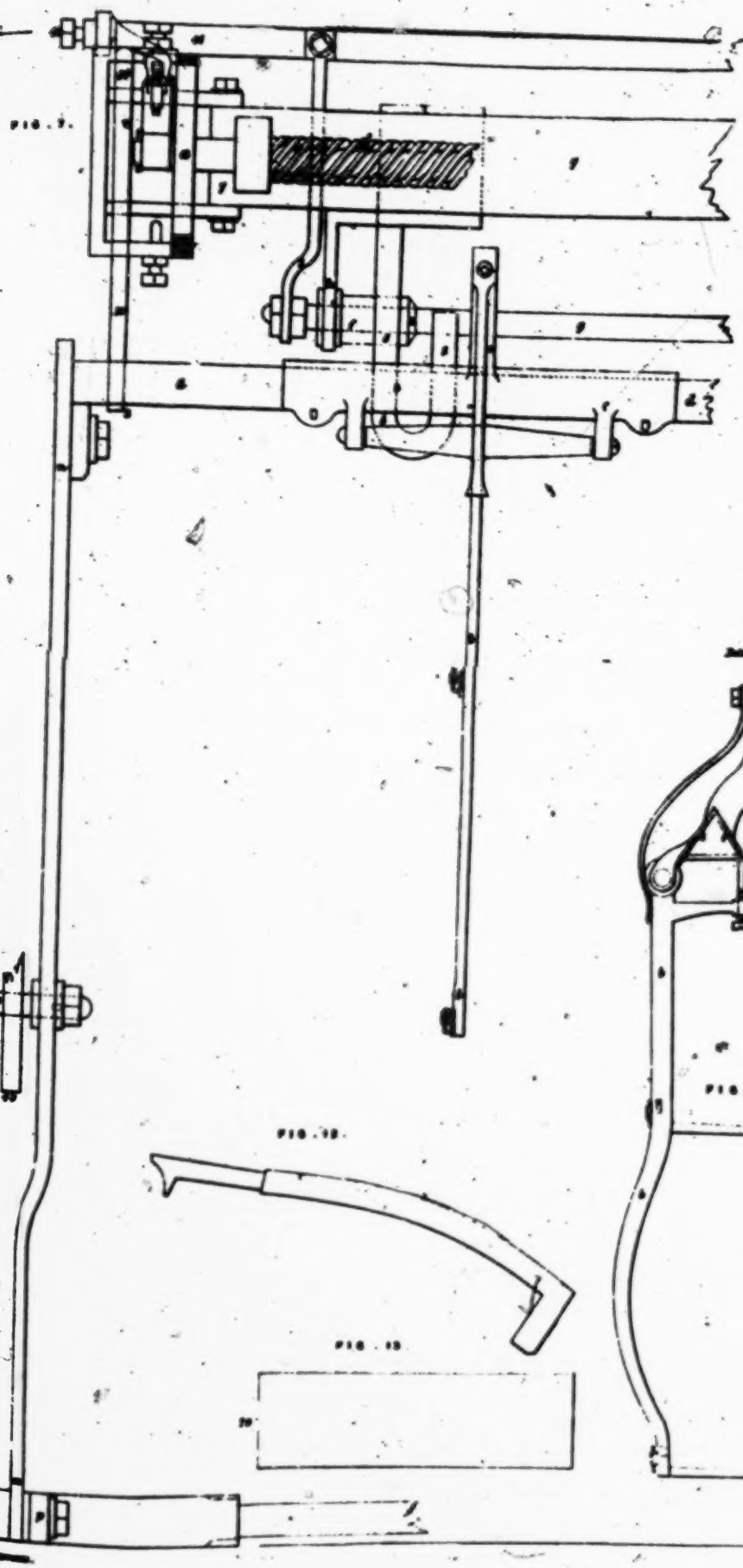

FIG. 10.

FIG. 9.

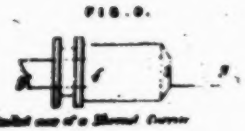

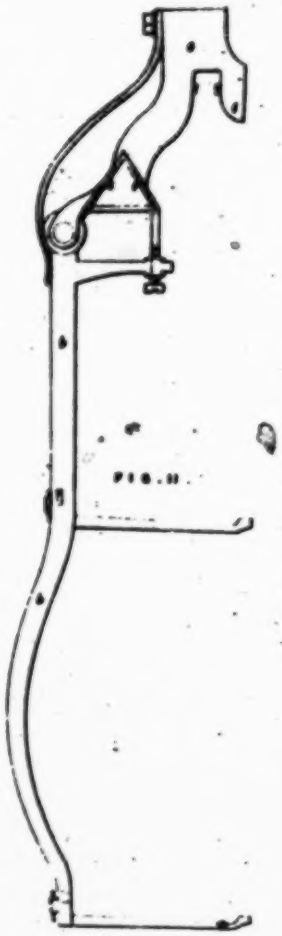

FIG. 11.

FIG. 12.

FIG. 13.

A.D. 1857 Nov 18. N° 2378
MATHER'S Specification

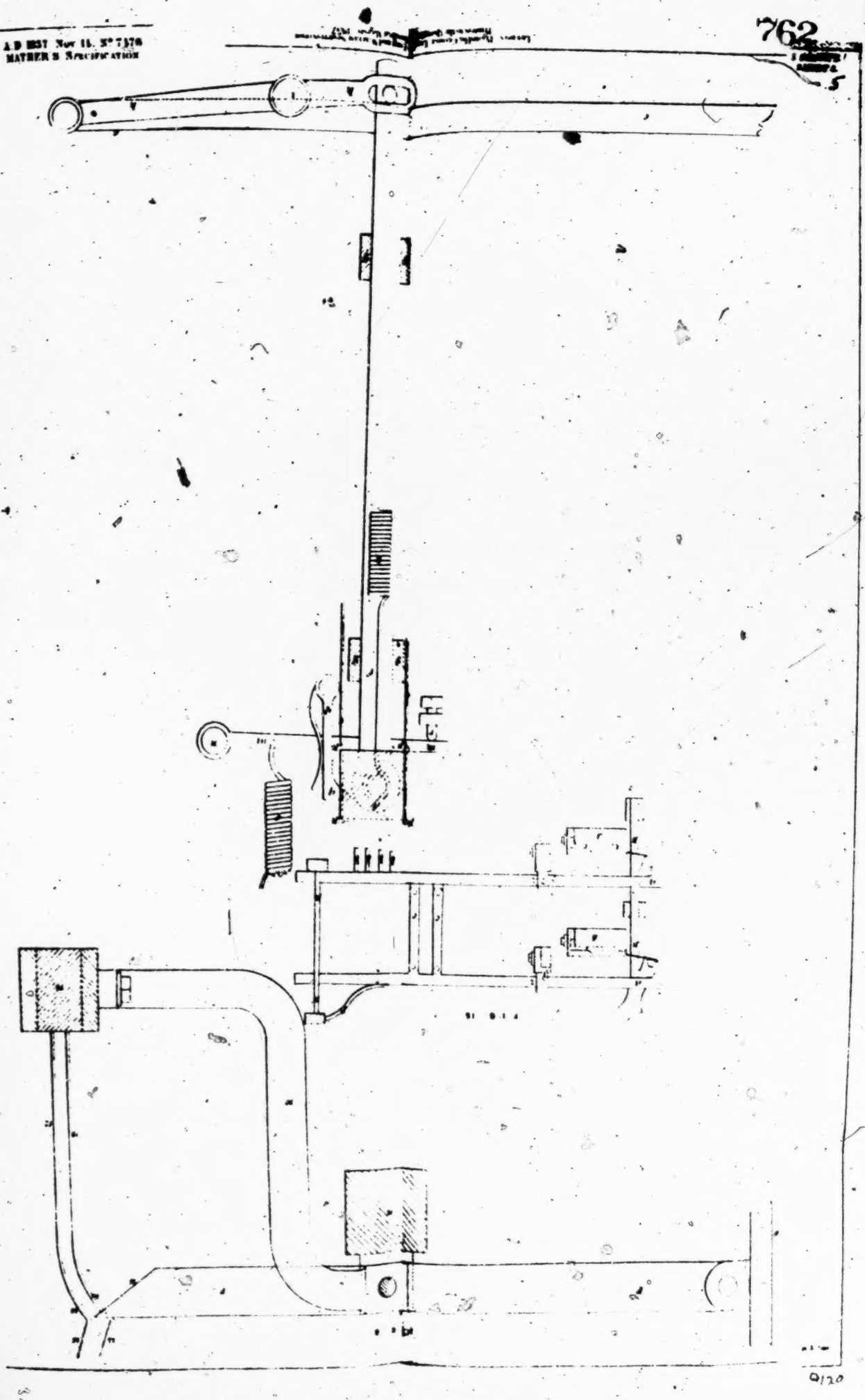

763

DEFENDANT'S EXHIBIT R

Complete Cr. verification.

A.D. 1884.—N° 10,405.

De Pass' Improvements in Straight Knitting Machines.

Improvements in Straight Knitting Machines.

COMPLETE SPECIFICATION.

I, ERNEST DE PASS, of 68 Fleet Street in the City of London, Fellow of the Institute of Patent Agents, do hereby declare the nature of said invention for IMPROVEMENTS IN STRAIGHT KNITTING MACHINES, communicated to me from abroad by La Société Verdier, Moreau et Compagnie, of 5 rue du Conservatoire, Paris, France, and in what manner the same is to be performed, to be particularly described and ascertained in and by the following statement, reference being had to the accompanying drawings, and to the letters and figures marked thereon, that is to say :—

This Invention relates to certain improvements applicable to the manufacture of various kinds of knitted goods and more especially to that of stockings, which, by way of example, is taken in the following description.

The said improvements relate chiefly to the production of fancy knitted goods in several colours, and they also allow of the production of strengthened knitted articles; whether on a stripe on the axis of the web and upon the whole or a portion of this stripe, or upon the parts of the said web situated to the right and left of the said stripe, and upon the whole or a portion of the said parts.

Figs. 1, 2, 3, 4 and 5 (which represent stockings opened out) will give a general and sufficient idea of the results that may be obtained, although the number of possible combinations for each of the knitted articles in question is of course infinite, as will be readily understood on perusal of the present description. In these figures the parts hatched at different inclinations, or cross lined, differ from each other either in colour or in the strengthening.

Thus, in the stocking represented in Fig. 1, a stripe on the axis x, x, of any width, capable of being varied at will, occupies the whole length of the web; this stripe is of one colour whilst the parts on the right and left of the said stripe are of another colour, according as to whether these two last mentioned portions are to be, or not, of the same colour, thus fancy articles in two or three colours could be produced.

In the stocking represented in Fig. 2, the stripe on the axis x, x, only occupies a suitable portion of the length, and at its ends diminishes in the form of a series of steps of variable number; it is of one colour, whilst the remaining portion of the web which surrounds it is of another colour. (The steps referred to may be more or less pronounced and may if desired be merely in the form of almost straight oblique lines).

In the stocking represented in Fig. 3, the portion of the stripe on the axis x, x, (analogous to that of Fig. 2) is strengthened relatively to the remainder of the web surrounding it which gives a stocking strengthened at the knee. To obtain this strengthening it is sufficient to take—not as hereinabove described, yarns of different colours—but yarns of different thicknesses, the thickest being that which forms that part of the stripe situated on the axis x, x. It must of course be understood that the knees of drawers, tights, the elbows of under vests, etc., may also be strengthened in this way.

In the stocking represented in Fig. 4, the strengthening is effected on the parts situated to the right and left of the stripe on the axis x, x, in such manner that

the toe, the sole, and the keel of the stocking (this latter to as great a height as may be desirable) are strengthened, that is to say, formed by thicker yarn, whilst the remaining portion of the web, and especially the portion of the stripe on the axis corresponding to the instep or upper part of the foot, is not strengthened.

In the stocking represented in Fig. 5, strengthening by means of difference in the thickness of the yarns is effected in the same way as for the stocking represented in Fig. 4, except for the part of the sole corresponding to the hollow of the foot, that is to say, for a part of the sole less brought into action than the other parts.

These indications given, with the aid of some examples, the number of which might easily, but without any very great advantage, be multiplied, shew that fancy goods in several colours, and the strengthened goods previously referred to, may be thus produced by means of these improvements by the juxtaposition of yarns of different colours, or of sizes. By means also of these improvements such strengthened goods may also be produced by superposing the yarns.

The machine to which these improvements are supposed to be applied is a Dutch machine of the known type, consequently provided with a saddle furnished with two driving legs. On the frame of the machine are fixed supports of a special form, for the purpose of supporting on the front of the said machine, an inserted mechanism or additional mechanism distinct from that of the so called Dutch machine, this additional mechanism being also provided with its saddle having two driving legs.

In the description hereinafter given of the figures of the annexed drawings, the capital letters designate parts constituting the so called Dutch machine and the small letters the parts constituting the additional mechanism. In all these figures similar letters of reference indicate like parts.

Fig. 6, is a perspective view of the saddle A, of the Dutch machine, and of the saddle *a*, of the additional mechanism, this latter *a*, being provided with an arm a^1, by the aid of which and by three screws engaged at first in the holes a^2, then into the corresponding holes of the saddle A, the two saddles are firmly connected together, and thus united by a common connection are—taken as a hole—hereinafter termed the double saddle A, *a*.

Fig. 7 is a partial elevation of the Dutch machine and of its chief parts, amongst which are indicated the saddle A,—the left slur B, with jointed pawl—the left yarn holder carrier C—the heeler D—the right yarn holder carrier E—the right slur F, with jointed pawl—the bar G serving to raise the tube holders of the carriers C, E—the rack bar J—the grooved bar K—and the counter P, (wheel for pitch chain with its ratchet wheel and tooth of the counter).

Fig. 8 is a side view of these last mentioned parts.

Fig. 9 is an elevation of the additional mechanism which is superposed on the Dutch machine hereinabove referred to. For the purpose of greater clearness, in this figure the bar G of the Dutch machine has been omitted, its supports H, I, being shewn in section. Amongst the parts of the additional mechanism are indicated:—the saddle *a*, connected by means of the arm a^1, and the screws a^3, to the saddle A; the left slur *b*, with jointed pawls; the yarn holder carrier *c*; the right slur *f*, with jointed pawls; the supports *d*, *e*, fixed on the frame of the Dutch machine and supporting all the additional mechanism (excepting however the bar *g* which serves to raise the tube holder of the carrier *c*, the special supports *h*, *i*, of which are, for the purpose in view, fixed on the curved parts of the supports H, I, of the analogous bar G of the Dutch machine). It will be further observed that the supports *d*, *e*, *h*, *i*, are shewn in this figure and in figure 10 (to be hereinafter referred to) as capable of being adjusted horizontally to the right or left any desired extent; the same of course holds good with respect to the parts connected with these supports.

Fig. 10, is a part sectional plan corresponding to Fig. 9, the section being taken through the broken line 1, 2, 3, 4 of Fig. 9.

Fig. 11, is a partial end elevation corresponding to Fig. 9.

Fig. 12 is a general sectional elevation through line 5, 6 of Fig: 9. In this figure the following parts of the Dutch machine are indicated:—at O the needles; at P° the upper plates; at Q° the lower plates. At R R¹, the yarns passing to the carriers are shewn in dotted lines.

Fig. 13, is a part sectional elevation also taken through line 5, 6 of Fig. 9, and Fig. 14 is a sectional plan through line 7—8 of Fig. 13.

Figs. 13 and 14 have more particularly for object to represent in detail the yarn holder carrier *c*.

Figs. 15 and 16 are respectively a front view and a side view of the heeler D, made removeable, that is to say, so that it may, when desired, be placed on the bar J, or be removed from this bar, which is indispensable, as will hereinafter be seen for the working of the improved mechanism in question. This working is moreover assisted and regulated by the action of various flat and spiral springs.

For the production of fancy goods in different colours, the motion being supposed to have been communicated from the left to the right to the double saddle A, *a*, the slur *b*, first raises the driving leg on the right of the added saddle *a*, in such manner that this leg seizes the carrier *c*, at the desired point and carries along this carrier *c*, until the said leg encounters the slur *f*, which at the same time arrests the said carrier *c*, and causes the said leg of the saddle *a*, to escape. In the contrary case, the motion being supposed to have been communicated from the right to the left, the driving leg on the left of the saddle *a*, acts in the same way, but in reverse order relatively to the same slurs *f* and *b*. On these slurs are mounted sliding pieces b^1, b^2, for the slur *b*, and f^1 and f^2, for the slur *f*; these sliding pieces which are in the form of an angular bracket may be fixed by means of thumb screws b^{10}, b^{20}, f^{10}, f^{20} in different positions on the corresponding slurs *b*, *f*, and so as to bring into or out of action, as may be desired, the jointed pawls with which these slurs are provided, viz. b^3, b^4, for the slur *b*, and f^3, f^4, for the slur *f*. These pawls take into teeth formed in the two ends and on the top and bottom faces of the rack bar *j*, supported in the bottom ends of the supports *d*, *e*, relatively to which its position may be regulated, by means of screws j^1, j^2, the thumb screws d^1, e^1, serving to maintain it fixed in the desired position. The jointed pawls b^3, b^4, f^3, f^4, of the slurs *b*, *f*, have joint pins b^5, b^6, f^5, f^6, which project on the inner side and are operated by two grooved bars *k*, *l*, held at their ends by S-shaped pieces k^1, k^2, l^1, l^2; these S-shaped pieces are jointed to the ends of two balance or oscillating levers m^1, m^2, fixed on a horizontal shaft *m* which is supported in the bearings d^2, d^3, e^2, e^3, provided on the supports *d*, *e*; at its right hand end this shaft *m*, is fitted with a hand lever m^4, by means of which a movement of oscillation may be communicated to the balance levers m^1, m^2, which movement has for effect to move away from or draw nearer to each other, the grooved bars *k*, *l*. The lever m^4, which is here taken to be operated by hand, may be equally well operated by means of a counter with pitch chain, or by means of any other auxiliary mechanism of the same kind, an example of which is hereinafter given.

The pawls b^3, b^4, f^3, f^4 carry projecting parts terminating in horizontal pins b^7, b^8, f^7, f^8, which pins ascend (at the same time raising the corresponding pawls) along the slightly curved inclined planes in which the sliding pieces b^1, b^2, f^1, f^2, terminate, when the said sliding parts are caused to advance sufficiently to the right or to the left, this going on until the said pins become engaged in the semicircular recesses provided at the ends of the sliding pieces.

The pawls of which the pins are thus engaged, draw away sufficiently from the teeth of the rack *j*, that they may no longer engage therein. This being understood, let it be supposed that it be desired to widen the stripe on the axis, then the upper pawls b^3, f^3, are put out of action in the manner just indicated, and on the contrary, the lower pawls b^4, f^4, are left free to act, in order that, by reason of the motion communicated by means of the hand lever m^4, to the grooved bar *l*, the slurs *b*, *f*, shall draw away from one another. If, on the contrary, it be desired to narrow the stripe on the axis, the lower pawls b^4, f^4, are thrown out of action,

leaving the upper pawls b^3, f^3, in action, or free to act, and the movements of the grooved bar k, will cause the slurs b, f, to draw towards each other. Behind these slurs b, f, (see Figs. 10 and 13) are jointed the pieces b^9, f^9, the ends of which fall into the working space of the Dutch machine and may there serve as slurs for the driving legs of the saddle A; these pieces may if desired, be brought down in the direction of the arrows, and consequently no longer intervene in the working space of the Dutch machine. It may be observed that the carrier c, is fitted up so as to operate or not, as may be desired, at the same time as the carriers of the Dutch machine, or one or the other of these carriers. For this purpose (see Figs. 13 and 14) it suffices to keep a thumb-screw c^1, screwed up, or to unscrew the same which allows of the end of the carrier being pivoted, and of its being brought down in the direction of the arrow to the position shewn in dotted lines. During the time the stripe on the axis is not being made, the carrier c, the piece b^9, the carrier E, and the piece f^9, are put out of action for entering the stocking, for example, in order to make a passage for the carrier C, which operates by itself in the said entering; it is when this carrier C, thus works by itself that the heeler D, is placed in position to allow of escape being made. The bar n, fixed by its ends on the supports d, e, has only for object to guide and retain the head of the saddle a in its movement, not bearing too heavily on the saddle A and preventing injurious play.

The preceding indications suffice to explain how, by means of the double saddle A, a, and of the three carriers C, E, c, employed singly, or in combination, there may be produced by the juxtaposition of yarns of different colours, or of different thicknesses, fancy goods in several colours, or strengthened in the manner of those shewn in figs. 1, 2, 3, 4 and 5.

I will now indicate how these improvements in knitting machines allow of the production by superposition of the yarns of strengthened knitted articles like those represented in figs. 3, 4 and 5, by employing: 1. A first yarn which works into the whole width of the stocking: 2, a second yarn which produces the strengthening by becoming superposed on the first and which, for this purpose, only works on the part of the stripe on the axis, or on the parts situated to the right and left of said stripe which it is proposed to strengthen.

In order to obtain, by superposition of the yarns, the stocking strengthened at the knee, as shewn in Fig. 3, the pieces b^9, f^9, are let down, the heeler D, is placed in its usual position on the right where it will effect escape and thus all the operations hereinabove indicated for entering the stocking will be repeated except that the carrier c, will be left working at and during the desired time which will consequently work on the part of the web that has to be strengthened at the same time that the carrier C, will work over the whole of the width of the said web. To obtain likewise by superposition of the yarns stockings strengthened as shewn in Figs. 4 and 5, the carrier c is caused to work over the whole width of the web and for this purpose the slurs b, f, are put back suitable distances towards the left and right; the Dutch machine is then arranged as for making the heel, that is to say, with the heeler D placed in the middle of the rack J, of the said machine, and the slurs B, F, of the said machine are so arranged in position that the right and left yarn holders of the carriers C, E, fall into selvage exactly at the same points between the needles as the yarn holder of the carrier c; that is to say, in such manner that the carrier C falls at the same point as the carrier c, at the left extremity of the web, and that the carrier E, falls at the same point as the carrier c, at the right hand extremity of the web.

To effect diminishing the two following methods may be adopted:—1. The slurs b, f, having been brought to correspond exactly with the slurs B, F, these slurs are placed two by two in firm connection with each other so as to form two groups b, B, f, F, this connection being effected by means of rigid connecting pieces, the ends of which are screwed on to the said slurs; these connecting pieces are placed in the same direction and serve the same purpose with regard to the slurs (that of a common connection) as the arm a^1, with regard to the saddles A, a.

Then the spiral springs b^{10}, f^{10}, (one end of which is connected respectively to the slurs b, f, the other end keeping engaged the pawls b^4, f^4, which serve for widening the web) are unhooked in such manner that the said pawls are disengaged from the teeth of the corresponding rack j. In this way these slurs b, f, are upon each diminution, readily placed in suitable position by the action of the Dutch machine itself. 2. The second method of diminishing consists in removing the pieces b^9, f^9, and substituting other pieces also connected to the rear face of the slurs b, f, but are only capable of falling in a direction contrary to that of the pieces b^9, f^9; these new pieces project into the working space of the Dutch machine like those b^9, f^9, and terminate on the side of this machine in escaping surfaces of the same form as those of b, f, in such manner that they serve the same purpose with regard to the saddle A, as the slurs b, f, with regard to the saddle a. Then the end of the handle Q, of the tooth of the counter P, is connected by a connecting rod either to the end of the hand lever m^4, or to that of a lever fixed like this hand lever, on a suitable part of the shaft m.

Having thus described the invention and the means for practically carrying it out, as communicated to me by my foreign correspondent, such invention relating to the production of fancy knitted articles in various colours by the juxtaposition of yarns, as also knitted articles strengthened by the juxtaposition or superposition of yarns, I declare that what I claim is

The employment in combination with a Dutch, or other straight knitting machine, of an additional mechanism carried by the frame of the straight knitting machine and composing as its principal parts:—a saddle—a jointed thread carrier holder—two slurs with jointed upper and lower pawls, provided with means allowing the said pawls being, when desired, placed in or out of action, and with parts capable, when desired, of effecting escape into the working space of the straight knitting machine,—a rack bar provided with teeth on its upper and lower faces—two grooved bars connected together operating the jointed pawls of the slurs aforesaid, either direct by hand or by an intermediate counter, pitch chain or other accessory organs of this kind,—the saddle of the additional mechanism and the saddle of the straight knitting machine being in firm connection the one with the other, as also the lifting bars of the tube holders of the carrier of the additional mechanism: and of the two carriers of the straight knitting machine; the slurs of the additional mechanism being moreover capable, in certain cases, of being connected to the slurs of the straight knitting machine, as also may the special mechanism of the counter of the straight knitting machine be connected to the special mechanism for driving the grooved bars of the additional mechanism, all substantially as herein described and as illustrated in the accompanying drawings.

Dated this 21st day of April 1885.

ERNEST DE PASS,
Fel. Inst. P.A.,
68, Fleet Street, London.

LONDON: Printed by Eyre and Spottiswoode,
Printers to the Queen's most Excellent Majesty.
For Her Majesty's Stationery Office.

1885.

FIG. 7.

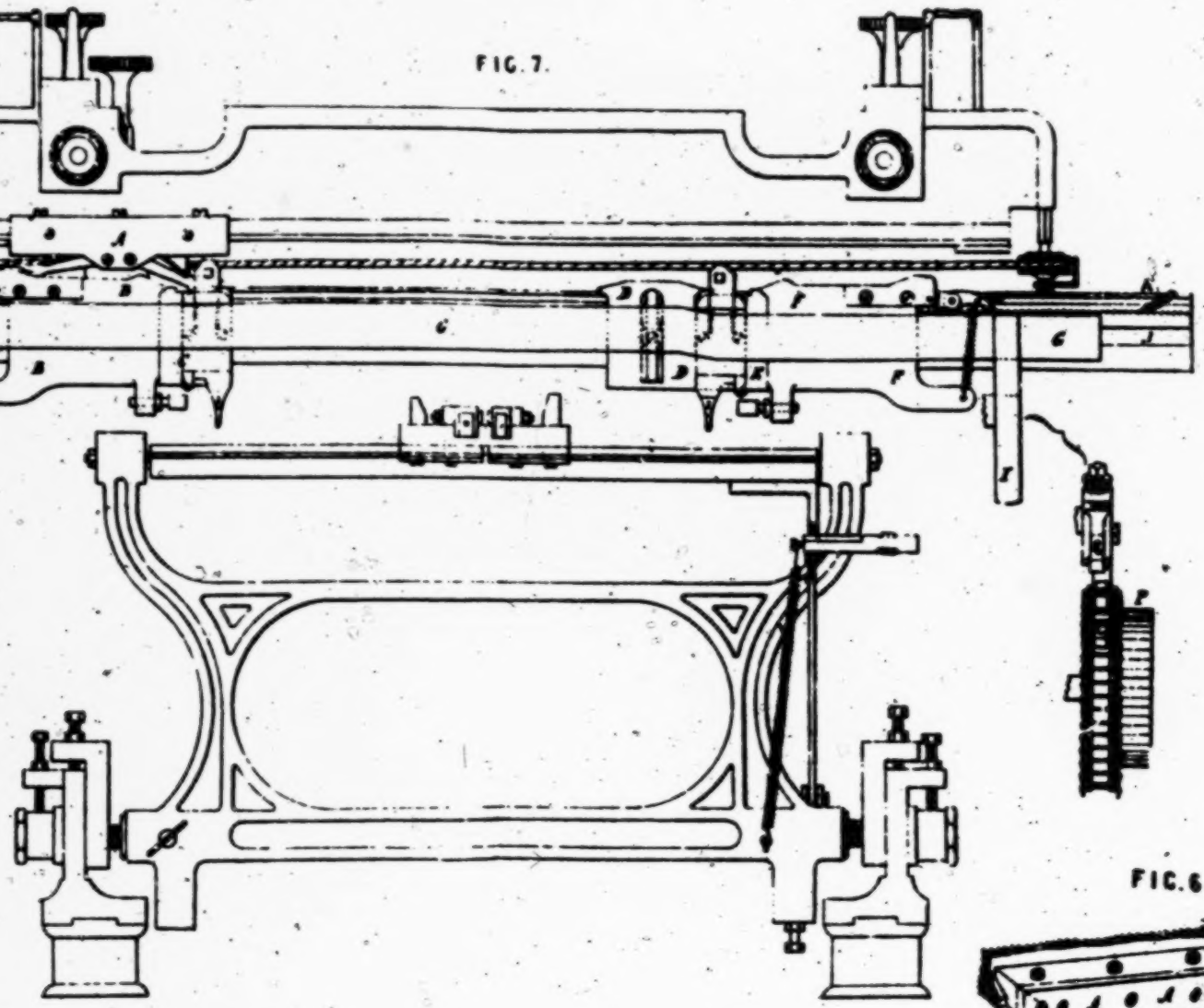

FIG. 8.

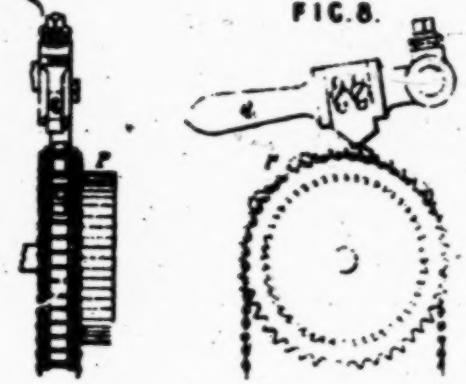

FIG. 1.

FIG. 2.

FIG. 3.

FIG. 4.

FIG. 5.

FIG. 6

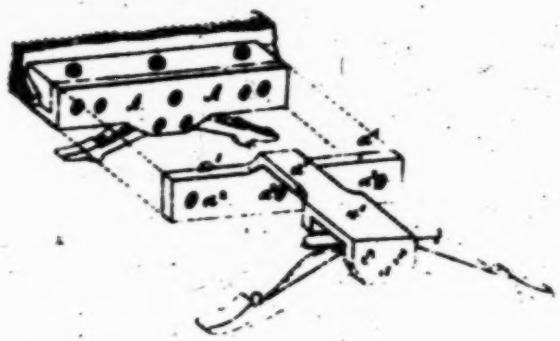

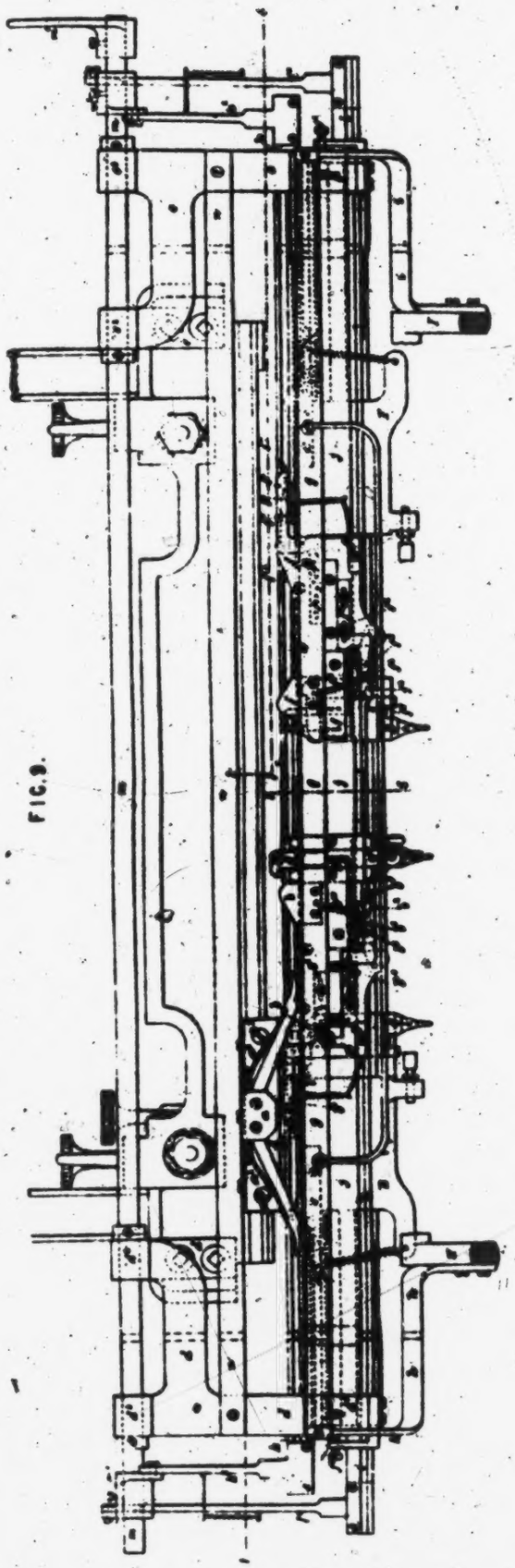

FIG. 9.

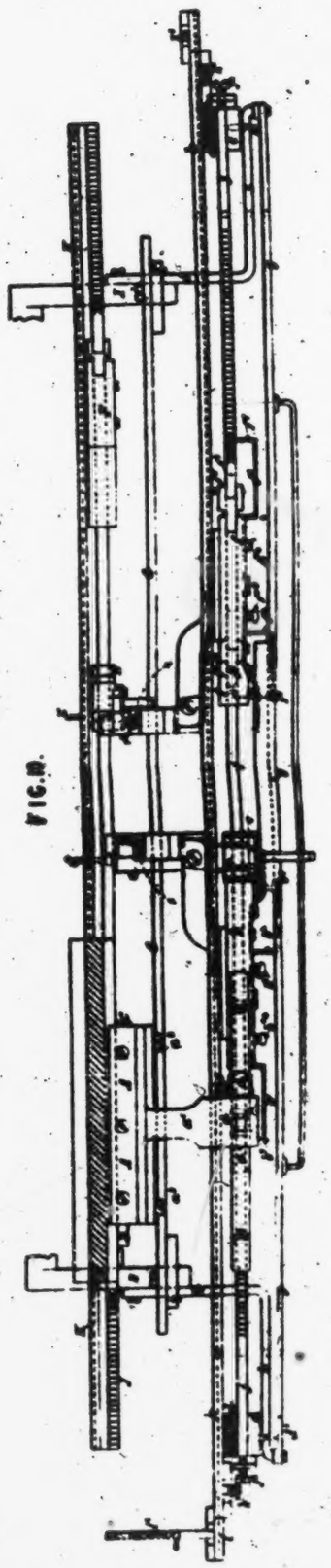

FIG. 10.

Page Tightly Bound

630

740

FIG. 11.

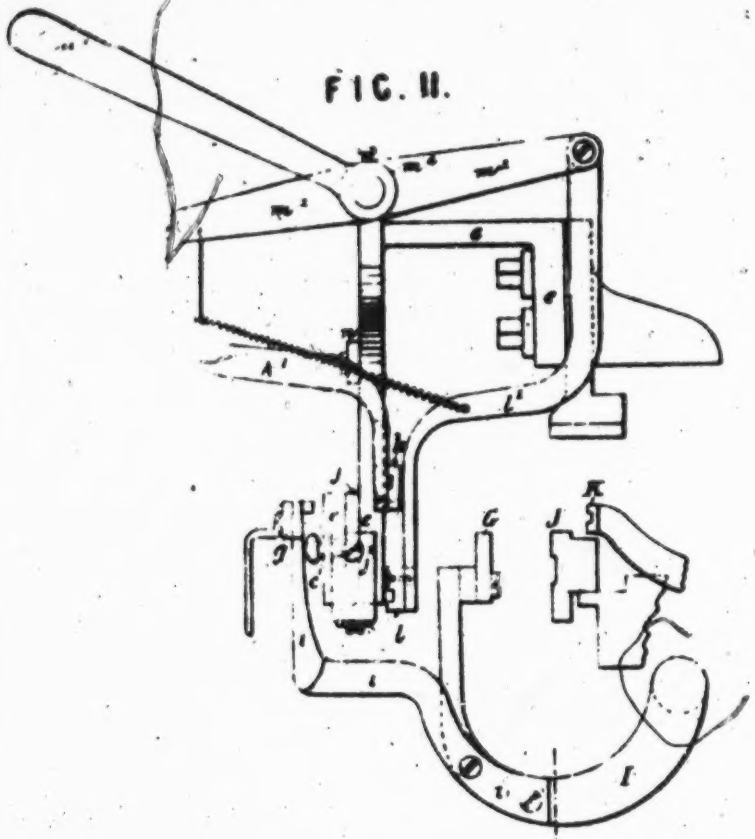

FIG. 12.

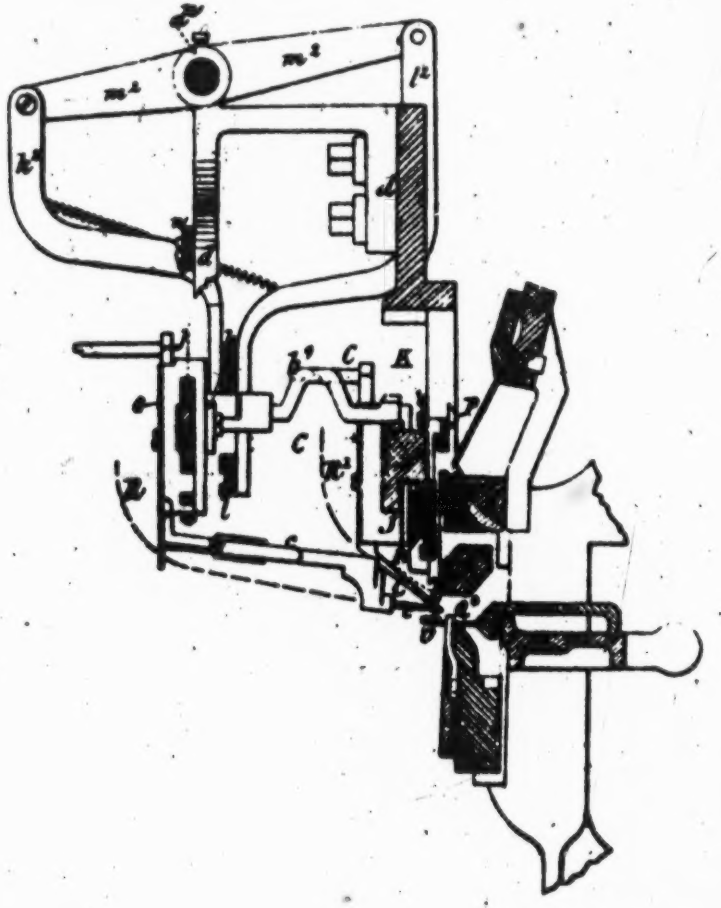

FIG. 13.

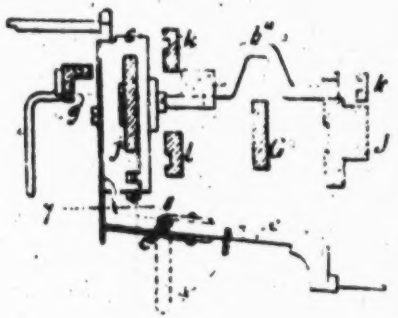

FIG. 14.

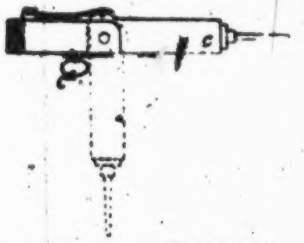

FIG. 15.

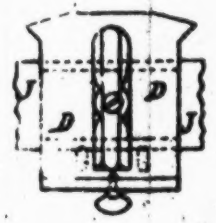

FIG. 16.

DEFENDANT'S EXHIBIT 8 771

narrowing machine at the front of the machine instead of using a snail cam or cams at one or both ends of the machine. This narrowing apparatus consists of worms and nuts carried by brackets. Each worm at one end is provided with a divided disc and a turn-over pawl; both pawls work on the same axis, which is moved by a handle lever or a cam or its equivalent on the machine. The throw of the pawl axis is capable of adjustment by a stop and set screw or their equivalent so that the action of the pawls may be increased or diminished as desired. The nuts on these screws project on one side and act as a stop to restrain the sliding movements of the carrier needle and narrowing apparatus. There is also in front of the machine a bar or rod which slides in bearings; it is moved to and fro by the driving cam and carries a friction key which operates upon the rod to which the carries are secured, moving it to and fro to a regulated distance. The narrowing machine consists of two bars and a number of points sliding on a platform under the carrier bar. The bars are moved and stopped by the projections of the nuts on the screws being held up to the stops by springs or their equivalent. The in and out and rising and falling movements of the points and their bars are operated by hand or by a rod lever and cam on the machine. The falling and rising movements of the carriers are obtained by a lever and cam at the centre or end of the machine. By this machinery or apparatus I produce a fashioned hose which is heeled and narrowed off on the same machine, instead of employing two or three machines for that purpose.

SPECIFICATION in pursuance of the conditions of the Letters Patent, filed by the said Edward Roe in the Great Seal Patent Office on the 23rd December 1869.

TO ALL TO WHOM THESE PRESENTS SHALL COME, I, EDWARD ROE, of the Town and County of the Town of Nottingham, Mechanic, send greeting.

WHEREAS Her most Excellent Majesty Queen Victoria, by Her Letters Patent, bearing date the First day of July, in the year of our Lord One thousand eight hundred and sixty-nine, in the thirty-third year of Her reign, did, for Herself, Her heirs and successors, give and grant unto me, the said Edward Roe, Her special licence that I, the

said Edward Roe, my executors, administrators, and assigns, or such others as I, the said Edward Roe, my executors, administrators, and assigns, should at any time agree with, and no others, from time to time and at all times thereafter during the term therein expressed, should and lawfully might make, use, exercise, and vend, within the United Kingdom of Great Britain and Ireland, the Channel Islands, and Isle of Man, an Invention for "IMPROVEMENTS IN THE MANUFACTURE OF LOOPED OR KNITTED FABRICS AND IN THE MACHINERY OR APPARATUS EMPLOYED THEREIN," upon the condition (amongst others) that I, the said Edward Roe, my executors or administrators, by an instrument in writing under my, or their, or one of their hands and seals, should particularly describe and ascertain the nature of the said Invention, and in what manner the same was to be performed, and cause the same to be filed in the Great Seal Patent Office within six calendar months next and immediately after the date of the said Letters Patent.

NOW KNOW YE, that I, the said Edward Roe, do hereby declare the nature of my said Invention, and in what manner the same is to be performed, to be particularly described and ascertained in and by the following statement:—

My improvements are applicable to the rotary hose frame in which the well known jack sinkers, lead sinkers, and bearded needles are employed, and consist of the following apparatus:—Heretofore to obtain a narrowed looped fabric the carriers or thread layers have been placed above the sinkers and have been operated up n by levers moved by a snail cam or cams. I propose to place the carrier bar in front of the machine; this bar is supported by three brackets secured to the framing of the machine. The carriers are operated by means of a right-handed screw and a left-handed screw, each of which are provided with a notched disk secured to one end; between these disks is a hand lever and reversible pauls, which lever and pauls are operated by the hand, or they may be operated upon by a cam and levers in such manner as to cause widenings or narrowings to be made. The narrowing machine consists of two sliding bars which are held up to the stops by springs in the usual way; these stops are nuts through which the right and left handed screws are passed. The narrowing machine sliding bars slide to the right or left on a bar supported on trucks which slide to and from the needles on platforms carried by the three brackets before named. The to-and-fro movement may be communicated by hand or by a cam

and levers. The carrier needles at each selvage falls below the needles, being supported by the carrier bar which is free to turn in its bearings. The carrier bar is a round rod with a groove planed its whole length, in which groove the carrier needle bar slides. The partial revolution of the carrier bar is effected by a cam and lever at one end of the machine.

The manner of performing my said Invention is particularly described and ascertained in and by the following statement.

Description of the Drawings.

Fig. 1 is a front view of one of my improved rotary hose frames with my improved narrowing apparatus applied thereto; Fig. 2 is a sectional view of the same frame and apparatus shewing the relative position of the several parts when the frame is about to commence a course of work; Fig. 3 is a plan drawn the full size shewing portions of the right and left handed rocking screws, pauls, and disks, portions of the carrier slide bar and carrier bar, and part of the central bracket bearing; Fig. 4 shews in plan portions of the tickler bars with a right and left handed tickler bracket, each carrying ticklers and a point, which I shall refer to more particularly hereafter; Fig. 5 represents in section my improved narrowing and widening machine as applied to the improved hose frame; Fig. 6 is an end view shewing the cam and levers which lower and raise the thread carriers; Fig. 7 is a plan of the frame and narrowing apparatus, the standars of the framing being broken off above the slur cock bar to shew the chains attached to the slur cock sliding bar and the thread carrier sliding bar driver, such chains being operated in a manner more particularly described hereafter. The whole of the cams for effecting the movements of the several parts are shewn the full size on Sheet 5, and are numbered 1 to 7 both inclusive, and will be each referred to in turn, the whole of the corresponding parts being lettered alike where necessary. The following description will apply to each.

My improved frame consists of the following main parts:—Two end standards A and a central standard B connected together by two lower and two intermediate tie bars and one top tie bar, each lettered C; these standars and tie bars form bearings, or bearings are attached to them for the several parts of the machine, and amongst others the following, a web dle bar carrying the brackets of a presser bar I, a needle bar K, a

jack axle bar L, which is hinged to arms attached to a spindle bar L^1; the bar L has brackets attached to it which carry the locker bar M, and other brackets N also afford support for a slcy, through which the tails of the jacks are passed, and two bars carrying springs which press upon the tails of the jacks. O^1 is a shaft carrying the cams which give the required movement to the several parts. The cam shaft has a toothed wheel on its left end, which gears into another toothed wheel driven by a third toothed wheel on the handle shaft which carries a fly wheel and a fast and loose pulley for a belt from any prime mover. The parts known as the frame are a front spindle bar E lying in bearing arms attached to a back spindle bar F; to the front spindle bar are attached three vertical arms to which are secured a sinker bar G and a face bar or work bar H; the bar G has secured on it the frame sinker leads G^1. There is a bar at the back of the work bar, and in the space between these bars the lower ends of the lead sinkers G^1 and jack sinkers H^1 lie. The above-named parts being of the usual well-known construction will not require further description. The parts constituting the frame heretofore has been sunk by attaching a connecting rod or link to each end of the frame spindle bar E, thereby causing the said bar to spring or buckle in the centre when lowered by such links being operated upon by the sinking cam. Such plan I improve upon by obviating any tendency of the spindle bar to buckle or spring by attaching to the under side of each of the end bearing arms a knuckle joint D hinged to the top of a connecting rod having its lower end attached to a lever D^1 carrying a truck operated upon by the sinking cam, so that the pull acts direct under the bearings, which are themselves lowered instead of being pressed down by the spindle bar E.

A second improvement consists of the employment of snapping tackle constructed as follows:—To the front of the top tie bar are secured two projecting brackets P, the front ends of which carry an axle rod having on each projecting end a thread guide P^1. The axle has an arm secured on it hinged to a connecting rod P^2, which rod has its lower end attached to a lever operated by a cam No. 7 above the axle in the brackets P. Lying over the thread guides P^1 are two arms P^3 which are bent at right angles at their outer ends, where they are wrapped or covered with some soft material. These arms when pressed upwards turn in their bearings and will fall by their own weight or to stops placed to stay them in the position seen in Figure 2, the thread from the cop being passed through

the hole in the thread guide P^1, and thence through the holes in the carrier needle. The above-described snapping tackle will act in the following manner:—Each course the frame makes the thread which is slackened by the carrier needle being lowered and then raised by the cam No. 1 is tightened by the guide P^1 being pressed up to the covered part of the arm I^2, the thread being nipped between them, and while so nipped the guide P^1 and arm I^2 are slightly raised by the operation of the cam No. 7.

My third and main improvement consists of an apparatus for narrowing and widening the fabric. Heretofore to obtain a narrow looped fabric the carriers or thread layers have been placed above the sinkers, and have been operated upon by levers moved by a snail cam or cams, instead of which I attach three brackets R to the front of the machine. The upper ends of these brackets have bearings attached to them in which a carrier bar Q is free to turn; this bar is round with a groove planed in it its whole length; in this groove the carrier needle bar Q^1 slides. To this bar are secured the carrier needles Q^2. The carrier bar Q lies at the right end of the frame in a fourth bearing screwed to the front of the right end standard A; close to this bearing the bar Q has a lever Q^4 secured to it hinged to a connecting link having its lower end hinged to a bent lever Q^5 carrying a truck, which is operated upon by a cam No. 1, which causes the carrier needles to be raised into the position shewn at Figures 2 and 5. During its passage while laying the thread between the sinkers and the top of the needles, the carrier needles being then lowered under the needles previous to being raised for working another course, a spring Q^6 is attached to the lever Q^5 and to the end standard A to hold the truck to the cam. The traverse of the sliding bar Q^1 is effected in the following manner:—There is a collar placed so as to slide freely on the bar Q, which collar forms part of or may be attached to a short arm S^{13} which is screwed to the bar Q^1. Attached to the bearings on the central bracket R and right-hand bracket R is a flat bar S^5, on which a box S^6 slides; this box has a projection in front which carries on its under side a stud S^7, to each side of which a chain S^{14} is attached, which chain passes round a pulley S^8, two other pulleys U, and round a drum V, which makes an alternately reversed partial revolution. This drum with a similar drum W for driving the slur cocks is fully described in the Specification of a Patent granted to me for improvements and additions in or to the

machinery or apparatus for the manufacture of looped or knitted fabrics, and also of warp and weft fabrics, dated October Fourteenth, One thousand eight hundred and sixty-nine, and numbered 2999, such movements of the drum causing the box S^6 to slide alternately to the right or left. The upper side of the box carries a stud on which two drivers S^9 turn; each driver is held by a flat spring in the position shewn on plan at Fig. 7, so that as the box is moved to the right or left one of the drivers will catch the arm S^{13} and carry it along with it until such driver is thrown clear of the arm by the inclined end of the driver sliding over one or other of the trucks S^{10} or S^{11}, thereby allowing the driver to pass the arm S^{13} and the other driver to engage with the opposite side of the arm ready for the return motion. The truck S^{10} is supported by an axle secured to a stop S^{12} screwed on the top of a stop nut S^1 which traverses a screw at the right of the centre of the frame. The truck S^{11} is supported by an axle at one end of a rod, having its other end secured to a stop S^{12} screwed on the top of a stop nut S^1 which traverses a screw at the left of the centre of the frame. The stop nuts S^1 are advanced towards or moved from each other when they are required to move simultaneously in the following manner:— One of the screws S which passes through the stop nuts is a right-handed screw and the other a left-handed screw, each of which is provided with a notched disk S^3. At one end between these disks is a hand lever and two reversible pauls S^4, each of which take into the notches of one of the disks, so that suppose the pauls point upwards and the handle is raised up so as to rack the disk, the stop nuts S^1 will be moved away from the centre for the purpose of widening the fabric, and if the pauls be reversed and the handle depressed to rack the disks the stop nuts will be moved towards each other for the purpose of narrowing the fabric. Each of the stop nuts have a projection on their lower side to which a clip is screwed which embraces bar S^5, which prevents the stop nuts from being carried round with the screws when they are racked. The bars S^5 are secured at each end to the screw bearings which are attached to the brackets R. The traverse of the carrier needle sliding bar is stopped at each end by a short arm Q^1, shewn by dotted lines in Fig. 2, and another arm Q^2, shewn in a lowered position at Fig. 5, each of which strike against one or other of the stops S^{12}, so that the position of these stops determine the length of traverse of the carrier needles to form the selvages either in widening or narrowing, and by the same means the tickler bars are operated, being arranged as

follows:—A bar T is grooved out to allow of two bars T^1 and T^2 to slide therein, being held down on the bar T by caps, one of which is seen in plan at Fig. 4. The bar T is supported on trucks T^3 which run upon platforms T^4 carried by the three brackets R before mentioned. To each sliding bar are secured the requisite number of brackets, which carry a number of ticklers T^5 and also one point T^6 to each brackets. The bars, brackets, ticklers, and points are moved to or from the needles by the operator, or such to-and-fro movement may be communicated by a cam and levers. The relative distance the brackets stand from each other is determined by the position of the stop nuts S^1, to each of which is attached a stop bar and spring T^7 which lie upon each side of a stud in each of the tickler bars T^1 and T^2. Such stop and spring is shewn in side view at Fig. 5, and in plan at Fig. 7.

The cams which effect the combined movements of the several parts are shewn in Sheet 5; No. 1 being the cam which operates the thread carrier needles; No. 2 is the same as No. 9, and are the frame sinking cams; Nos. 3 and 8 are alike and operate the presser bar; No. 4 and 5 move the hanging frame to and fro; No. 6 is the locking cam and operates the locking bar; and No. 7 operates the snapping tackle.

Having described the several parts of my improved narrowing and widening apparatus, I will describe separately, first, the operation of narrowing the fabric, then that of widening the fabric.

The narrowing is performed in the following manner:—The movements of the frame having brought the loops forward to the eyes of the needles the ticklers are pushed towards and placed upon the beards of the needles and slightly depressed, the loops are brought by the frame into the ticklers and clear of the needle heads, the right and left threaded screws being then racked by the pauls of the hand lever carries the said loops and places them on the next adjoining needles or otherwise, the frame takes the loops past the beards on to the stem of the needles, so that the next motion of the frame will secure the loops, and the fabric will then continue to be made in the usual manner until the above-described movements are required to be made for the next narrowing.

For widening the fabric, in addition to four or other number of ticklers used in each bracket when narrowing the fabric, I also use a plain point T^8, see Fig. 4, which lies by the side of the ticklers on the inside and is moved to or from the needles, and is racked to the right or left

at the same time as the ticklers by the operator at each widening in the following manner :—The ticklers and points being placed on the needles, as before described, the loops are brought forward into them by the frame, the ticklers and points are slightly raised so as to keep the loops on them above the needles until they are racked outwards, they are then placed on the needles, the frame moves forward and takes the loops back past the beards of the needles, and upon the frame again advancing a loop is placed upon the whole of the needles, thereby filling up the hole which would otherwise be produced if performed by the method heretofore used.

Having now described the nature of the said Invention, and in what manner the same is to be performed, I declare that what I claim is, the arrangement and combination of parts of machinery to produce narrowed or widened looped or knitted fabrics, as herein-before described.

In witness whereof, I, the said Edward Roe, have hereunto set my hand and seal, this Twentieth day of December, in the year of our Lord One thousand eight hundred and sixty-nine.

EDWARD ROE. (L.S.)

Signed, sealed, and delivered by
the within-named Edward Roe,
in the presence of

SAMUEL PARSONS,
Solicitor,
Nottingham.

LONDON:
Printed by GEORGE EDWARD EYRE and WILLIAM SPOTTISWOODE,
Printers to the Queen's most Excellent Majesty. 1869.

DEF. 5. page 9

A. D. 1869. July 1. No. 1991.
ROE'S SPECIFICATION.

3 SHEETS
SHEET 1

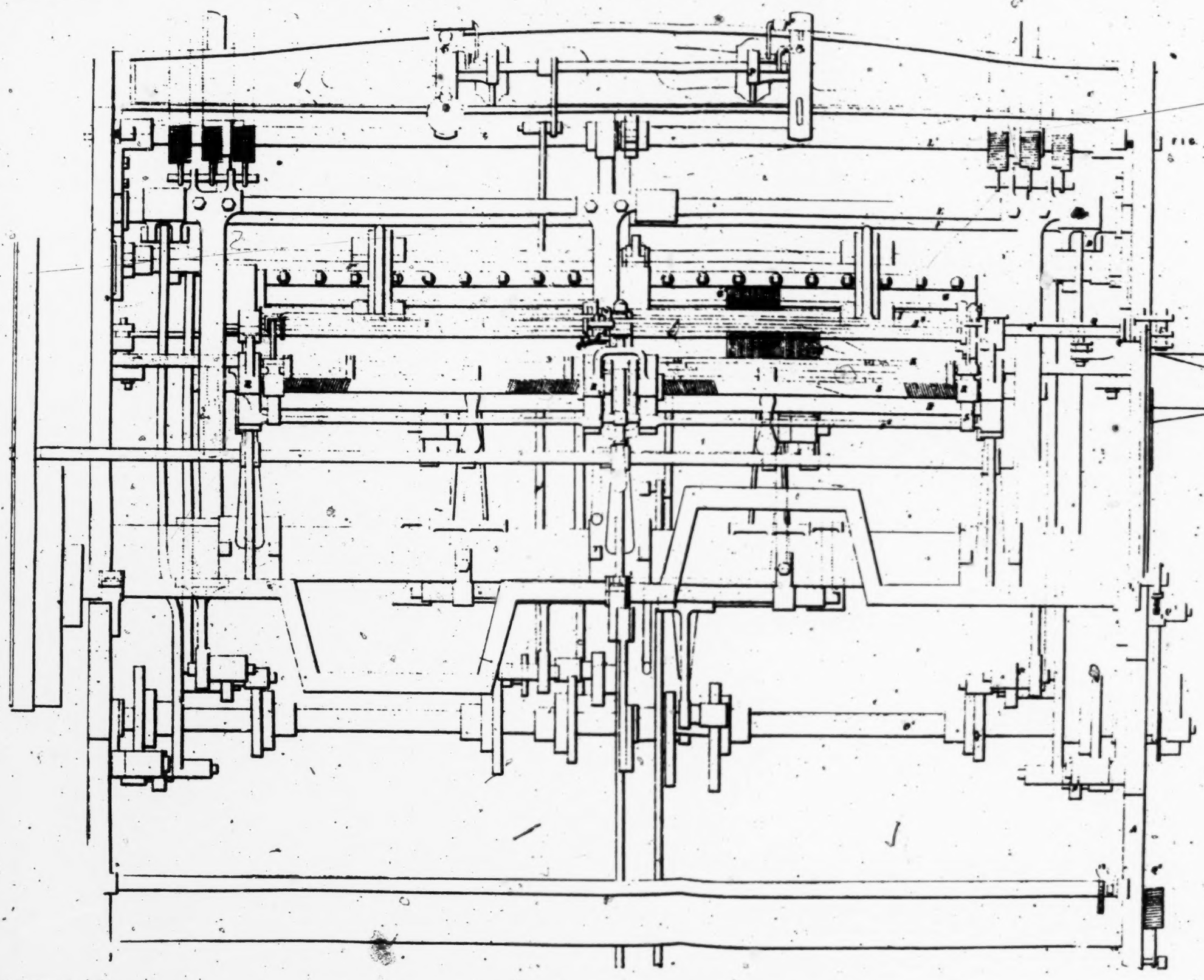

780

DEF. S. page 10

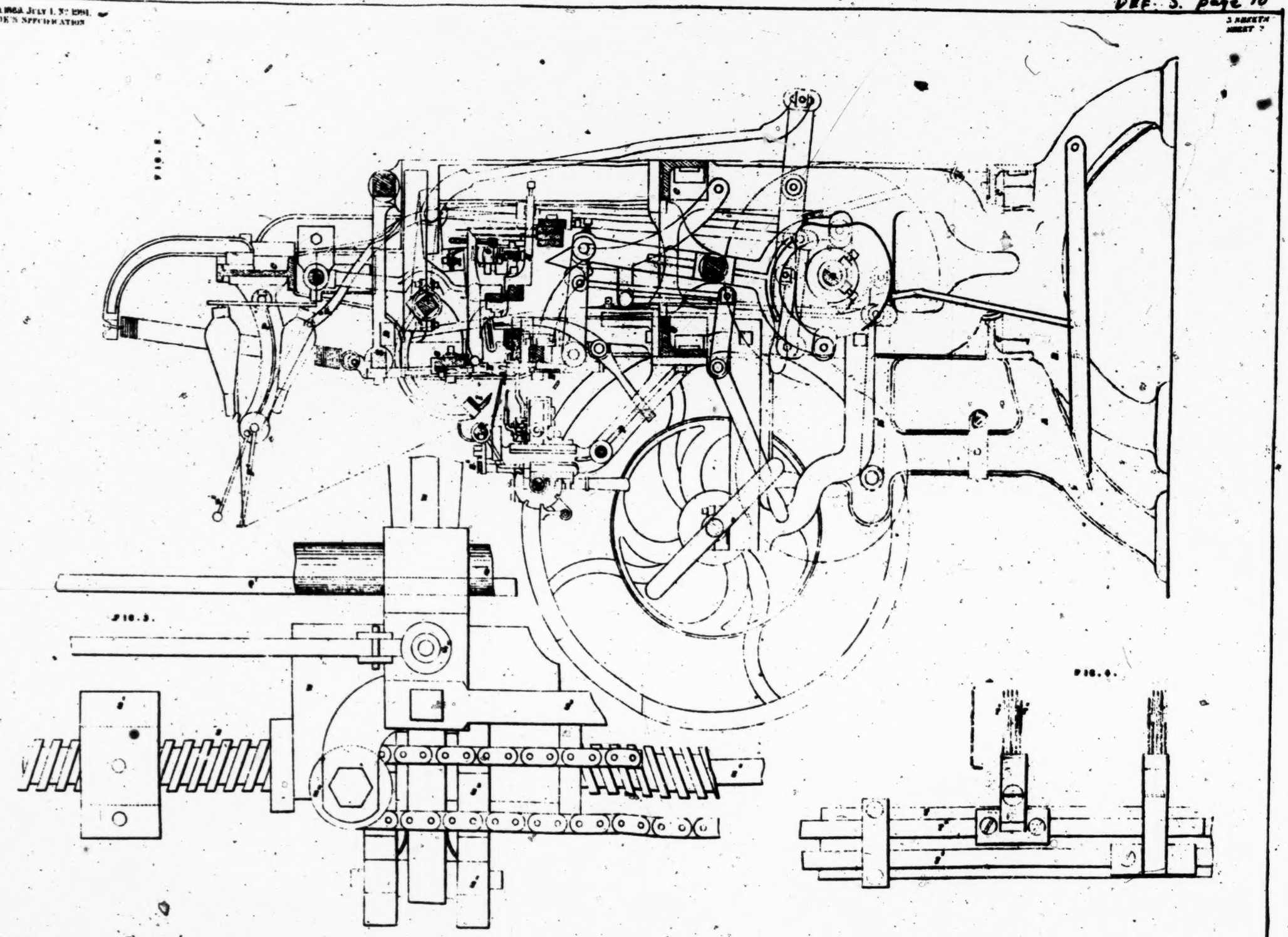

A.D. 1868 JULY 1. N° 1991.
ROPES SPECIFICATION

3 SHEETS
SHEET 3

FIG. 8.

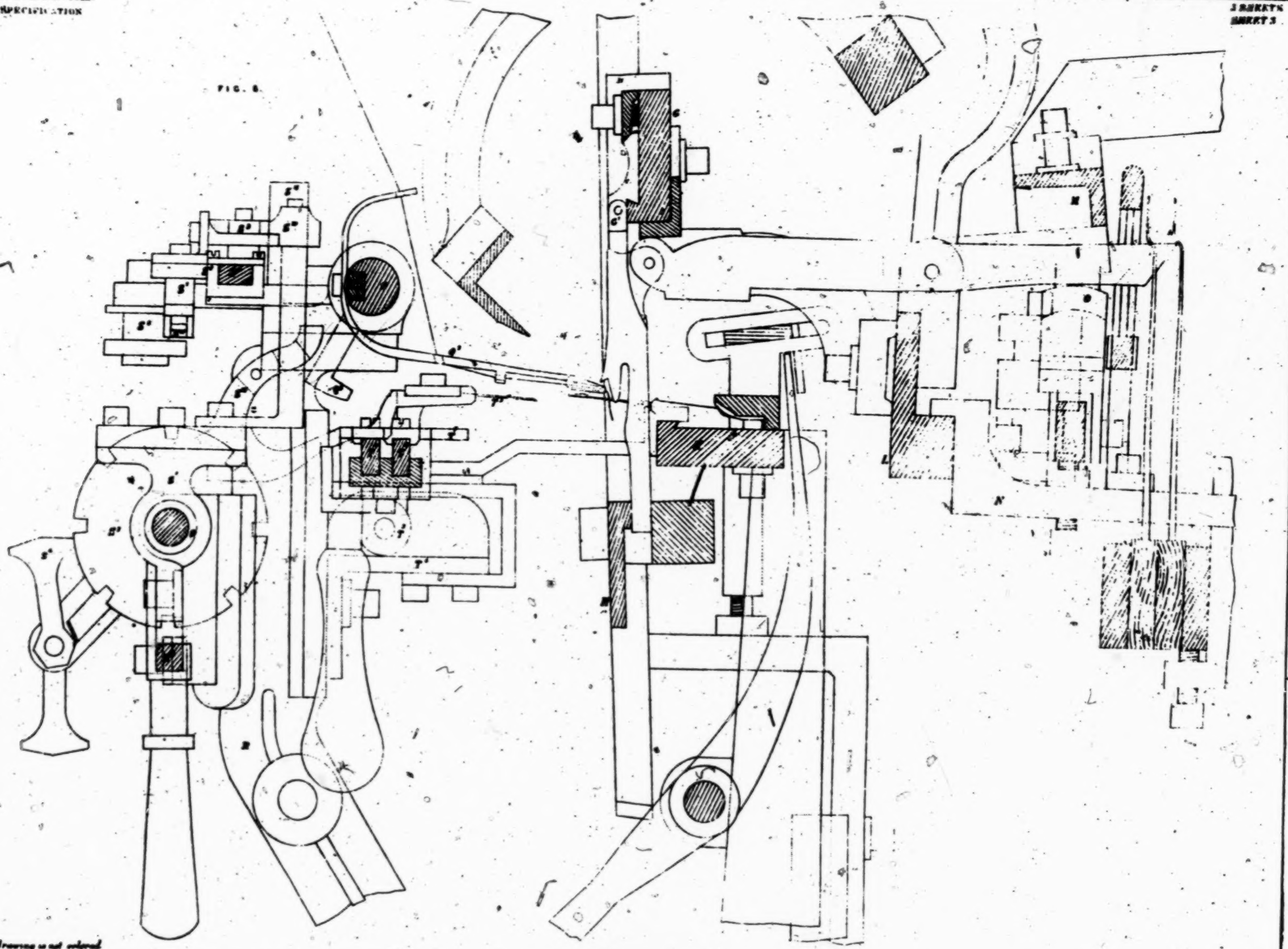

The third drawing is not referred

A.D. 1869. July 1. No. 1991.
ROE'S Specification.

782
DEF. S. page 12

(5 SHEETS)
SHEET 4

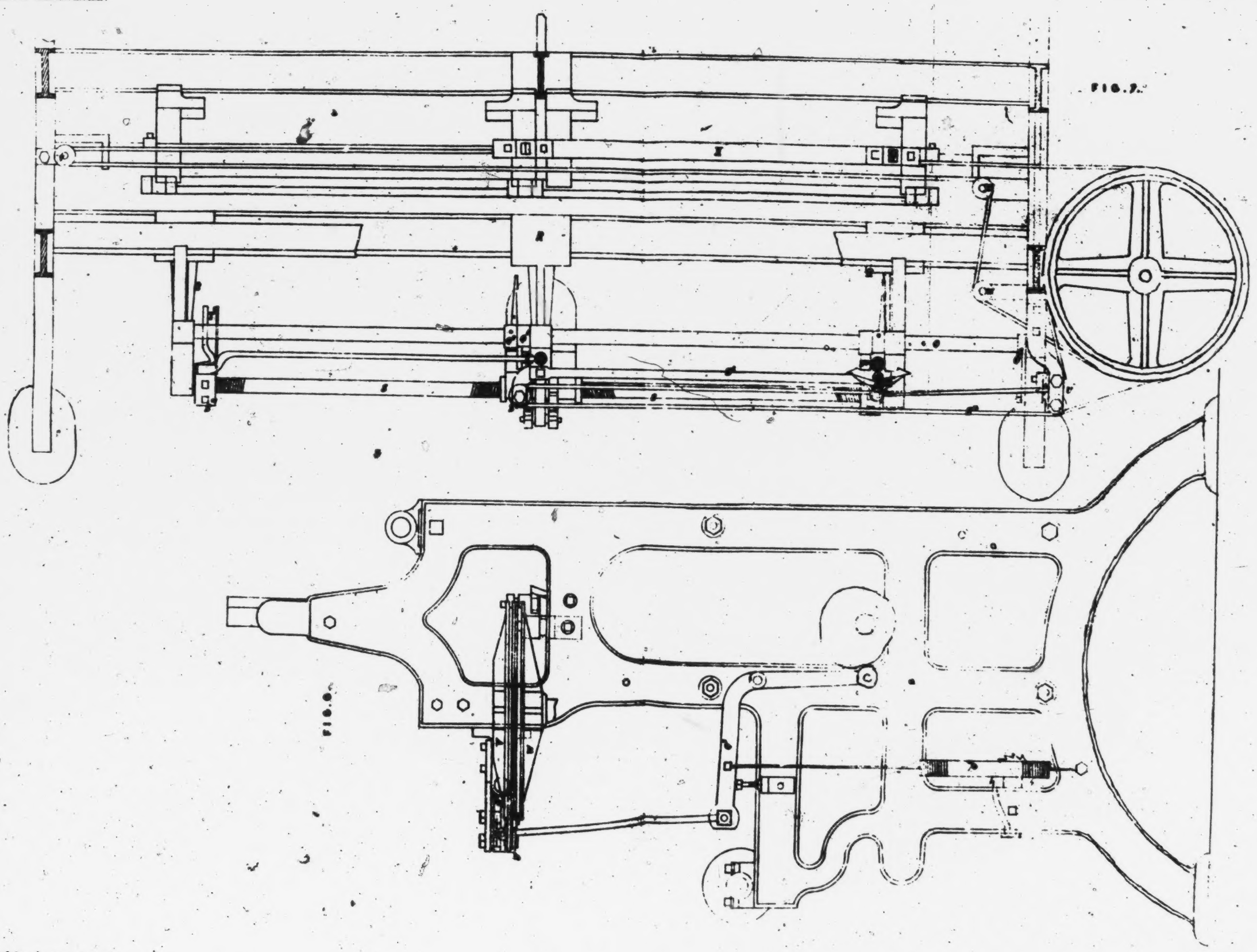

The filled drawing is not colored

DEF. S. page 13

A D 1869 JULY 1 NY 1991.
RDE 5 SPECIFICATIONS.

(3 SHEETS)
SHEET 3.

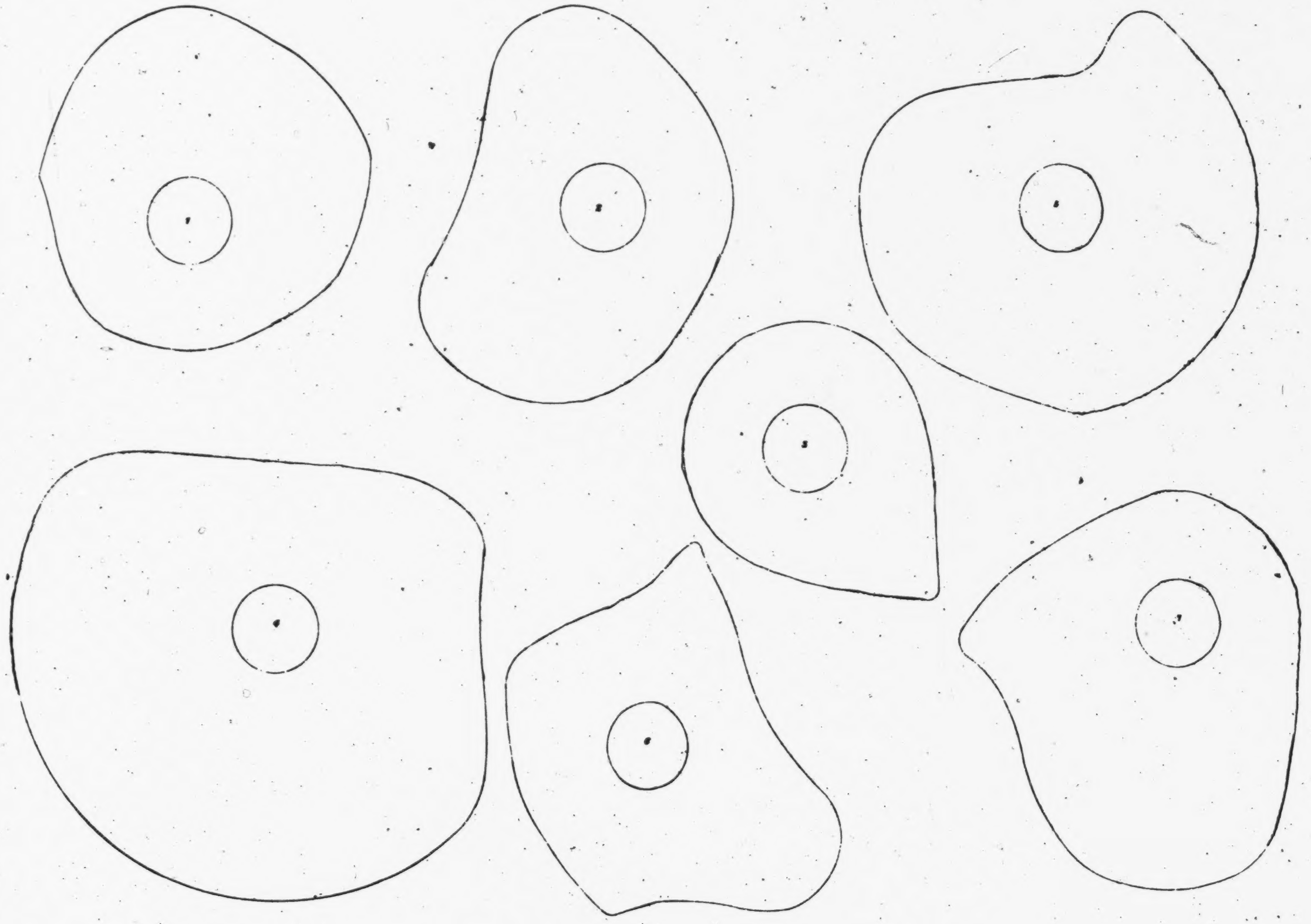

The final drawing is not colored.

DEFENDANT'S EXHIBIT T — 784

Specification. A.D. 1871.—N° 573. 3

Willatt, Gee, & Goss' Impts. in Manufacturing Looped or Knitted Fabrics.

SPECIFICATION in pursuance of the conditions of the Letters Patent, filed by the said Henry Willatt, Robert Gee, and John Goss in the Great Seal Patent Office on the 2nd September 1871.

TO ALL TO WHOM THESE PRESENTS SHALL COME, we, HENRY WILLATT, of New Basford, in the County of Nottingham, Manager, ROBERT GEE, also of New Basford, aforesaid, Working Smith, and JOHN GOSS, of the same Place, Framework Knitter, send greeting.

WHEREAS Her most Excellent Majesty Queen Victoria, by Her Letters Patent, bearing date the Third day of March, in the year of our Lord One thousand eight hundred and seventy-one, in the thirty-fourth year of Her reign, did, for Herself, Her heirs and successors, give and grant unto us, the said Henry Willatt, Robert Gee, and John Goss, Her special licence that we, the said Henry Willatt, Robert Gee, and John Goss, our executors, administrators, and assigns, or such others as we, the said Henry Willatt, Robert Gee, and John Goss, our executors, administrators, and assigns, should at any time agree with, and no others, from time to time and at all times thereafter during the term therein expressed, should and lawfully might make, use, exercise, and vend, within the United Kingdom of Great Britain and Ireland, the Channel Islands, and Isle of Man, an Invention for "IMPROVEMENTS IN MACHINERY OR APPARATUS EMPLOYED IN THE MANUFACTURE OF LOOPED OR KNITTED FABRICS," upon the condition (amongst others) that we, the said Henry Willatt, Robert Gee, and John Goss, our executors or administrators, by an instrument in writing under our or their hands and seals, or under the hand and seal of one of us or them, should particularly describe and ascertain the nature of the said Invention, and in what manner the same was to be performed, and cause the same to be filed in the Great Seal Patent Office within six calendar months next and immediately after the date of the said Letters Patent.

NOW KNOW YE, that we, the said Henry Willatt and Robert Gee, on behalf of ourselves and of the aforesaid John Goss, do hereby declare the nature of the said Invention, and in what manner the same is to be performed, to be particularly described and ascertained in and by the following statement thereof, reference being had to the accompanying

Drawings, and to the letters and figures marked thereon, that is to say:—

In producing a looped or knitted fabric we employ a series of needles known as the latch needle. Each of these needles we solder or otherwise secure in a needle bit, which needle bit has a projection on one of its sides. These needle bits are held by and slide to and fro in a brass or other sley cut to the gauge required. This sley may be placed in a vertical or horisontal position, and it is secured to a fixed bar or bars held at each end and also intermediately, if required, by standards connected together by tie bars or tie rods. The projecting part of the needle bits lies in a groove formed by the edges of two V or otherwise shaped sliding cam plates which are secured to or form part of a sliding piece which has parallel V grooves at its edges, which edges slide upon two longitudinal fixed V-edged bars secured to the brass or other sleys, or to the bar or bars which support the sleys. A thread carrier is attached to the top of the sliding piece or other part of the machine or apparatus which also supports the requisite apparatus for tightening the thread. The sliding piece is moved to the right and left alternately by a cam lever and connecting rod, or by any other means usually employed. In addition to the sley for the needle bits there is a second brass or other sley in front of the first sley. In this sley the needles slide, being projected from the front of the sley to receive the thread from the carrier, the needles being then drawn back within the front sley sufficiently to ensure the work being knocked over the heads of the needles. The outer edge of the front sley is recessed on its under side, and the recess thus formed receives the top edge of a face bar or work bar. Between the top edge of this bar and the sley the work will pass as it is produced.

We propose to arrange the apparatus as above described for producing plain looped or knitted fabrics, and for producing fancy fabrics we employ similar apparatus with the addition of the required thread carriers to supply threads of divers colors. At each selvage of each breadth of fabric we propose to use wheels having points projecting from their circumference to hold the selvages well out, and when we desire to make a ribbed, looped, or knitted fabric we employ a similar apparatus consisting of one or more sleys placed in a vertical position, which sley or sleys slide needle bits and needles, the vertical needles

sliding between the horisontal needles, and being moved by V or otherwise shaped cam plates which have the requisite lead given them by any of the means usually employed, the cam plate being moved to the right or left in any convenient manner.

Having thus set forth the nature of our Invention we proceed more particularly to describe the manner of performing the same with reference to the accompanying Drawings.

Description of the Drawings.

Figure 1 is a sectional view of a machine constructed according to one of our improvements; Figure 2 is a front view of the same machine, and Figure 3 an enlarged sectional view of the main working parts; Figures 4 and 5 represent respectively a plan and edge view of the sliding bar to raise the needles; Figure 6 is a front view of one of the rack plates, and its sliding cover plate employed for narrowing on the left edge of the fabric; Figure 7 is a plan of the same; Figure 8 is a sectional view of one of the moveable parts of the work bar showing the catch which secures the same when required; Figure 9 is a front view of the same showing the moveable left end of the work bar and a portion of the fixed middle part of the bar; Figure 10 shows in plan a double-slotted bar and two sliding cam plates; Figures 11 and 12 show an end view and front view of the apparatus which throws the narrowing cam shaft in and out of gear; Figures 13 and 14 are respectively front view and plan of a thread layer and inclines which depress certain holding back spring bits.

A, A, are end standards connnected together by tie bars B. The upper one is planed true on its top side, and has a needle sley C secured to it (see Figure 3), in which needle bits D slide to and fro, the sley being cut to the gauge required. In each needle bit is soldered or otherwise secured a needle known as the latch needle. The bit has a projection on its top edge which slides in the grooves on the under side of the cam plate C^1, which slides in clips C^4. At each end of the sley C the cam plate has a to-and-fro movement communicated to it by a link C^3 hinged to it at the back of the machine, and also connected with the upper end of a rocking lever C^5 which works on an

axle at its lower end carried by the bottom back tie bar B, the lever C^4 carries a truck which takes into the groove of a driving cam C^7, Figures 1 and 2.

The cam plate is constructed as follows:—The under side of the cam has a straight groove the whole of its length, but it is cut away at the centre to form a space for the two cam plates C^2, C^3, to slide in, each of which cam plates is turned back over the front edge and top of the bar C^1. There is a stud on the top near the back ends of the plates C^2, C^3. These studs take into slots in a bar C^5, which bar is moved to the right and left alternately by its striking against adjustable studs in brackets screwed to the top tie bar B, such movements being in addition to the sliding movements of the bar C^1, upon which it slides. The right and left movements of the bar C^5, cause the plates C^2, C^3, to alternately advance and recede, the advanced plate preventing the needles from receding in advance of the thread layer. A thread carrier E is attached to the top of a sliding bar E^1. The extent to which this bar slides is governed by means herein-after described. The bar E slides in bearings carried by a rocking bar E^2 which rocks in bearings attached to the bar g^1, the rocking motion of which is communicated by a T-ended lever E^3 attached to a second rocking shaft E^4 at the back of the machine; the shaft E^4 is operated by a link hinged to it and to a lever working on a cam E^5. In addition to the sley for the needle bits there is a second sley F in front of the first sley. In this sley the needles slide, being projected from the front of the sley to receive the thread from the carrier and thread layer, the needles being then drawn back within the front sley sufficiently to ensure the work being knocked over the heads of the needles. The outer edge of the front sley is recessed on its under side. The recess thus formed receives the top edge of a work bar G. Between the top edge of this bar and the sley the work will pass as it is produced. Above the needle sley a third sley H is secured, in the back edge of which holding back springs are soldered or otherwise secured. These springs when depressed will hold the work from coming forward during the advance of the needles. The springs are depressed between the needles by inclined bits H^1 (see Figures 3, 13, and 14, which are secured to a bracket attached to and moving with the grooved bar C^1. The sleys F, G, H, are divided into three parts, the outer parts of the bar G are held by brackets which turn upon

an axle G¹, held fast in bearings supported by arms secured to the top tie bar B. The brackets carrying the central portion of the bar G are held by brackets secured fast on the axle G¹. The outer parts of the bar G when a narrowing is being made are brought forward, a lever at each end of the breadth of fabric shown at Figure 9 and by dotted lines at Figure 8, the slots of which levers secures a pin in each outer bracket. Above the front end of the needles is a plate carried by a stud I on the under side of the bracket which carries the inclined bits H¹ (see Figures 13 and 14). This plate is slotted in front. In this slot the lower end of the thread carrier lies, the thread from which passes under the plate which holds it down until the hooked ends of the needles receive it. This plate also prevents the latches of the needles from rising up and covering the hooks, as the latches are freed from the loops of the fabric as the needles come forward, the needles being raised by inclines carried by the sliding bar H² (see Figures 3, 4 and 5). The above described parts arranged and combined as above described constitute a machine for making a plain, looped, or knitted fabric.

For narrowing or widening such fabric we employ apparatus constructed as follows:—A bar K supported by two arms secured to the top tie B supports three bearings for the axles of two screws L the outer ends of these axles carry each a rocking lever, the upper ends of which carry a double ended pawl L¹, which drives a toothed wheel. The lower end of the rocking lever is hinged to a link attached to the upper end of a lever which carries a stud O¹, operated by a grooved cam P. There are two boxes M each of which slides on the bar K, and is caused so to slide by the partial revolution of the toothed wheel moved in either direction of motion by drivers L¹. Studs screwed to the box M take into the grooves of the screws L. Each box carries a slide N which has an axle on which a double ended lever N¹ moves, the outer end of which is kept down by a spring shown by dotted lines, the inner end of the lever carrying the ticklers or points. The slide N is attached to the upper end of a rocking lever having its lower end connected by a link with the upper end of a lever provided with a stud O¹ which is operated by the cam P on the cam shaft P¹, the rocking lever being free to move on the shaft O carried by bearings secured to the arm attached to the upper tie bar B, the cam P communicating backward and forward

movements to the points or ticklers. These ticklers besides having the movements just described have also an upward and downward movement imparted to them by the upper end of a lever O^2, which carries a stud at its lower end actuated by an inclined bit O^3, shown by dotted lines on Figure 3, M^1 is a driving arm screwed to the top of each box M. The inner end of this driver falls into a slot in a stud carried by a sliding plate R^2, which covers a fixed slotted plate R^1 screwed to a bar R supported by brackets attached to the top tie bar B. By these means the thread carrier E when depressed is stopped from passing the needle which was previously narrowed by a stud which projects from the back of the thread carrier E dropping into one of the slots of the plate R^1.

Having described the separate movements of the several parts we will now proceed to describe the movements of the machine collectively, commencing with a course drawn from left to right. The thread carrier and thread layer having laid the thread within the hooks of the needles, the needles recede within the sley F which knock over the loops at the needle heads, the needles then advance to receive the thread for the next course, such movements being successively repeated a plain, looped, or knitted fabric will be made, to narrow which the cam shaft I^1 must be thrown into gear by letting the bolt I^2 fall into the catch of one of the plates, between which it slides and which are attached to the bevel wheel before mentioned, at one end, which is effected by withdrawing a wedge from below the bolt I^2 shown at Figure 12. The narrowing cam shaft being in gear, a section of the sleys F and H and work bar G, advance and put the loops on the ticklers, they then recede, the ticklers rise and traverse two or more needles. The sleys again advance, the springs in the sley H are then depressing and take the work back.

Having now described the nature of the said Invention, and in what manner the same is to be performed, we declare that we claim,—

First. The machinery or apparatus for narrowing or widening alternately looped or knitted fabrics, for producing such fabrics without stopping the working of the machine.

Second. The arrangement, combination, and construction of parts herein-before described, constituting our improved machinery or apparatus

for the manufacture of looped or knitted fabrics, substantially as set forth.

In witness whereof, we, the said Henry Willatt and Robert Gee, for ourselves and on behalf of the said John Goss, have hereunto set our hands and seals, this Thirty-first day of August, in the year of our Lord One thousand eight hundred and seventy-one.

HENRY WILLATT. (L.S.)
ROBERT GEE. (L.S.)

Witness,
GEO. JON. ROBINSON,
Patent Office,
Nottingham.

LONDON:
Printed by GEORGE EDWARD EYRE and WILLIAM SPOTTISWOODE,
Printers to the Queen's most Excellent Majesty. 1871.

A.D. 1871 MAR. 3. No. 573.
WILLATT, GEE & GOSE' SPECIFICATION.

13 SHEETS.
SHEET 1

FIG. 1.

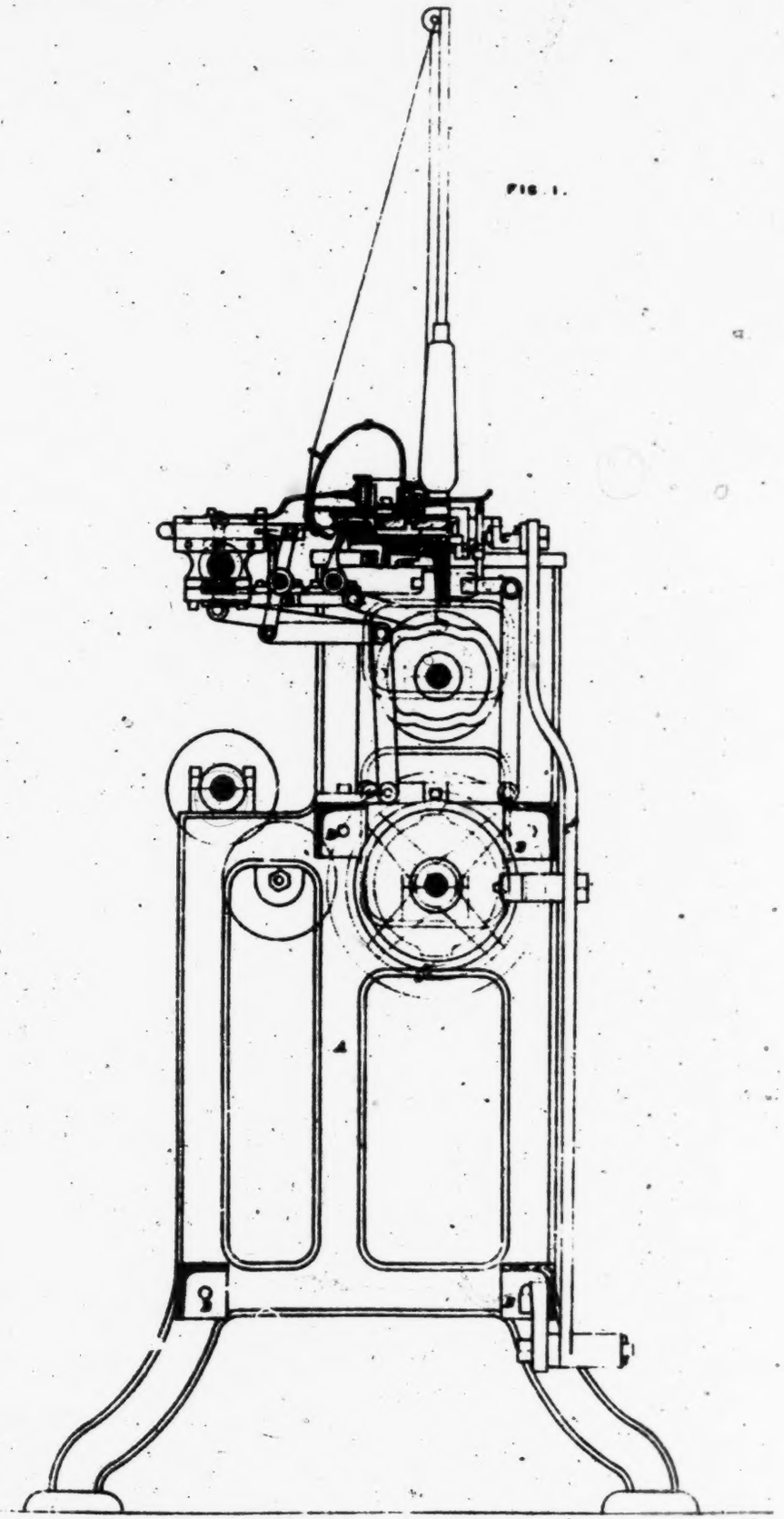

FIG. 2.

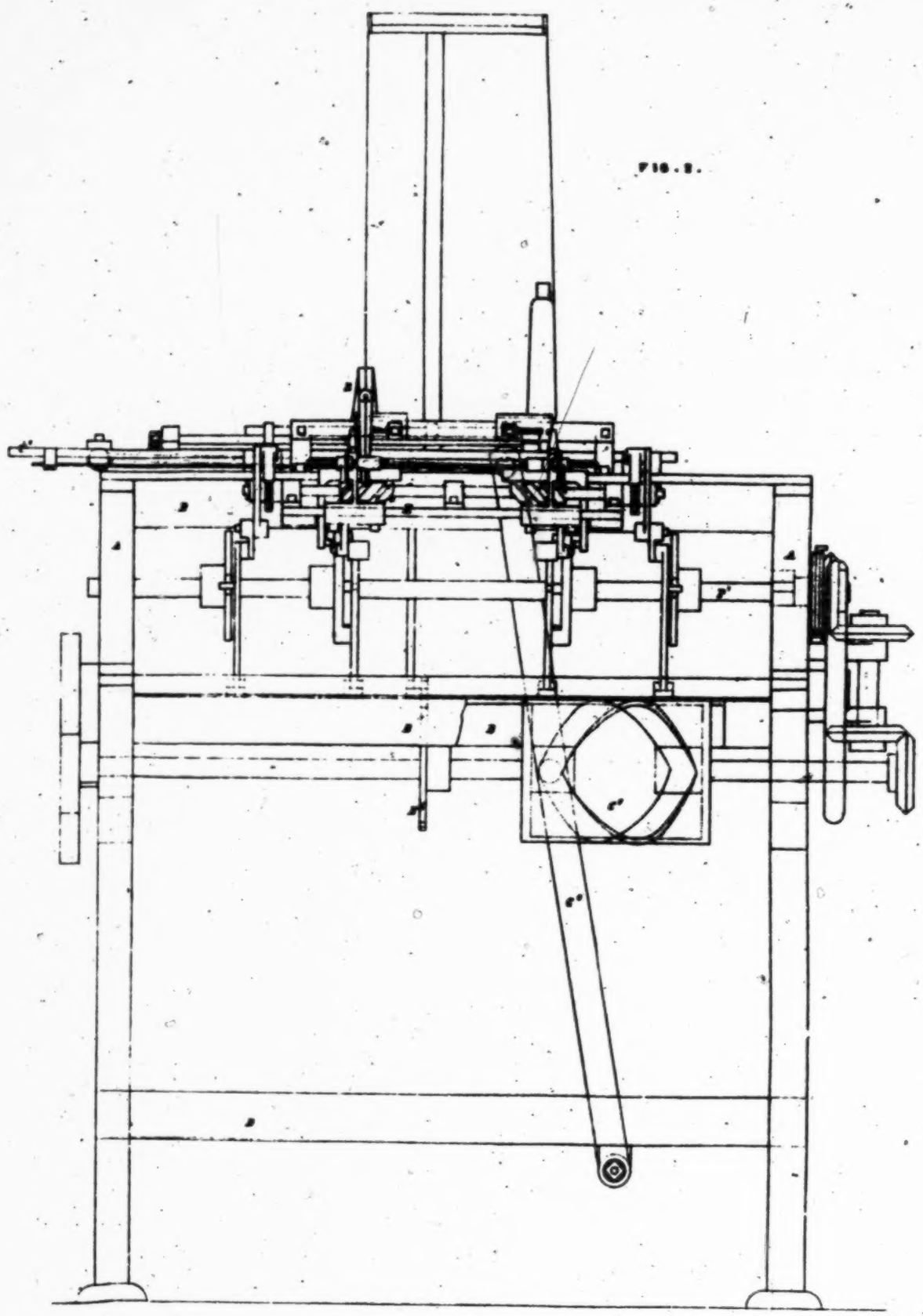

The filled drawing is not coloured.

Drawn on Stone by Malby & Sons

792
DEF. T. p. 9

A.D. 1871. MAR. 3. Nº 573.
WILLATT, GEE & GOSS' SPECIFICATION.

(3 SHEETS)
SHEET 2

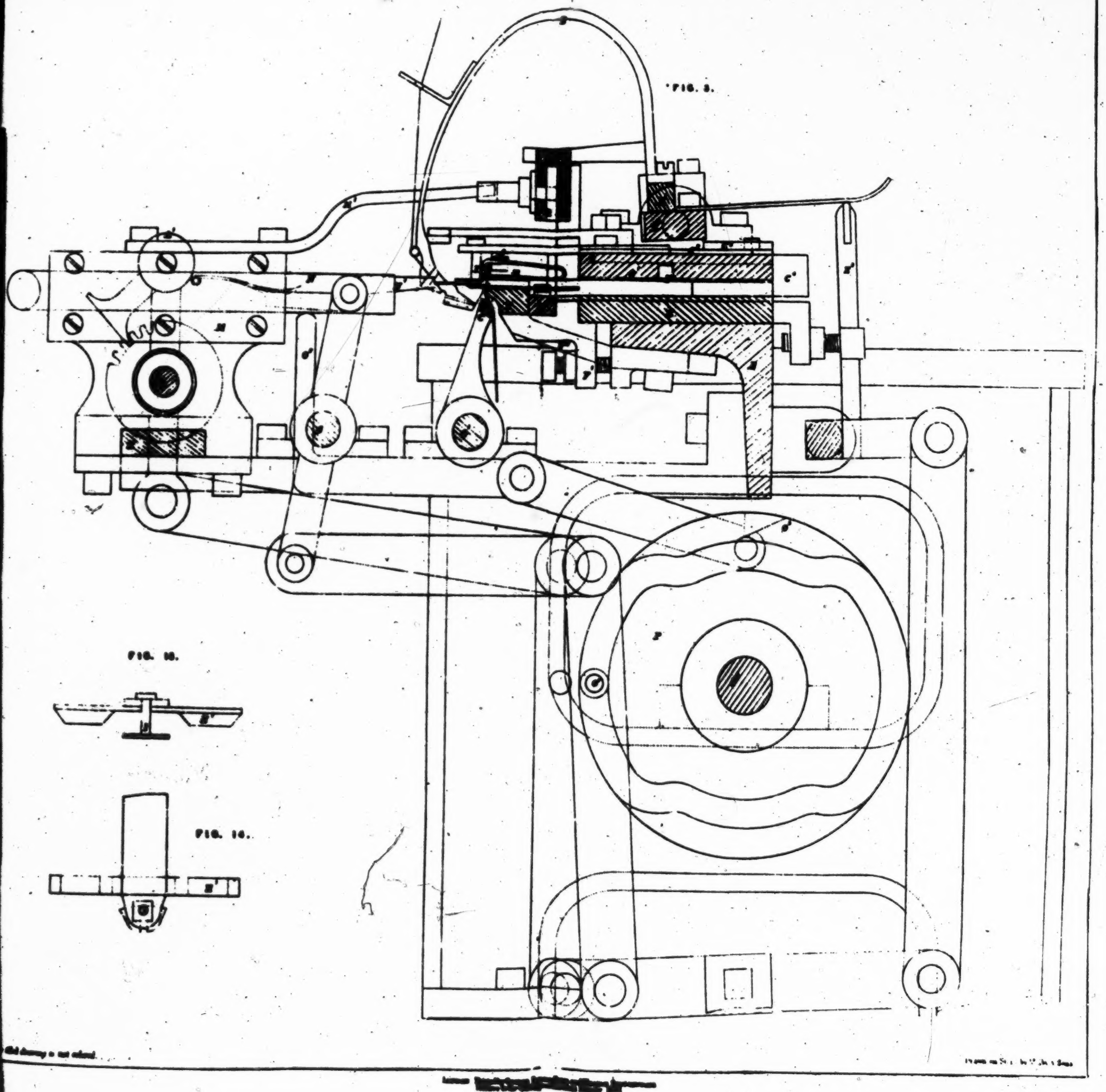

DEF. T. p. 10

A.D. 1871. Mar. 8 No. 573.
WILLATT, GEE & GOSS' SPECIFICATION.

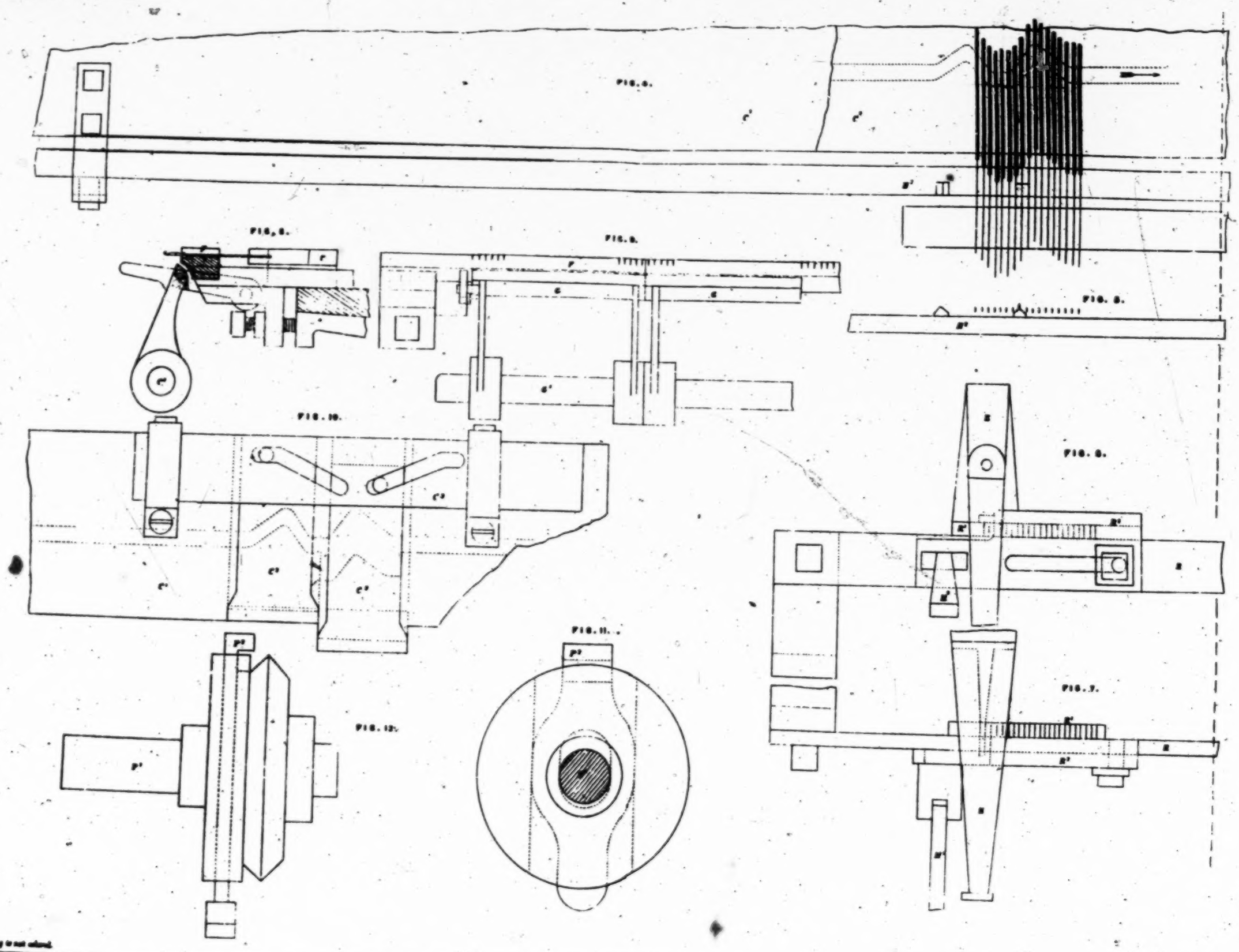

The total drawing is not colored.

DEFENDANT'S EXHIBIT U

794

KAISERLICHES PATENTAMT.

AUSGEGEBEN DEN 8. MAI 1883.

PATENTSCHRIFT

№ 21332

KLASSE 25: Flecht- und Strickmaschinen.

LAUE & TIMAEUS, DRESDNER STRICKMASCHINENFABRIK IN LÖBTAU BEI DRESDEN.

Neuerungen an der Lamb'schen Strickmaschine.

Zusatz-Patent zu No. 18242 vom 29. Juni 1880.

Patentirt im Deutschen Reiche vom 2. December 1881 ab.

Längste Dauer: 28. Juni 1895.

In dem Haupt-Patent ist die Fadenführung und deren Umstellung für hinterlegte Waare dargestellt und beschrieben. Die Einrichtung hat den Zweck, mit den beiden Fäden dergestalt wechseln zu können, dafs der eine oder der andere den hinterlegten Faden bildete. Eine gleiche Umstellung durch einen Hebel zum Wechseln der Faden kann auch bei der Anwendung von mehr als einem Fadenführerpaar benutzt werden, unter Zuhülfenahme der nachstehend beschriebenen Einrichtungen, wodurch das Farbenmuster in hinterlegter Waare in vielfacher Weise variirt werden kann.

Angenommen, die beiden Fadenführer 4 und 5, Fig. 1, seien in Arbeit, so kann deren Stellung zu einander durch den Umstellhebel *a* dergestalt verändert werden, dafs der eine oder der andere Fadenführer der nachfolgende ist und den hinterlegten Faden zuführt. Hierbei stehen dann die übrigen Fadenführer 1, 2, 3 und 6 seitlich von der Nadelbahn aufser Arbeitsstellung.

Es kann nun nicht allein jedes beliebige Paar unter den sechs Fadenführern zum Zusammenarbeiten eingestellt werden, sondern es können auch die beiden Fadenführer eines beliebig gewählten Paares in der oben angegebenen Weise unter einander verstellt werden. Hieraus geht schon hervor, in welcher Mannigfaltigkeit der Wechsel im Farbenmuster bei hinterlegter Waare stattfinden kann.

Die sechs genannten Fadenführer gleiten in den sechs Nuthen 7, 8, 9, 10, 11 und 12, die Fadenführer sitzen an den sechs Zugstangen 13, 14, 15, 16, 17 und 18, deren linksseitiges Ende in den Führungsstücken 19, 20, 21, 22, 23 und 24 befestigt ist.

Diese Führungsstücke arbeiten in den genannten Nuthen zwischen den stufenartig ausgeschnittenen Stücken *b b*, welche durch die Stellschrauben *c c* auf beliebige Entfernung, die sich nach der Breite des Arbeitsstückes zu richten hat, von einander eingestellt werden können. Die Einstellung des betreffenden Fadenführerpaares und die Umstellung innerhalb dieses Paares geschieht durch folgende Einrichtungen:

An einem Ende des Schlittens ist der aufrechte Ständer *d* befestigt, der den Fadenführertreiber bildet und den Umstellmechanismus trägt. Derselbe ist in Fig. 1 in Vorderansicht, Fig. 2 in Endansicht und Fig. 3 im Grundrifs zu sehen. Fig. 4 und 5 geben Vorderansichten, Fig. 6 eine Seitenansicht desselben in vergröfsertem Mafsstabe wieder.

In dem Ständer oder Fadenführertreiber *d* sind zur Führung der beiden Schienen *f g* in ihren Langlöchern vier Führungsstifte *e* eingeschraubt. Die Schienen können auch durch den Umschalthebel *a* in verticaler Richtung zu einander verstellt werden. Zwischen Ständer *d* und Führungsschienen *f g* sind zwei Gleitstücke *h h* angebracht. Diese Gleitstücke sind mit nach hinten vorstehenden Mitnehmern *m m* versehen, die, zwischen den Nasen eines der Führungsstücke 19 bis 24 arbeitend, den zu diesem Führungsstück gehörigen Fadenführer hin- und herschieben.

795

21392

Die Gleitstücke *h k* sind mit zwei Löchern versehen; ebenso sind die Schienen *f g* mit Löchern versehen, die so zu einander stehen, dafs durch Einstecken der Knöpfe *l i* mit ihren beiden Stiften *o r* in zwei zusammengehörende Löcher der Schienen *f g* und in die Löcher der Gleitstücke *h k* die Schienen *f g* und Gleitstücke *h k* mit einander verbunden werden, so zwar, dafs durch Umstellung der Schienen in verticaler Richtung mittelst Hebels *a* die Gleitstücke *h k* einander genähert oder von einander entfernt werden können.

Diese beiden verschiedenen Stellungen sind in den Fig. 4 und 5 dargestellt. Der Zweck dieser Verstellung ist bereits im Haupt-Patent angegeben. Durch diese Verstellung wird der Mitnehmer *m* z. B. aus der Stellung zwischen den Nasen *p p* in die Stellung zwischen die Nasen *q q*, Fig. 7, gebracht, und ebenso wechselt der Mitnehmer *n* seine Stellung zwischen den Nasen des Führungsstückes desjenigen Fadenführers, der gleichzeitig sich in Function befindet. Die Folge dieser Veränderung ist der Wechsel in der Reihenfolge der beiden arbeitenden Fadenführer über die Arbeitsbahn, also der gewünschte Wechsel, dafs der bisher den hinterlegten Faden bildende Faden nunmehr im Arbeitsstück oben auf zu liegen kommt und der bisherige obere Faden hinterlegt wird, oder was dasselbe sagt, als zweiter Faden die Nadelbahn passirt.

Will man einen der bisher in Function gewesenen Fadenführer ausschalten und dafür einen anderen Fadenführer in Function treten lassen, oder will man beide Fadenführer ausschalten und dafür zwei beliebig andere Fadenführer einstellen, so geschieht dies einfach durch Umstellen des einen Knopfes oder der beiden Knöpfe *l i* aus dem einen Paar Schienenlöcher in ein anderes Paar; dadurch wird das Gleitstück und sein Mitnehmer des betreffenden Knopfes in die Bahn zwischen die Nasen des oder der nunmehr in Function tretenden Fadenführer eingestellt.

Wie aus Fig. 7 und aus den Querschnitten, Fig. 8 und 9, ersichtlich, sind die Nasen *p q* je auf der Fläche eines an dem Führungsstück (19 bis 24) gelagerten Balanciers *x* angebracht; gleichzeitig ist dieses Führungsstück mit einer Schiene *s* überdeckt, die sich in ihren Langlöchern auf den Stiften *t* des Führungsstückes verschieben kann. Diese Verschiebung erfolgt jedesmal, wenn die Schiene *s* am Ende einer halben Tour an den eingestellten Theilen *b b* antrifft, und hat diese Verschiebung der Schiene *s* den Zweck, eines ihrer Löcher *u* über einen der Ausschnitte *v* in den Führungsstücken einzustellen, damit der Balancier *x* sich um so viel drehen kann, dafs einer seiner Vorsprünge *w* an seiner hinteren Seite durch ein Loch *u* der Schiene in einen Ausschnitt *v* des Führungsstückes eintreten kann, wodurch erreicht wird, dafs der von der Schlittenbewegung beeinflufste Mitnehmer *m* oder *n* den etwas gröfseren Schlittenlauf mitmachen kann, während der Lauf des Fadenführers auf sein geringes Mafs beschränkt bleibt.

Fig. 10, 11 und 12 sind Seiten- und Oberansicht und Querschnitt der Verbindung zwischen Zugstange und Fadenführer.

In dem Haupt-Patent sind die Einrichtungen dargestellt und beschrieben, um die Oesenbetten oder Abschlagkämme entweder gleichzeitig oder hinter einander durch einen Mechanismus zu verstellen bezw. zu senken. Um dieses Senken hinter einander bewirken zu können, so zwar, dafs der eine Abschlagkamm unabhängig von dem anderen gesenkt oder gehoben werden kann, kommt für den einen Abschlagkamm der Winkelhebel *a*, Fig. 13 und 14, für den anderen Abschlagkamm der Hebel *b*, Fig. 13 und 15, zur Anwendung.

Winkelhebel *a* dreht sich um *c*, sein Langloch umfafst den Stift *d* auf Schiene *e*, die an ihren Enden so geführt ist, dafs sie sich lediglich in horizontaler Richtung verschieben läfst; da die Stifte *f* des Abschlagkammes in die schräg gestellten Langlöcher der Schiene *e* eingreifen, so mufs bei der horizontalen Verschiebung der letzteren der Abschlagkamm eine verticale Verschiebung mitmachen, wobei er mit seinen Langlöchern *g* über den Stiften *h* gleitet.

Dieselbe Einrichtung ist für den gegenüberliegenden Abschlagkamm getroffen, nur mit dem Unterschiede, dafs hier der Hebel *b* mit seinem Handgriffe nach unten vorsteht.

Patent-Ansprüche:

Die beschriebenen Neuerungen an den durch P. R. No. 18242 geschützten Einrichtungen:

1. Zur Herstellung hinterlegter Waare die dargestellte Anordnung und Führung einer vielfachen Zahl von Fadenführern gegenüber der in dem Patente No. 18242 zur Herstellung hinterlegter Waare angegebenen, aus zwei Fadenführern bestehenden Gruppe.
2. Der in der verlängerten Achse der Strickmaschine angeordnete Mechanismus zum Antrieb der in Arbeit befindlichen Fadenführergruppe und zur Wechselstellung dieser Gruppe unter sich, sowie zur beliebigen Auswechselung dieser Gruppe oder eines Fadenführers dieser Gruppe mit den aufserhalb der Nadelbahn in Ruhestellung befindlichen Fadenführern.
3. Die in den Fig. 13, 14 und 15 dargestellte Einrichtung zum getrennten Herablassen der Abschlagkämme durch Hebel *a b*.

Hierzu 3 Blatt Zeichnungen.

4/2

BERLIN. GEDRUCKT IN DER REICHSDRUCKEREI

[fol. 796] DEFENDANT'S EXHIBIT U

Translation

German Patent No. 21,332

Laue & Timaeus, Dresdner Strickmaschinenfabrik in Loebtau b/Dresden

Improvements on the Lamb Knitting Machine

Suppl. Patent to No. 18,242 of June 29, 1880. Patented in Germany: December 2, 1881. Valid, until June 28, 1895

In the main patent the thread guiding and its transposition for reinforced fabric is shown and described. The object of the device is to change with both threads in such a manner that either the one or the other forms the reinforcing thread. A like transposition by means of a lever to change threads may also be used when employing more than one pair of thread carriers with the help of the following described devices, whereby it is possible to produce a large variety of color designs in reinforced fabrics.

Assuming that both thread carriers 4 and 5, Fig. 1, are operating, their position to each other may be changed by means of the transposing lever a, in such a manner that either the one or the other thread carrier follows after and feeds the reinforcing thread. In this case the remaining thread carriers 1, 2, 3 and 6 stand inactive outside of the needle bar.

Not only may any selected pair of the six thread carriers be adjusted to work together, but both thread carriers of any selected pair can also change their position to each [fol. 797] other in the above described manner. This already shows, what a great variety of changes in the color designs in reinforced fabric may be obtained.

The six mentioned thread carriers, slide in the six grooves 7, 8, 9, 10, 11 and 12, and are fastened on the six draw-bars 13, 14, 15, 16, 17 and 18, whose left hand ends are fastened to the guide pieces 19, 20, 21, 22, 23, and 24.

These guide pieces operate in the aforementioned grooves between the stepped stops b,b, which by means of adjusting screws cc may be positioned at various distances from one another, depending on the width of the fabric to be made. The positioning of the thread carrier pair in

question and the transposition within this pair is done by the following devices:

On one end of the slide bar the upright post d is fastened, which acts as the thread carrier driver and carries the transposing mechanism. Same is to be seen in Fig. 1, front view, Fig. 2, end view, Fig. 3 plan view. Fig 4 and 5 give front views, Fig. 6 a side view of same in an enlarged scale.

Into the upright post or thread carrier driver d are screwed four guide pins e, engaging elongated holes of both rods f and g, thereby guiding motion of same. The vertical position of these rods may also be changed in relation to one another by means of the transposing lever a. Between post d and guide rods f,g two slide blocks h,k, are provided. Projecting from the rear and fastened to these slide blocks are driving pins m,n which, working between the noses of one of the guide pieces 19 to 24, move forth and back the thread carrier belonging to this guide piece. The slide blocks h k are provided with two holes, the guide rods [fol. 798] f g are likewise provided with holes, in such relation to one another that when the knobs l i engage with their two pins o r in two complementary holes of rods f g and slides h k, the guides f g and slides h k are tied together, in such a manner that by a change of the vertical position of the guide rods f g by means of lever a, the slides h k may be brought nearer or farther from each other.

These two different positions are shown in Figs. 4 and 5. The reason for this transposition has already been stated in the main patent. Thru this transposition the driving pin m, for instance, is brought out of position between the noses p p into position between the noses q q, Fig. 7. Also driving pin n changes its position between the noses of the guide pieces of the other thread carrier, which functions at the same time. The consequence of this shifting is the change in the sequence of operation of both thread carriers over the needle bed, i.e. the desired change that the thread, heretofore used as the plaiting or reinforcing thread, now comes to lay on top in the fabric, and the heretofore top thread now plaites or reinforces, or in other words, passes across the needle bed as the second thread.

If it is desired to disengage a thread carrier, heretofore operating, and engage another one in its place, or to dis-

engage both thread carriers and engage any two other ones in their places, it is simply done by transposing the one knob or both knobs l i from one pair of rod holes to another pair; thereby causing the slide piece and its driving dog to be shifted into the path between the noses of the new carrier rod which is now to function.

[fol. 799] As shown in Fig. 7 and cross sections 8 and 9, noses p and q are both fastened to balancing members x, which in turn is pivoted to guide piece (19 to 24); the guide piece is also covered with rod s which is movable in its elongated holes on the t, fastened to the guide piece. Such longitudinal movement occurs each time when the rod s at the end of each stroke (half cycle of carrier rod) strikes the stops b b. The purpose of this movement of rod s is to register one of its holes u over one of the cutouts v in the guide piece, so that the balancing piece x can turn an amount sufficient for one of its projections w to enter thru hole u in rod s into the cutout v of the guide piece. This permits the driving pins m or n fastened to the carrier driver d to travel the full length of the driver, while the travel of the thread carriers is shorter (and varying, limited by the stepped stops b b).

Figs. 10, 11, and 12 are side and top views and cross section, showing connections between draw bar and carrier.

In the main patent are shown and described the devices to lower the loop beds or knocking over bit beds either together or alternately by means of a mechanism. For this alternate lowering, so that the one knocking over bit bed may be raised or lowered independently of the other, angle lever a, Fig. 13, and 14, is provided for the one bed, and lever b, Fig. 13 and 15, for the other.

Angle lever a turns about c, its elongated holes engaging pin f on rod e, which is guided at its end so that it may be moved horizontally only. As the pins f of the knocking over bit bed engage the diagonally elongated holes of rod e, [fol. 800] when rod e is moved horizontally, the knocking over bit bed must make a vertical movement, being guided by pins h engaging elongated holes g of the knocking over bit bed.

The same device is provided for the opposite knocking over bit bed, only with the exception that here the lever b has a downwardly protruding handle.

Claims

The described improvements on the P. R. #18,242 protected devices:

1) For the manufacturing of reinforced fabric the described arrangement and guiding of a multiplicity of carriers as against a group of only two thread carriers as set forth in Patent 18,242 for manufacturing reinforced fabrics.

2) The mechanism applied in the direction of the long axis of the knitting machine for the operation of the thread carriers and for the changing of carriers within this group, as well as for any desired exchange between this group or one carrier of this group and the thread carriers standing inactive outside of the needle bed.

3) The device shown in Figs. 13, 14 and 15 for the separate lowering of the knocking over bit beds by means of levers a and b/.

801

DEF. U. p. 3.

LAUE & TIMAEUS, DRESDNER STRICKMASCHINENFABRIK
IN LÖBTAU BEI DRESDEN.

Neuerungen an der Lamb'schen Strickmaschine.

Blatt I.

Fig 1.

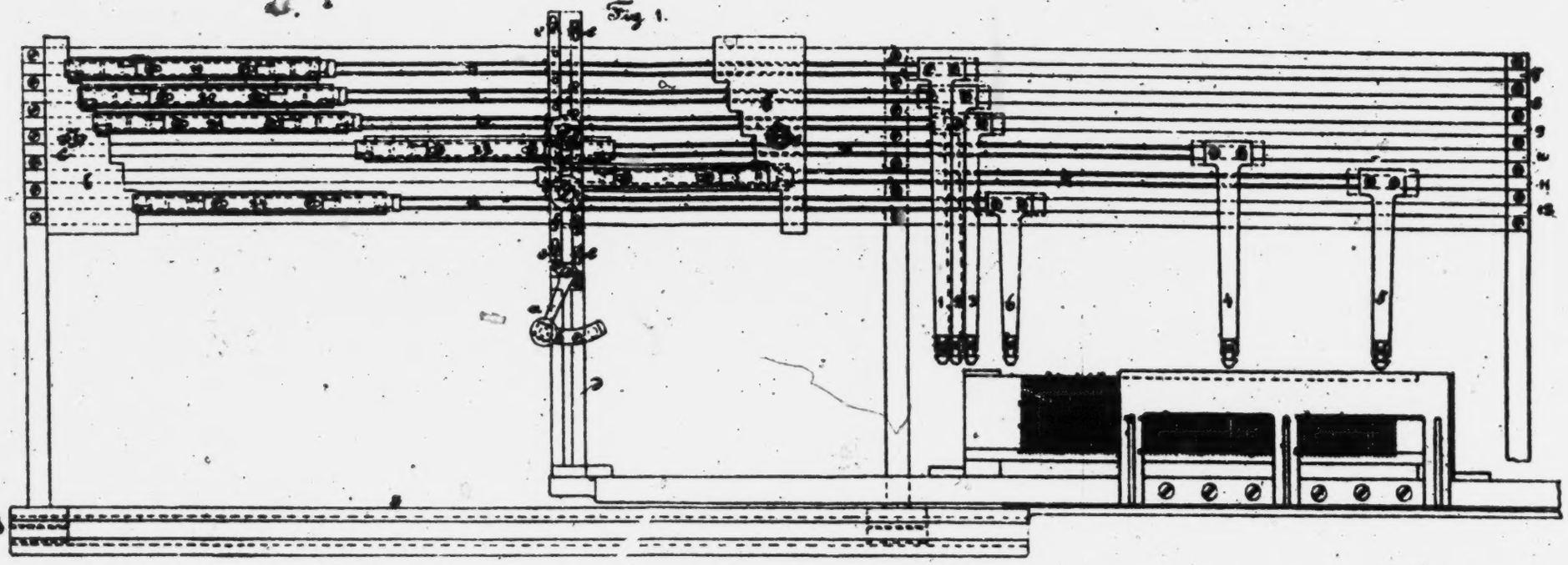

Fig 2.

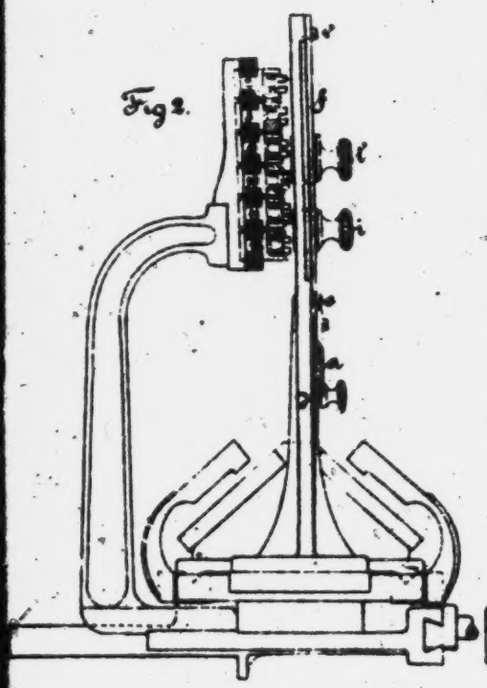

Fig 3.

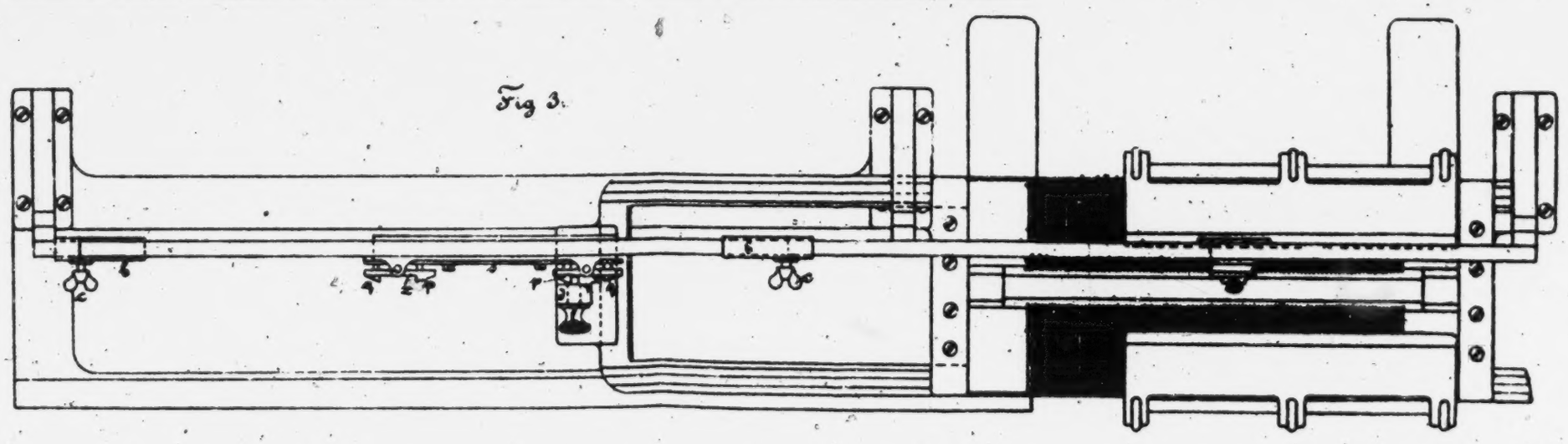

Zu der Patentschrift

№ 21332.

PHOTOGR. DRUCK DER REICHSDRUCKEREI.

LAUE & TIMAEUS, DRESDNER STRICKMASCHINENFABRIK
IN LÖBTAU BEI DRESDEN.

Neuerungen an der Lamb'schen Strickmaschine.

802
DEF. U. p. 4.

Blatt II.

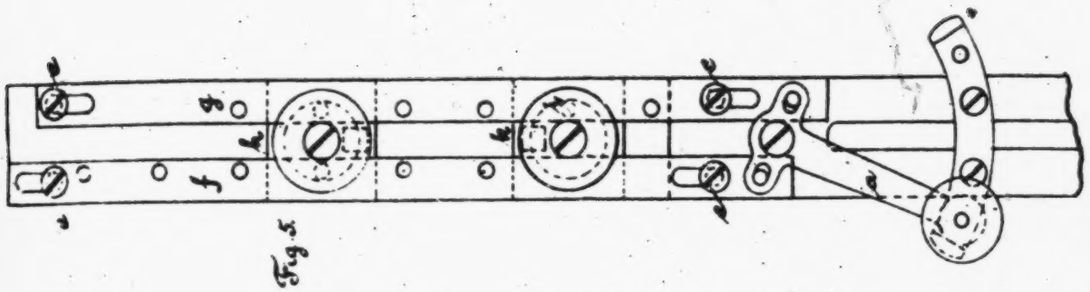
Fig. 5.

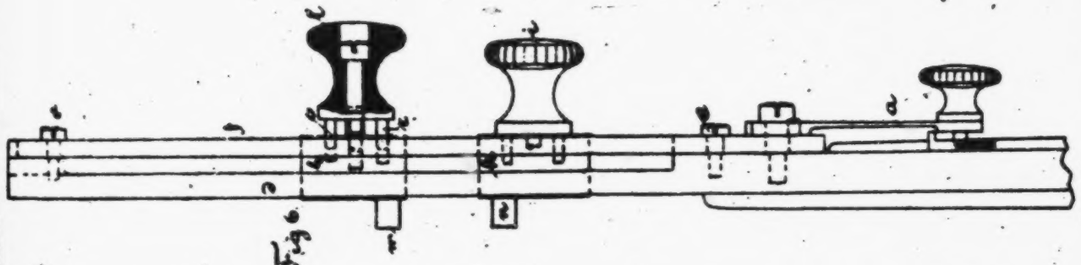
Fig. 6.

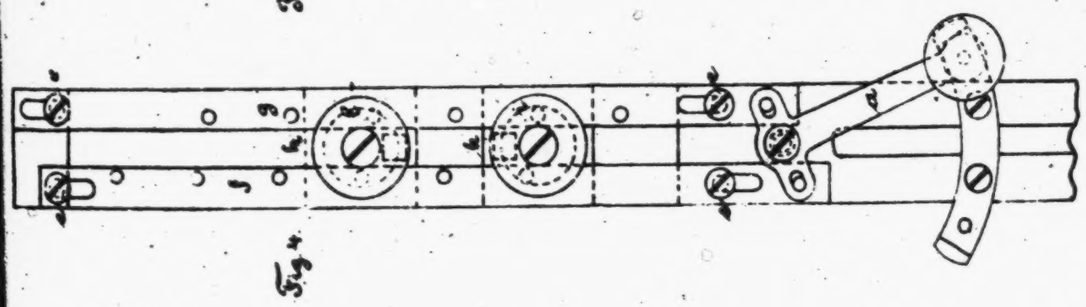
Fig. 7.

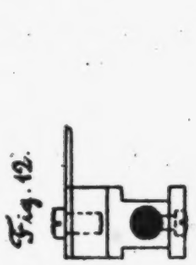
Fig. 12.

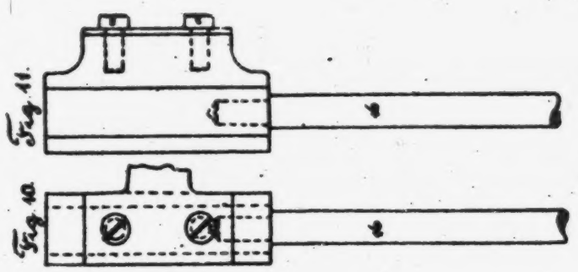
Fig. 11.

Fig. 10.

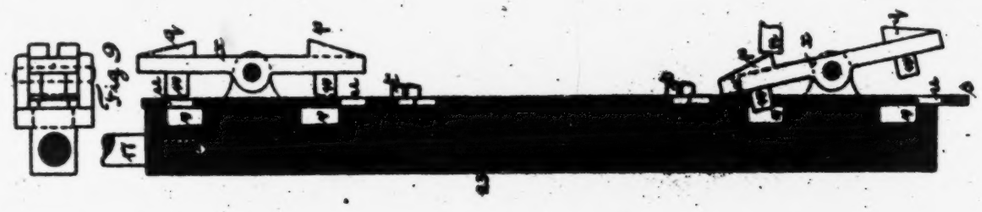
Fig. 9.

Fig. 8.

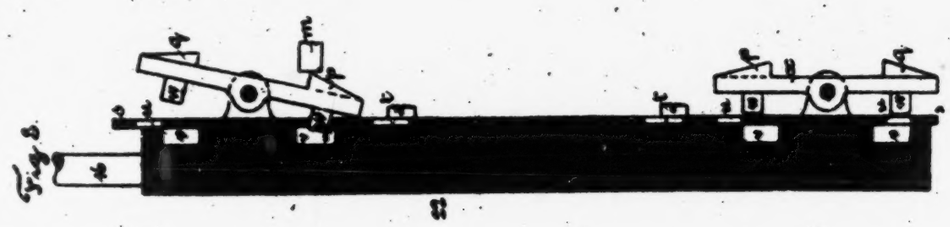
Fig. 13.

Zu der Patentschrift

№ 21332.

PHOTOGR. DRUCK DER REICHSDRUCKEREI.

803
Der. U. p. 5

LAUE & TIMAEUS, DRESDNER STRICKMASCHINENFABRIK
IN LÖBTAU BEI DRESDEN.

Neuerungen an der Lamb'schen Strickmaschine.

Blatt III.

Fig 13

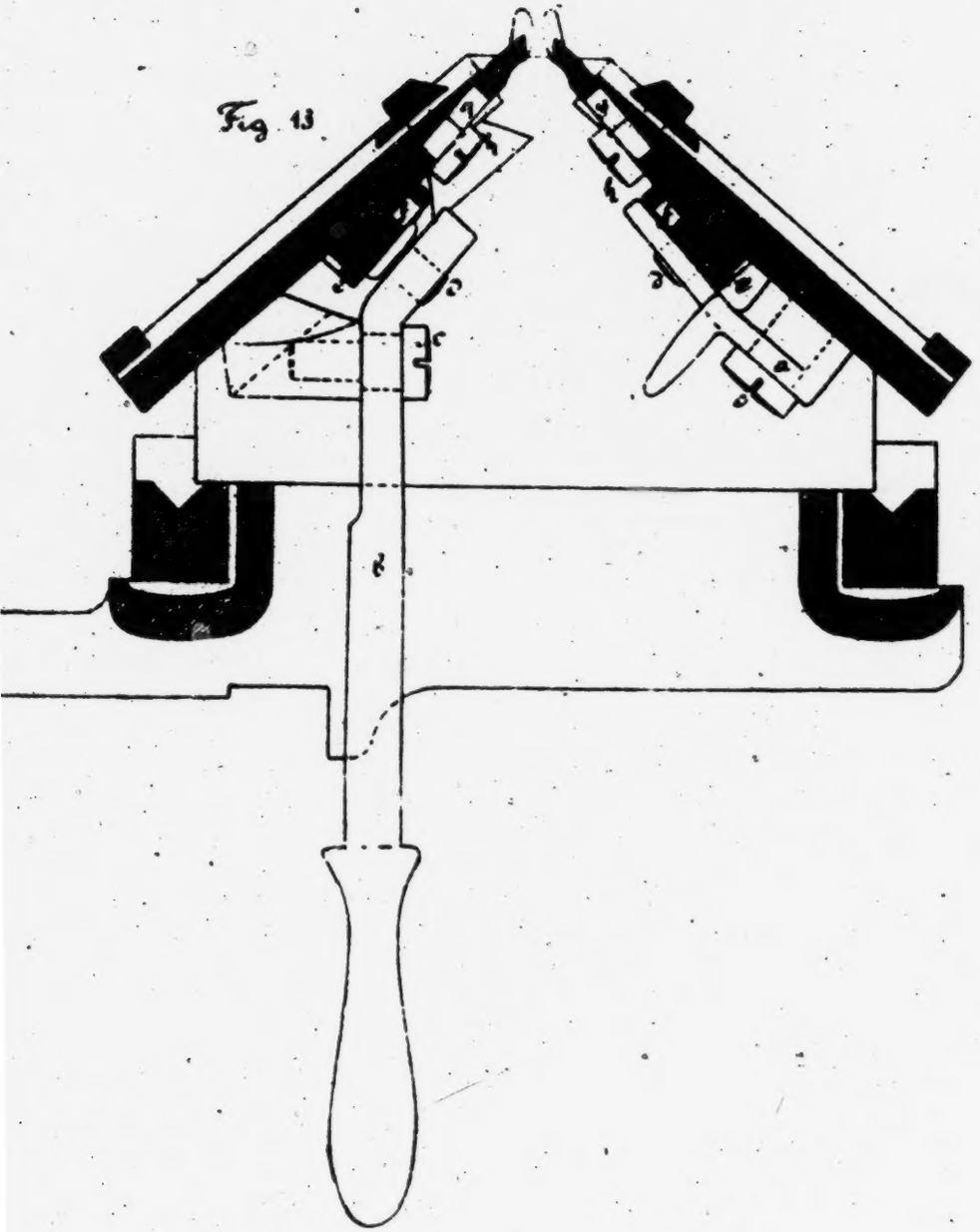

Fig 14.

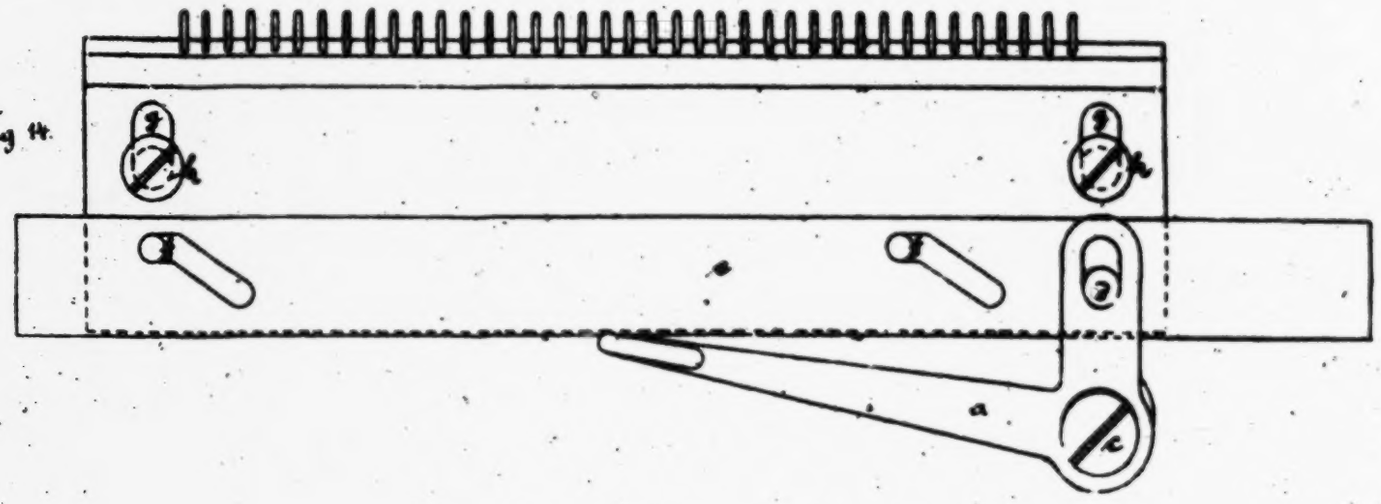

Fig 15

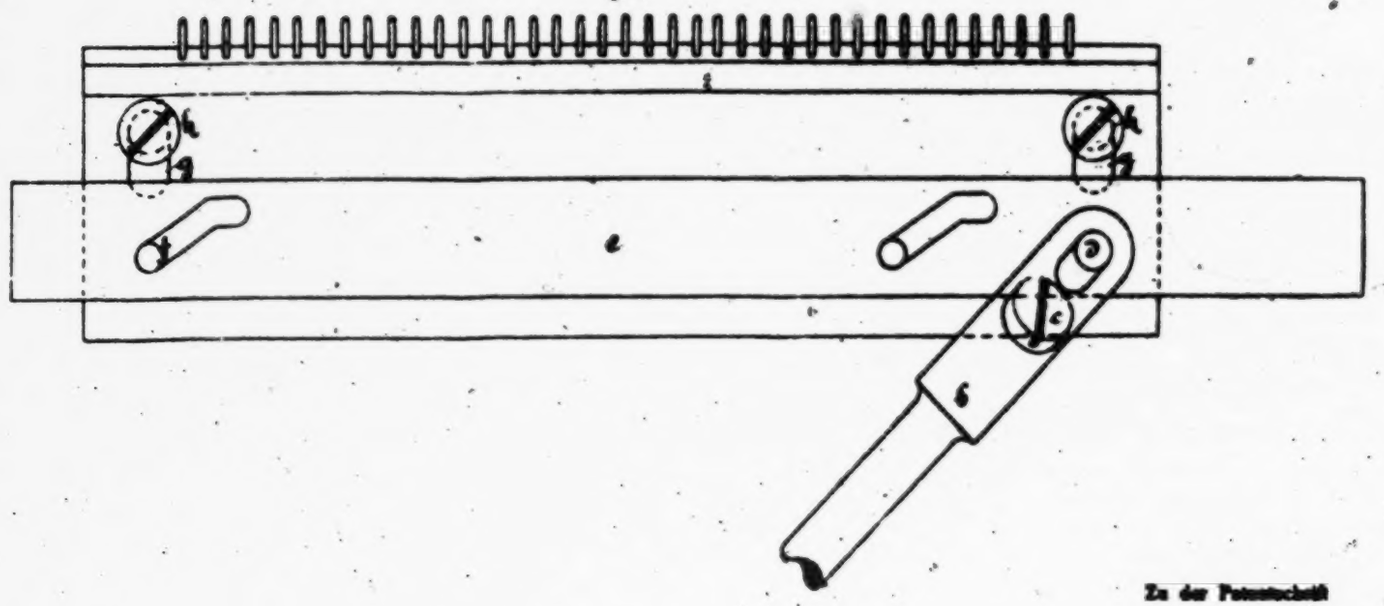

Zu der Patentschrift

№ 21332.

PHOTOGR. DRUCK DER REICHSDRUCKEREI.

KODAK SAFETY FILM

DEFENDANT'S EXHIBIT V 804

A.D. 1887.—N° 13,905.

Black's Impts. in Elastic Looped Fabrics and in the Means for Producing the same.

COMPLETE SPECIFICATION.

Improvements in Elastic Looped Fabrics and in the Means for Producing the same.

I, ARTHUR JOHN BLACK of Stoney Street, Nottingham in the County of Nottingham, Hosiery Manufacturer, do hereby declare the nature of this invention and in what manner the same is to be performed, to be particularly described and ascertained in and by the following statement :—

This invention relates to the manufacture of elastic looped fabrics with a looped pile on the back of the fabric, and extending over a portion thereof, or the whole of the surface, according to the nature of the article to be produced. This class of fabric has been manufactured for some years past on circular, straight, and warp machines, but up to this time, no attempt, so far as I know, has been made to introduce the pile surface into fashioned goods, a fixed catch having been required at the opposite selvages to hold the pile thread apart from the ground thread.—It is manifest, however, that where the selvage needles are constantly shifted to produce the shaping of the goods, such fixed catches were inadmissible.

To produce fashioned underclothing with a pile surface, according to my invention, I take any well-known fashioning machine, for example, the "Paget," provided with a second thread carrier slide, which is controlled in its movements, like the ordinary thread carrier slide, by stops worked automatically in any well known manner. I also employ a peculiar construction of double-throated sinkers to operate upon the two threads, which are laid simultaneously on the needles, and by this means, I indent the threads unequally, so as to form loops of two different sizes, the larger loop being the pile loop.

The threads will, by the peculiar form of the sinker, be laid on the needles at a distance apart equal to the distance between the two throats.

In the accompanying drawings,

Fig. 1 shews in sectional elevation the principal parts of a Paget fashioning knitting machine, modified to suit the purpose of this invention.

Fig. 2 is a front elevation, shewing the front thread carrier bar and slide, with thread carrier attached thereto, illustrating the manner of driving and stopping the same.

Fig. 3 is a diagram shewing, in plan view, 7 needles and 8 sinkers, and the relative position occupied by the threads of the two carriers, previous to, and during the traverse of the carriers.

Fig. 4. shews, detached, the form of the vertical sinker designed for use in the Paget machine, the same being drawn to an enlarged scale.

A, Fig. 1, is a portion of the main framing of the machine, B the traversing slide which carries the driving catches *b b*, and to which is also fitted the incline *b* for depressing the sinkers. These sinkers are arranged vertically as shewn at C, and

665 805

they are supported in grooves formed in the back of the fixed rail A^1, and in the front of the presser bar D.—E E are the needles arranged horizontally, and carried by the needle bar E^1.

A^2 is a fixed bar which forms a race for the ordinary thread carrier slide F, and on the face of the bar A^1 is formed a race for a slide carrying the additional thread layer G, which thread layer is required for the production of a pile surface.—H is the knocking-over bar carrying the knocking-over bits *h*, between which the needles E slide to perform the knitting action.

This sinker, it will be seen, has two throats e e^1, of different depths, the point of entrance to both of which is in the same vertical plane. The deeper throat e is intended to receive the ground thread, and the shallower throat e^1, the pile thread.

The dip of the thread carriers F and G is so arranged with respect to the sinkers, that the thread carrier F will lay its thread under the point of entrance to the deeper throat e, as shown in Fig. 1, while the thread carrier G will lay its pile thread immediately below the point of entrance to the shallower throat e^1.

In rear of the point of entrance to the throat e, the nob dividing the two throats is inclined upwards. This provides for the taking of the ground thread from its carrier with certainty, even though the thread carrier is advanced only one needle beyond the selvage sinker. A good selvage is thus ensured for the fashioned work, and by the use of this sinker, in combination with a pile thread carrier suitably controlled in the length of its traverse, the limits of the pile surface may be varied at the pleasure of the workman.

As the sinkers, charged with the ground and pile threads, are depressed, they will bring down these threads upon the needles, and, continuing their descent, they will first force down the pile thread to form loops between the needles, and then, in completing their descent, act upon the ground thread in the ordinary manner, extending, at the same time, the length of the loops of the pile thread. This double action of the sinkers will be clearly understood by reference to the Diagram Fig. 5, which represents the sinker in its lowest position between the needles.

The needles are now drawn back during the rising of the sinkers, the loops being thereby moved towards the heads of the needles. The movement of the needles brings their beards under the action of the presser D, as shown in Diagram Fig. 6, and the further back movement of the needles will bring the knitted work over the beards, and cause the new loops to be knitted into the work by the subsequent action of the knocking over bits *h*, as illustrated at Diagram Fig. 7.—The vertical movements of the sinkers is effected as usual, that is to say, they are forced down by the incline b^1, on the slide B, to their lowest position (see Fig. 5), and raised to their highest position by the lifting bar I, to clear the work on the needles, and depressed to the position of Fig. 1, ready to receive the threads by means of the bar K.

From the foregoing description it will be understood that, by reason of this new formation of the sinkers, the two threads will, by the descent of the sinkers, be relegated to their respective positions on the needles, and will be differently indented, the pile thread being forced down deeper between the needles than the ground thread in the act of indenting.—In all other respects, the knitting operation proceeds as heretofore. Thus, the fashioning of the goods, or the stopping of the pile thread carrier, to limit its course, when patches of pile are to be formed, will be effected by the well known means common to fashioning and splicing machines.

The fabrics which I propose to produce with a pile surface, or a partial pile surface, are Gent's and children's shirts, pants, trousers, drawers, hose, and half hose, and combinations of shirt and pants known as "combinations"; also Ladies' and children's vests, drawers, combinations, and hose.

When it is desired to thicken a part, say, for example, on the chest and back of goods, such as Gent's and children's shirts and combinations, Ladies' and children's vests and combinations, I arrange for the pile to be formed thereon by adjusting the stop inclines of the pile thread carrier to suit the width of pile surface required.

In adapting my invention to what is known as the Cotton machine, which is provided with horizontal indenting and dividing sinkers, I form the sinkers as shown

at Figs. 8, C being the indenting or jack sinker, and C* the dividing sinker.—In other respects, the mechanism will remain unaltered, except that the incline on the travelling slide will be required to give a longer movement than usual to the sinkers. The means for securing this extended movement is shewn in the sectional elevation Fig. 9, which represents the principal parts of the well known Cotton machine.

It will be obvious that the position of the deep and shallow throats in the illustrated sinkers may be reversed, as shewn in Fig. 10, where the front and higher throat will take the thread for the ground work, while the lower and rear throat will take the thread for the pile.

Having now particularly described and ascertained the nature of my said Invention, and in what manner the same is to be performed, I declare that what I claim is:—

The adaptation to fashioning knitting machines, of sinkers constructed as described, whereby they will take, simultaneously, from two thread carriers travelling in the same vertical plane, two threads; separate them so as to ensure their proper delivery onto the needles, and indent the same on the needles at different depths, so as to produce a pile surface at any desired part of the fashioned knitted goods.

Dated this 12th day of July 1888.

NEWTON & SON,
Agents for the Applicant.

LONDON: Printed for Her Majesty's Stationery Office,
By DARLING AND SON, LTD.

1888.

667

A.D. 1887. Oct 13 Nº 13,905.

807 BLACK'S Complete Specification.

SHEET 1.

Fig: 1.

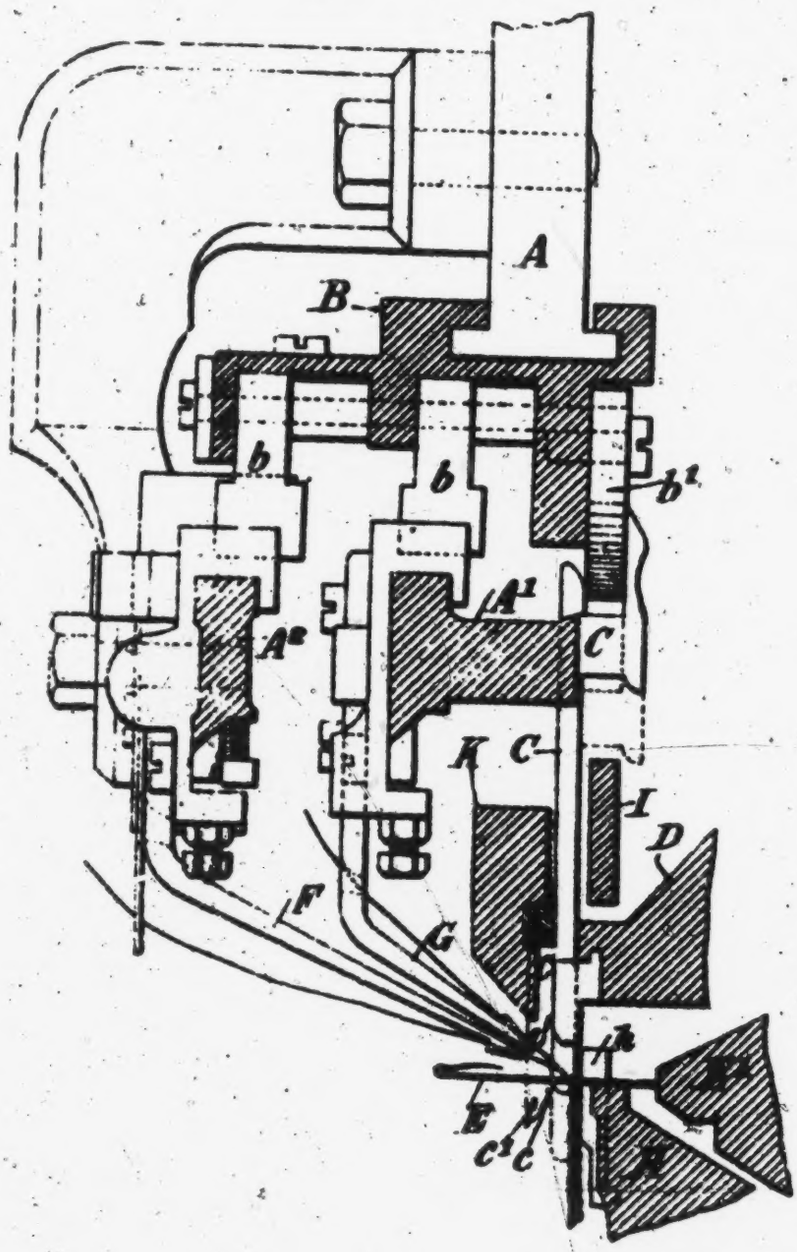

Fig: 2.

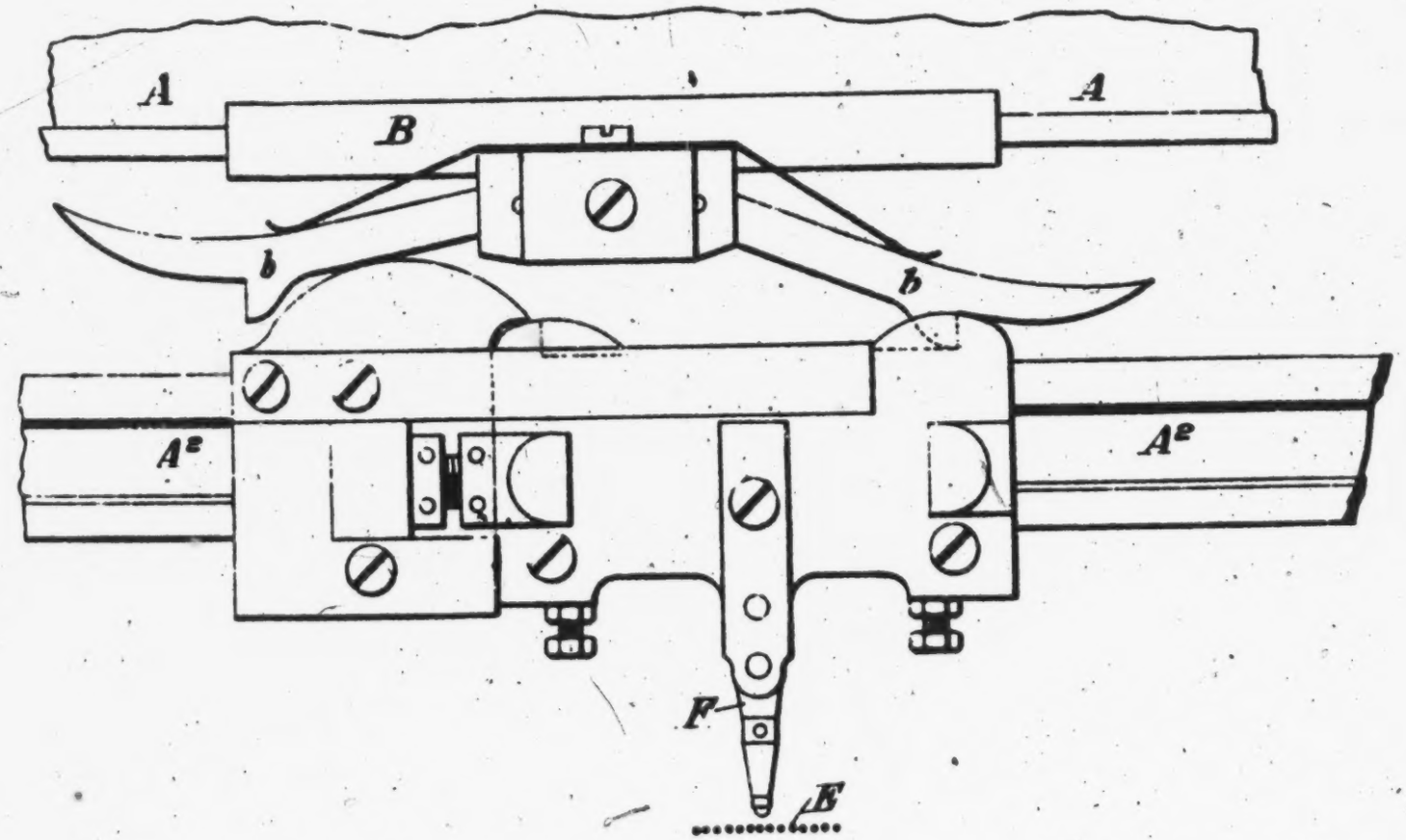

London: Printed by Darling and Son Ltd.
for Her Majesty's Stationery Office. 1888.

13,905 of 1887

808

699

Page Tightly Bound

A.D. 1887. Oct. 13. N° 13,905.

809 BLACK'S Complete Specification.

SHEET 3.

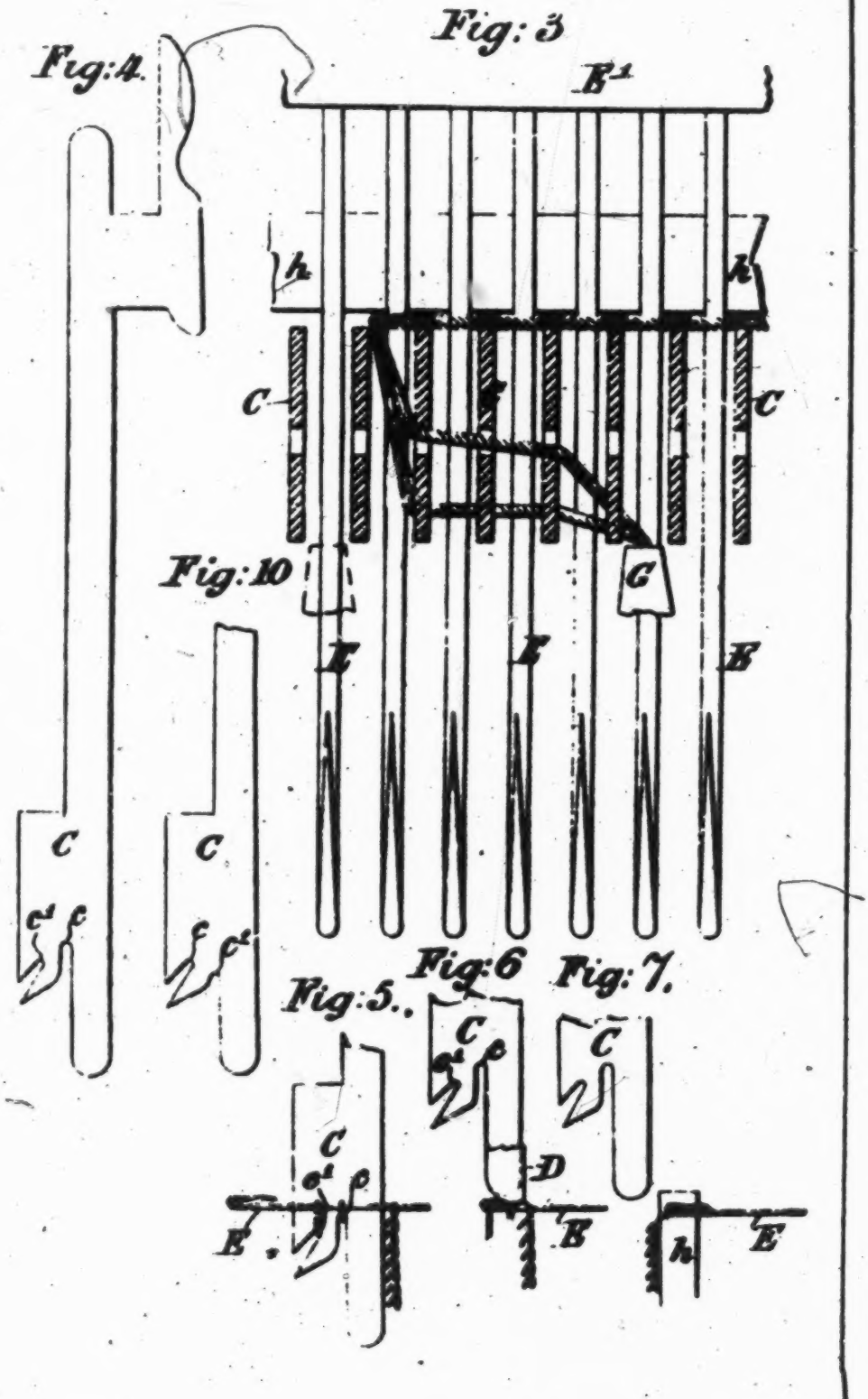

13,905 of 1887

4 SHEET
SHEET 4

Figs: 8

Fig: 9.

DEFENDANT'S EXHIBIT W 811

N° 19,627 A.D. 1891

Date of Application, 12th Nov., 1891
Complete Specification Left, 12th Aug., 1892—Accepted, 17th Sept., 1892

PROVISIONAL SPECIFICATION.

Improvements in the Type of Knitting Machinery generally known in the Trade as "Cotton's."

We, JAMES HENRY WOODWARD, and FREDERICK SHAW, both of Lee Works, in the Town and County of Nottingham, Hosiery Machinists, do hereby declare the nature of this invention to be as follows:—

The chief object of this invention is to obviate the necessity for the attendant who has the machine in charge, having to manipulate the racking arrangement at both ends of the frame after each set of goods or parts of goods has been completed.

At one end only of the machine we fix a worm frame carrying two separate travelling slides.

One portion of the screw is cut with a left hand thread, the other portion with a right hand thread, so that when the screw is revolved the travelling slides move in opposite directions.

To these travelling slides are fixed the stops controlling the various thread carriers and the brackets governing the movements of the narrowing rods.

Dated this 11th day of November 1891.

J. H. WOODWARD.
F. SHAW.

COMPLETE SPECIFICATION.

Improvements in the Type of Knitting Machinery generally known in the Trade as "Cotton's."

We, JAMES HENRY WOODWARD, and FREDERICK SHAW, both of Lee Works, in the Town and County of Nottingham, Hosiery Machinists, do hereby declare the nature of this invention and in what manner the same is to be performed to be particularly described and ascertained in and by the following statement:—

The chief object of this invention is to obviate the necessity for the attendant who has the machine in charge, having to manipulate the racking arrangement at both ends of the frame after each set of goods or parts of goods has been completed.

At one end only of the machine we fix a worm frame carrying two separate travelling slides.

One portion of the screw is cut with a left hand thread the other portion with a right hand thread, so that when the screw is revolved the travelling slides move in opposite directions.

To these travelling slides are fixed the stops controlling the various thread carriers and the brackets governing the movements of the narrowing rods.

The drawings annexed shew apparatus constructed as above described.

Figure 1 is a side elevation and Figure 2 an end view.

A is the ordinary narrowing machine shaft.

B and B¹ are narrowing rods.

C and C¹ are arms fixed to the narrowing rods.

D and D¹ stops fixed to worm-frame slides. The arms C C¹ are held up to these stops by the action of weights not shewn in the drawing—and the position of the stops so controls the position of the narrowing rods B and B¹.

E is the carrier rod driven by friction.

[*Price* 8*d.*]

F a projection from carrier rod coming in contact with sliding stops K and K¹. The stops K K¹ may be raised to put the carrier out of action when desirable.
G is a right and left hand screw controlling slides I and I¹ in worm frame.
H and H¹ are brackets carrying sliding stops K and K¹.
I and I¹ are the worm-frame slides.
J is the worm-frame.
K and K¹ are sliding stops coming in contact with projection F and controlling traverse of carrier E.
N is one of the bracket arms which carry the narrowing rods B and B¹.
M is an extra sliding stop usually fixed in machines of this character in case of another thread carrier being required.
O is a pinion on the screw G by which a step by step revolving motion may be transmitted to it in the ordinary way whenever the narrowing rods are to be shifted.

Having now particularly described and ascertained the nature of our said invention and in what manner the same is to be performed we declare that what we claim is:—

In knitting machinery of the type generally known as "Cotton's" the employment at one end of the machine of a worm frame with two slides carrying stops for controlling the narrowing rods and thread carriers such slides being operated by right and left handed screw threads which when revolved move the travelling slides in opposite directions substantially as described.

Dated this 9th day of March 1892.

J. H. WOODWARD.
F. SHAW.

London: Printed for Her Majesty's Stationery Office, by Darling & Son, Ltd.—1892

SHEET 1

FIG 1.

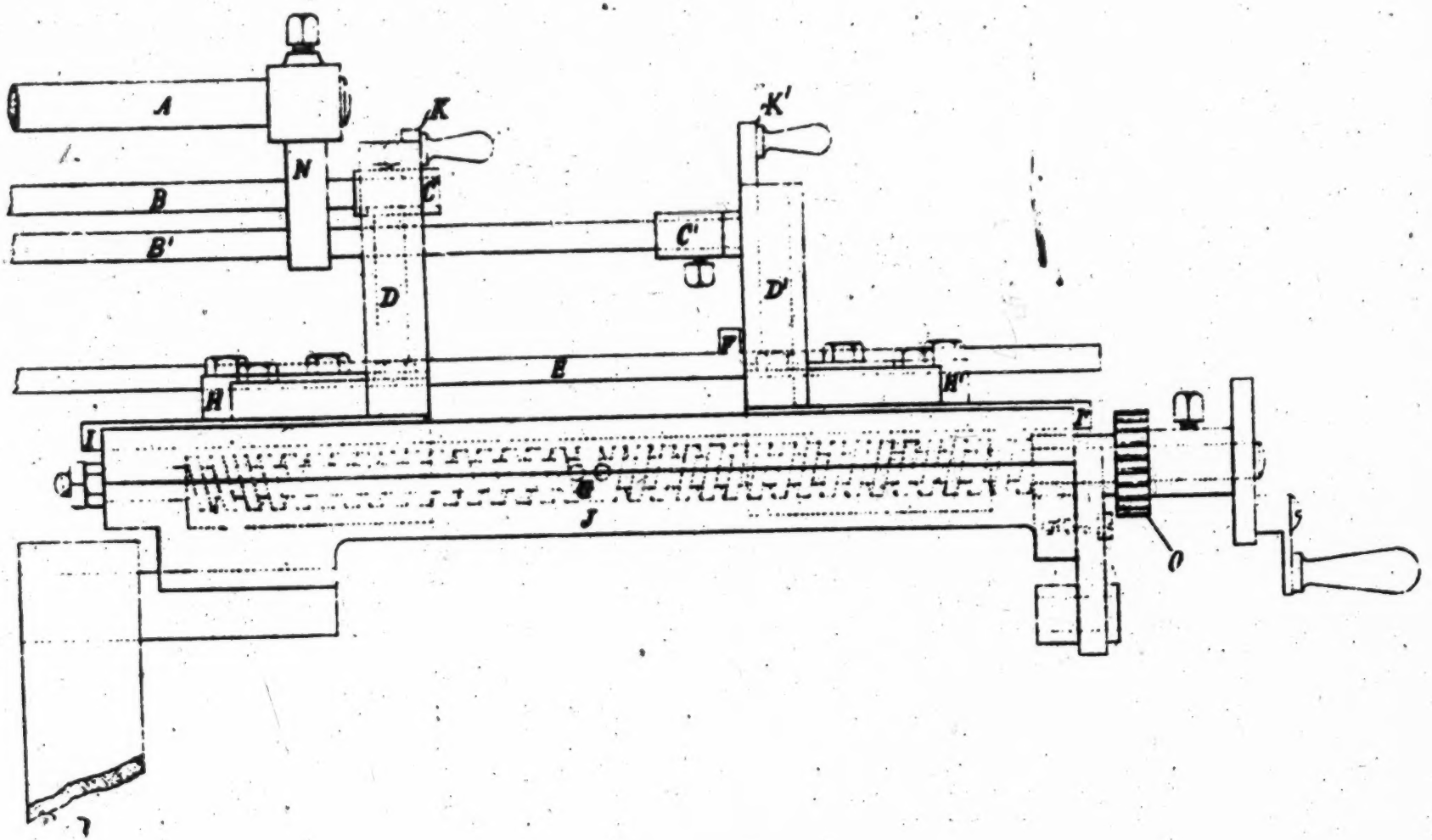

673
813

674

814

19,627 of 1891

2 SHEETS

SHEET 2

FIG. II

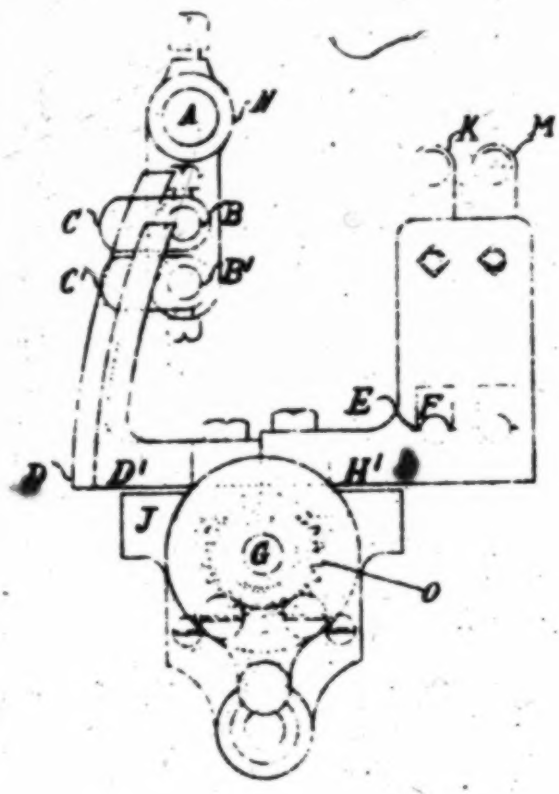

[This Drawing is a reproduction of the Original on a reduced scale]

W/a Malby & Sons, Photo-Litho.

London: Printed by Darling and Son Ltd
for Her Majesty's Stationery Office 1892

DEFENDANT'S EXHIBIT X

In place of this automatic arrangement of mechanism for producing the zigzag stripe, we may provide for the shogging of the bowles on or off the cams which actuate the pawls of the ratchet wheels, and thus arrest or reverse the action of the pawls, and consequently of the traversing screws of the slides, in the manner common in automatic knitting machinery, a counting wheel being provided for timing the movement of the bowles.

Dated this 25th day of September 1889.

NEWTON & SON,
Agents for the Applicants.

COMPLETE SPECIFICATION.

An Improved Mode of Manufacturing Striped Knitted Fabrics.

We, JOHN WILLIAM LAMB, Manufacturer, and JAMES NOON, Framework Knitter, both of Nottingham in the County of Nottingham, do hereby declare the nature of this invention and in what manner the same is to be performed, to be particularly described and ascertained in and by the following statement :—

This invention relates to an improvement in the knitting of hosiery with longitudinal or downright stripes, for which a patent was obtained on the 8th December 1875, No. 4260, by one of us, in conjunction with Samuel Lowe.

We now propose to produce these downright stripes in a zig-zag form automatically, and for this purpose we prefer to use mechanism of the same character as that patented by one of us in connection with the said Samuel Lowe on the 7th December 1877, No. 4649.

In producing the downright stripes, the practice has been to traverse the striping thread carriers alternately two needles to the right and two needles to the left, beyond the width of stripe desired, in order to effect the junction of the stripe with the rest of the fabric.

We now propose to give to the striping thread carriers, instead of this uniform alternate extension of the traverse on opposite sides of the stripe, a continuous traverse on one side of the stripe, until the required amount of deviation is reached, and then to reverse the progressive traverse motion of the thread carriers, and continue the same on the opposite direction for the same length of travel, and so on, reversing the progressive travel as soon as the required deviation is reached. Or we may give the striping or pattern thread carriers a continuous extension of traverse on both sides of the stripe, until the required amount of deviation is reached, and then gradually contract the traverse until the normal length of traverse is regained.

To render the manner of working more clear, we will proceed to trace the progress of the knitting, course by course, and we will afterwards explain the nature of the mechanism for laying the threads in the desired manner upon the needles.

It should be remarked that the striping thread carriers in the patents above referred to, are controlled by means of stop slides, which are automatically advanced and drawn back after every course of work. It is a modification of this means which we now employ, to produce the irregular stripe, so racking in and out the pattern, and certain other stops, as to give the several thread carriers the progressive motions required.

Suppose it is desired to produce a zig-zag stripe, say, 2 needles in breadth, the striping slides will be shifted (say) to the left, to make the overlap to the left, and on the return course, 4 needles will be knitted, no overlay of the thread being made on the right hand. At the next course to the left, 4 needles are knitted, and an overlay on 2 joining needles is made, representing the progressive traverse desired.

At the return course to the right, 4 needles are knitted, but no overlay is made. At the next course, 4 needles are knitted, and an overlay of two needles is again made on the left.

In this way, the pattern stripe is shifted laterally two needles to the left, at each alternate course, until the required amount of deviation is reached. The slides will then be racked in the opposite direction, to shift the progressive motion of the thread

carriers to the right, until the requirements of the zig-zag pattern in that direction are reached. The racking of the slides will now again be reversed, and so on until the zig-zag stripe is completed.

The slides are racked in and out, as required, by a train of gear wheels, which impart an axial motion to the traversing screws of the slides, as will be hereafter explained.

In the accompanying drawings: Fig. 1 is a transverse sectional elevation of a portion of the upper part of a cotton knitting machine, shewing our new arrangement of supplementary thread carrier bars, and the mechanism for driving the same.

Fig. 2 is a partial end elevation of the same portion of the machine, illustrating the stop mechanism for the supplementary bars.

Fig. 3 is a plan view of a portion of the right hand end of the machine, shewing one division with its thread carriers and carrier bars, the pattern and narrowing slides, and the stops which they carry, and Fig. 3ª is a similar view of the slides and stops at the left hand end of the machine.

Fig. 4 is a partial front elevation of the right hand end of the machine, shewing the mechanism for automatically racking in and out the slides carrying the stops.

Fig. 5 is a partial end elevation of the same.

Fig. 6 is a front view of a central portion of the mechanism, shewing the counting wheel, and the means for governing the pattern-slide racking mechanism at opposite sides of the machine.

Fig. 7 shows inside view the draw cam which is designed to give an extra motion to the thread carriers for laying the thread on the joining needles.

Fig. 8 is a diagram illustrating the knitting of a zig-zag stripe course by course; and Fig. 9 is a similar diagram of the knitting of a modified form of stripe.

As the knitting mechanism which we employ is very similar to that shewn in the specification drawings of the patent of 1877 above referred to, and is in all respects, except the striping mechanism, like the cotton machinery in common use in the hosiery trade, we shall limit the detailed description of the drawings to the mechanism designed for producing the irregular striping, referring merely by letters to the parts common to the ordinary cotton machine.

a, Fig. 1, are the needles, a^1 the sinkers, *c* c^1 are the thread carriers. A is the slur bar, upon which slides the slur box B. C C^1 Figs. 3 and 3ª are the narrowing slides, mounted on brackets D forming part of the main framing. E, Figs. 4 & 5, is the cam shaft, from which all the motions for the working parts of the machine are derived. F. F^1 are the striping or pattern slides mounted on the brackets D. The slides C. C^1 are fitted with automatically adjusted stops, as usual, and the pattern slides F, F^1 carry stops G, G^1 which control the movements of the supplementary thread carrier bars, and also stops H. H^1, which control the inward movements of the ordinary cotton thread carrier bars. These last mentioned bars are numbered 1 and 2, and the numbers 3, 4 and 5 indicate three supplementary thread carrier bars, 3 and 4 serving to lay the thread for the stripes, and 5 to lay the thread for the intermediate portion of the fabric. The several thread carrier bars 1, 2, 3, 4 and 5, are driven by friction from the slur box B, two friction boxes on the slur box serving, as usual, to operate the bars 1 and 2, and two other friction boxes for operating the bars 3 and 4, after the manner described in a patent granted to Lamb & Lowe dated 1 November 1878, No. 4421. *b*, Fig. 3, shows one of the two bars which receive motion from the slur box, and communicate the same to the thread carrier bars 3 and 4. Standing up from these bars *b*, are standards b^1, from each of which projects a finger b^2, that enters a forked projection fitted to the bars 3. 4. These fingers are capable of being slidden up out of gear with their respective forks, to throw the carrier bars out of action. For operating the thread carrier bar 5, the slur box B is fitted with a standard b^3, which carries, at its upper end, a finger b^4, that enters a fork projecting from a friction box which embraces the thread carrier bar 5.

We have said that the stops G G^1 which control the supplementary thread carrier bars, are mounted on the pattern slides F F^1, and that the same slides also carry the stops H H^1, which control the inward movement of the ordinary cotton

677
817

thread carrier bars. These stops, consist of brackets fitted with adjustable screws, the heads of which arrest the movements of the bars, to limit the motions of the thread carriers. The screws of the stops G G^1 serve to control the bars 3, 4, and 5, and they are so arranged that the heads of the screws for operating on the bars 3, 4 face inwards, while the heads of the screws for controlling the bar 5, face outwards.

In like manner, the heads of the screws fitted to the stops H H^1 face outwards, in order that the bar 1 may be arrested by the stop H on the right hand side of the machine, while moving with the striping thread carrier bars to the left, and the bar 2 may be arrested by the stop H^1 on the left hand side of the machine, while moving to the right with the striping thread carrier bars.

The object of this arrangement will be clearly understood when the knitting operation is explained with reference to the diagrams Figs. 8 and 9.

The slides C C^1 and F F^1 are fitted, as usual, with traversing screws, which are actuated by spur gearing. The gearing for the slides F F^1 is illustrated by dots in Fig. 5, which shews also the mechanism for imparting motion to the slide F in opposite directions, for the purpose of giving to the stops carried by that slide, a traverse motion in opposite directions. A duplication of this mechanism is employed for working the slide F^1, Fig. 3^a, at the opposite end of the machine.

I, Figs. 4 and 5, is a horizontal shaft, which turns in bearings in the framing. Upon this shaft are keyed two ratchet wheels i. i^1, their teeth being reversed, to receive driving pawls i^2 i^3 on opposite sides of these wheels, for the purpose of imparting rotary motion in opposite directions to the shaft I. Keyed to this shaft is a spur wheel i^4, which gears into the train of spur wheels connected with the traversing screw of the slide F. As, therefore, rotary motion is imparted to the shaft I in either direction, a corresponding traverse motion will be given to the slide F, and the several stops which it carries. I^1 is a segment shaped shifting shield mounted on the axle I. This shield is interposed between the ratchet wheels i i^1 and the pawls i^2, i^3, for the purpose of controlling the action of the pawls, and throwing one or other, or both, out of contact with their respective ratchet wheels. The pawls are pivotted to a rock lever I^2 fulcrummed on the frame of the machine, and carrying a bowl which rests upon a cam I^3 on the cam shaft E. The rotation, therefore, of this shaft, will cause the cam, through the lever I^2, to lift and lower the pawls, and thereby effect the rotation of the shaft I. To provide for the proper action of these pawls, or to ensure their inaction, the segment shield I^1 receives an axial motion from a tappet chain I^4 on the counting apparatus. This shield is connected by a link i^5 to an arm i^6 of a rock shaft I^5 having its bearing in the main framing. A shorter arm i^7 of this rock shaft connects, by a link i^7, with a rock lever I^6, fulcrummed on the frame of the machine, and bearing, at its front end, on the travelling tappet chain I^4. As, therefore, the tappets pass under this rock lever, the position of the segment shield will be shifted according to the requirements of the work in hand, lifting the pawl i^2 or i^3 from its ratchet wheel, and allowing the other pawl to act upon its wheel, and impart an axial motion to the shaft I, and so to the traversing screw of the slide F. Or the shield will be shifted to an intermediate position, so as to throw both pawls out of action, and thus provide for the momentary quiescence of the slides.

The tappet chain I^4 is provided with 2 sets of tappets, which have such relation to each other, as to enable the slide F^1 to move in exact correspondence with the slide F, and thus shift the position of, or contract or enlarge (as the case may be) the traverse of the supplementary carrier bars 3, 4, and 5, and the inward movement of the thread carrier bars 1, 2.

Fig. 6 shews two rock levers I^5 I^{5a}, as bearing on the tappet chain, the lever I^{5a} forming a portion of the mechanism for driving the spur gearing of the slide F^1, which mechanism is a duplication of that just described for actuating the gearing of the slide F.

For the purpose of overlaying the joining needles where required, we use, in place of the mechanism hitherto employed, a modified form of the draw cam, as shewn at K, Fig. 7, which modification consists in the extension of the cam face beyond the point ✠ (which indicates the end of the traverse of the slur box), making it

678

818

concentric for a short distance, so as to obtain a dwell, and then giving it a slight incline to produce the overlay of the joining needles. This draw cam, as is well understood, acts through the sliding bar K¹, to impart a to and fro motion to the slur-box B, Fig. 1. The extension, therefore, of the cam surface beyond the point *, will ensure the requisite dwell for the slur box, and its subsequent further movement, to produce the above mentioned result.

Referring now to the diagram Fig. 8, the vertical lines of which represent one "division" of needles, we will proceed to explain the course of knitting to produce two zig-zag stripes in, say, the leg of a hose.

On commencing this work, the thread carriers bars are arranged as shewn on the plan views figures 3 & 3*, that is to say, all the thread carriers are brought to the right hand side of their respective portions of the division. They are now simultaneously moved to the left, to lay the thread for the first course of striped work. After this traverse, and during the knitting of the work, the striping slides F F¹ are moved further to the left, to the extent of 2 needles. The motion of the thread carriers is then reversed, to lay thread for the 2nd course. During the knitting of this course, the slides F F¹ remain stationary, and during the knitting of the third course, the slides are again moved to the left. While the 4th course is being knitted, no movement of the striping slides takes place, and this order of working may be continued so long as the deviation of the stripe to the left hand is required.

Suppose, for example, the knitting is carried on up to the 11th course before changing the direction of the stripe, and the slides F F¹ are moved to the left during the knitting of that course, then, to reverse the direction of the inclined stripe during the knitting of the succeeding course (the 12th), the striping slides will be moved to the right hand. At the next course (the 13th), the slides will remain stationary, and will be again moved to the right hand at the 14th course, and so on at every other course, as long as the deviation to the right is required to continue.

It will be understood that the traverse of the intermediate and outer thread carriers up to the edges of the stripes being governed by stops carried by the slides F F¹, will of necessity have their traverse lengthened or shortened in such a way as to lay thread for the joining needles of the stripes at both edges of the same. Thus, the joining needles will be alternately supplied with a thread from the intermediate or outer carrier, and a thread from the striping carrier, and the needles in the "division" will be supplied with one thread only at every traverse of the thread carriers for a new course of work.

From the foregoing explanation, it will be understood that the progress of the stripe may be continued to any desired length through the work. If, however, it is desired to stop the striping, and to carry on plain knitting beyond the stripe, the thread carrier bars not required for further use, are to be locked out in the usual way.

Diagram Fig. 9 shews a mode of working to produce a variation in the form of the stripe, giving it a gradual increase in width from both sides of the stripe, until the maximum width is attained, & then a gradual decrease in width until the normal width of the stripe is reached. By this course of working, varieties of patterns within circumscribed limits may be produced, and thus a distinctive character may be given to the work.

The vertical lines in the diagram Fig. 9 represent the needles of one "division," and the horizontal lines the courses of work, the normal width of the stripe being equal to 2 needles, with a lap on two joining needles, but on opposite sides at each course. To produce the work indicated in Fig. 9, the machine has its striping slides arranged to provide for a traverse equal to four needles for the striping thread carrier bars, and both slides are simultaneously moved at the knitting two needles to the right, when the traverse of the carriers is to the right, and two needles to the left, when the traverse is to the left, as long as the downright stripe is required.

A diamond or lozenge shaped extension of a two needle stripe shewn in the diagram is formed by 7 courses in the following manner :—

The right and left hand slides are simultaneously moved outwards to the extent of 2 needles, and thus a traverse of the striping thread carriers is correspondingly

extended, so that at the next course, say, to the right, 8 needles may be overlaid with thread instead of 4. When this course (the 1st of the diamond or lozenge shaped figure) is knitted, both slides will be again moved 2 needles in opposite directions, as before, so that, for the second course of the figure, thread will be laid to the left over 12 needles. When this course is being knitted, the slides will be again simultaneously moved out, the further to increase the width of the figure, and, for the 3rd course (to the right), 16 needles will be supplied with thread. The limit required by the pattern being now reached, bothe slides will, during the knitting of this course, be racked in the same direction two needles to the left. The right hand slide will carry in the carriers which it has served to stop. On the knitting of this, the 4th course, both slides will be moved in, the left hand slide, say, carrying with it inwards the carrier bars which it has served to stop the extent of two needles, so that at the next course, 12 needles will be supplied with thread. While this course is being knitted, both slides will be again moved inwards, the right hand slide carrying onwards with it the carrier bars it has stopped, and, at the succeeding course, 8 needles will be supplied with thread.

While knitting this course, the slides will be again simultaneously moved inwards, and the left hand slide will carry in the carrier bars, so that at the 7th course, four needles only will be supplied with thread, to resume the knitting of the normal width of stripe. At the knitting of this course, the right hand slide will be moved out, to allow thread to be laid upon the joining needles, the left hand slide at the same time moving inwards. The simultaneous moving of the slides alternately to the right and left, at the time of the knitting of each course, can now be continued as long as a straight stripe of two needles in width with the joining needles is desired to be knitted.

The traverse of the thread carriers for laying the thread for the fabric intermediate of the colored stripe or figure pattern, and also of the selvage thread carriers on their inward movement, being governed by stops on the striping slides, as above explained, will be limited as the colored stripe or figure increases in width, and lengthened as the stripe or figure decreases in width. The outer traverse of the selvage carrier bars, it will be understood, is governed, as usual, by the stops of the narrowing slides.

Having now particularly described & ascertained the nature of our said invention & in what manner the same is to be performed, we declare that what we claim is:—

The mode above described of producing irregular striping in knitted fabrics, such mode consisting in controlling the thread carriers by the use of the pattern slides, to which a progressive motion is imparted either in the same or in opposite directions, for the purpose of shifting the field of traverse of the carriers which such slides control, or of enlarging and contracting the length of traverse of the thread carriers, as & for the purpose set forth.

Dated this 25th day of June 1890.

NEWTON & SON,
Agents for the Applicants.

London: Printed for Her Majesty's Stationery Office, by Darling & Son, Ltd.—1890.

820

A.D. 1883 Sep. 25. N° 15,129

LAMB & *another's* COMPLETE SPECIFICATION.

6 SHEETS. SHEET 1

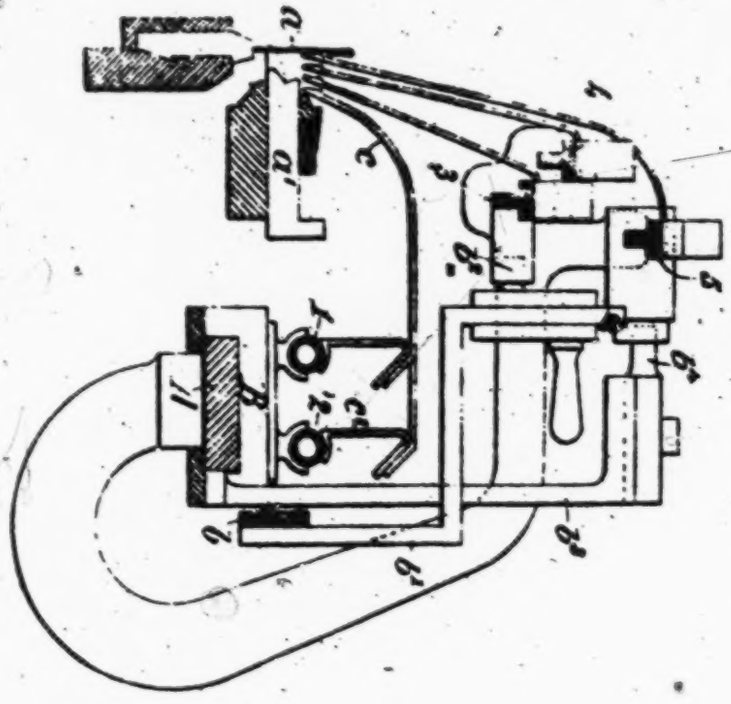

Fig. 1.

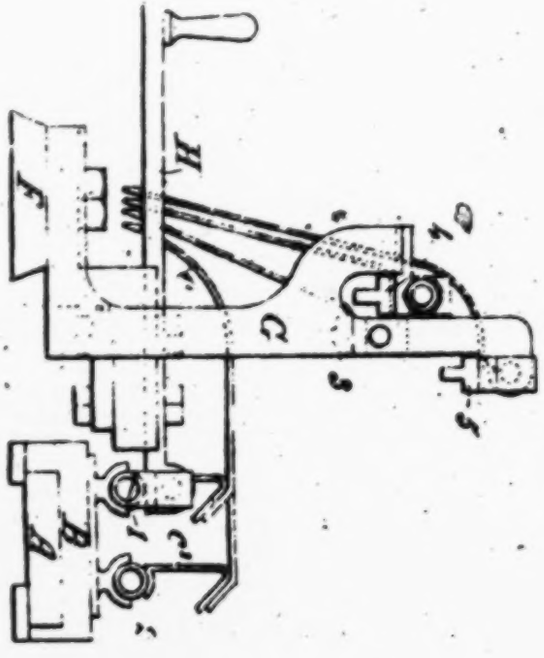

Fig. 2.

[This Drawing is a reproduction of the Original on a reduced scale.]

London: Printed by Darling and Son, Ltd. for Her Majesty's Stationery Office. 1890.

Malby & Sons, Photo-Litho. 3/6

Fig. 3a

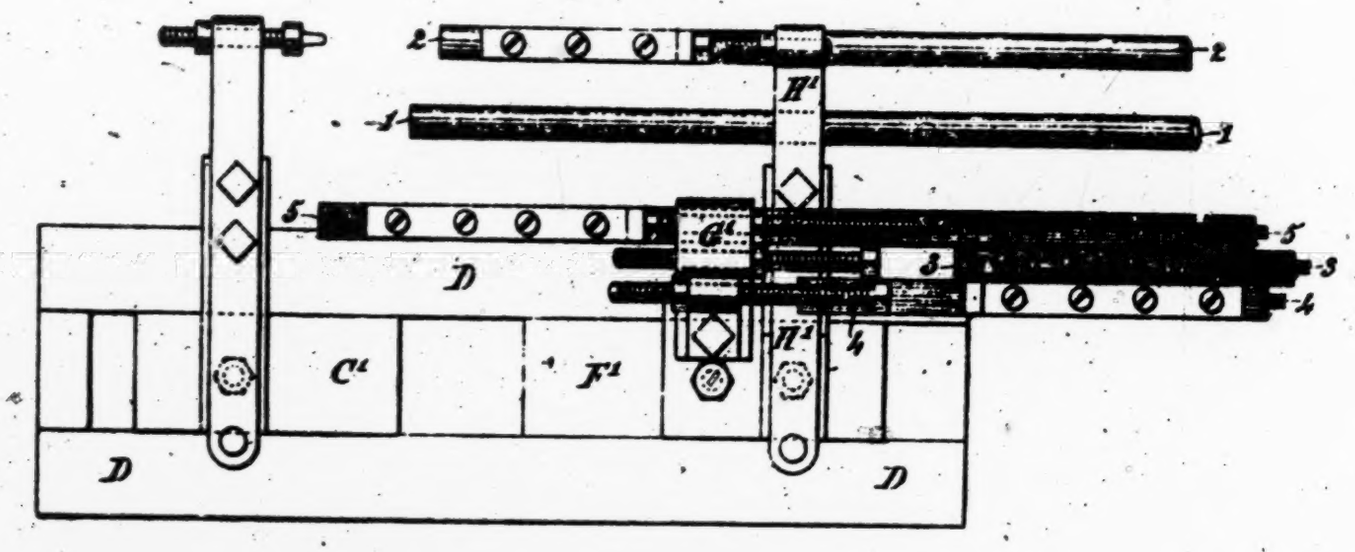

Fig. 3.

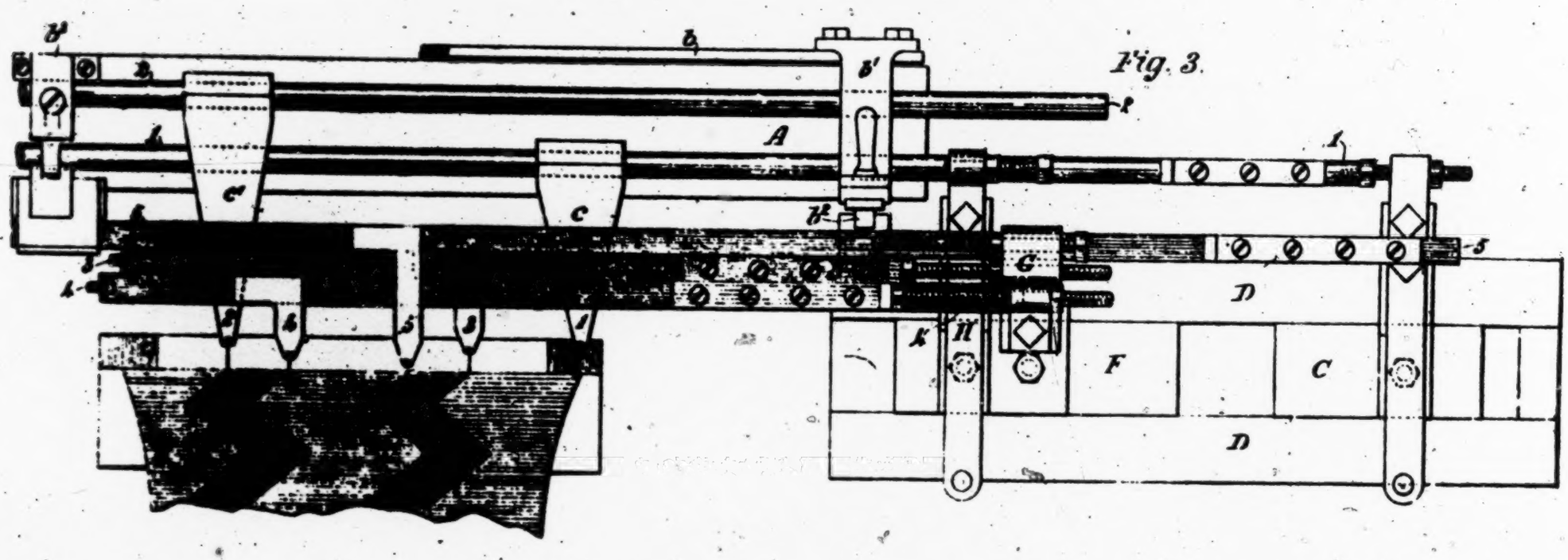

[This Drawing is a reproduction of the Original on a reduced scale]

London: Printed by Bemrose and Son Ld.
for Her Majesty's Stationery Office 1890

822
DEF. X. P.B 77
4 SHEETS
SHEET 4

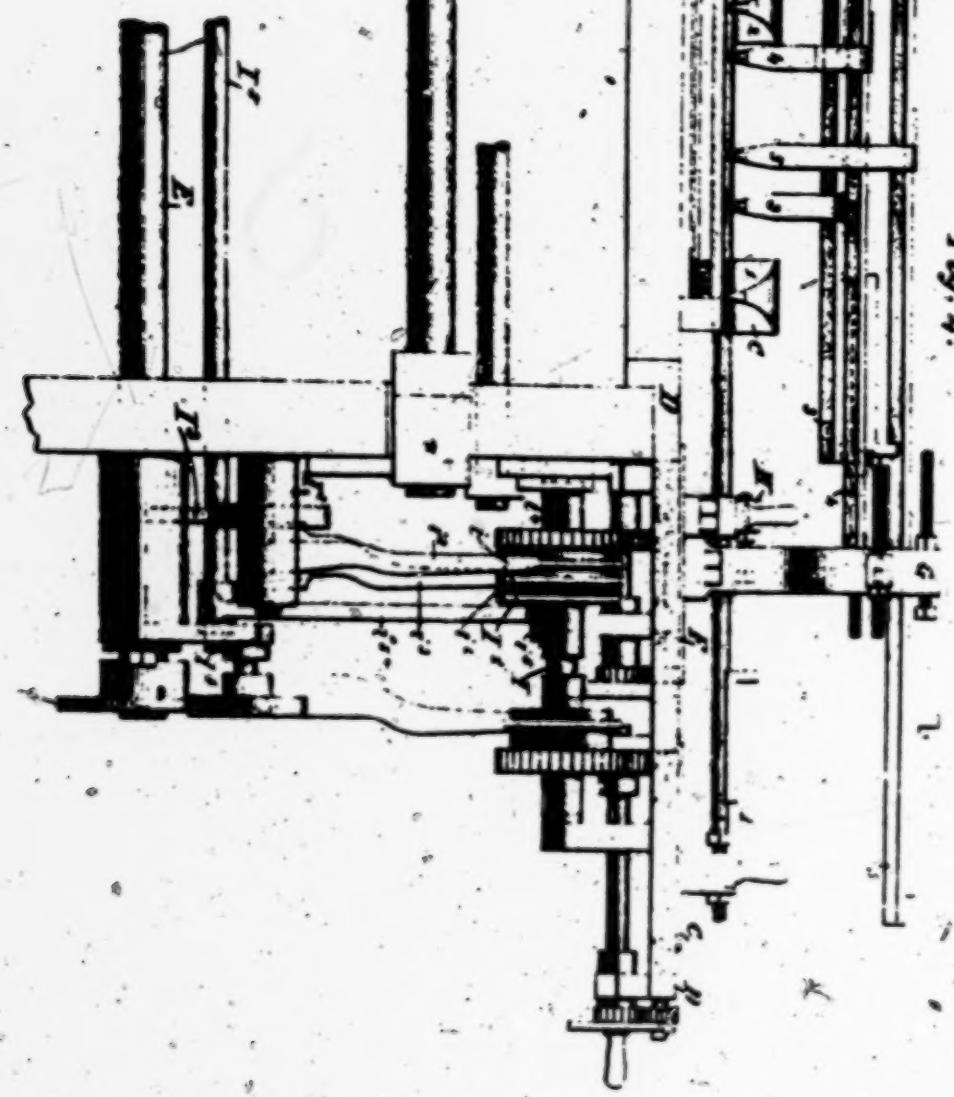

Fig. 6.

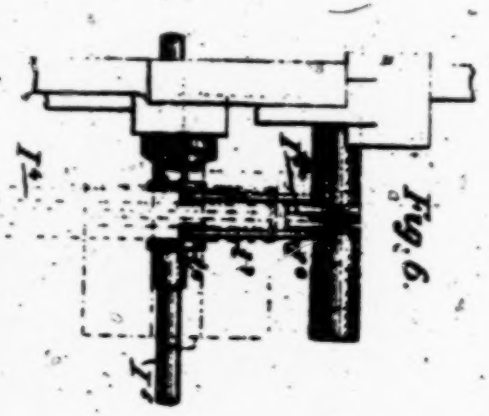

Fig. 4.

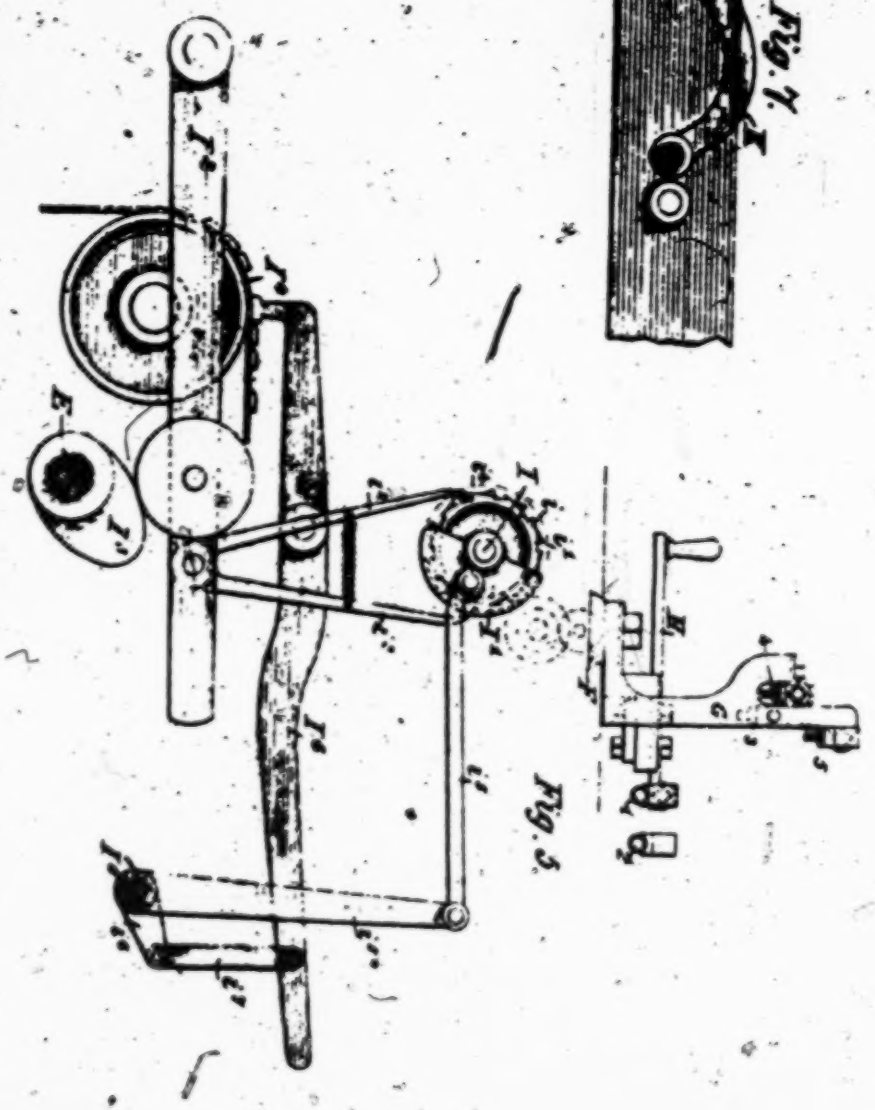

Fig. 5.

Fig. 7.

London. Printed by Darling and Son Ltd.
for Her Majesty's Stationery Office. 1890.

A D 1889. SEPT 25. N° 15,129.
LAMB & another's COMPLETE SPECIFICATION.

823
DEP. X. p. 9. 78
2 SHEETS.
SHEET 2.

Fig. 8.

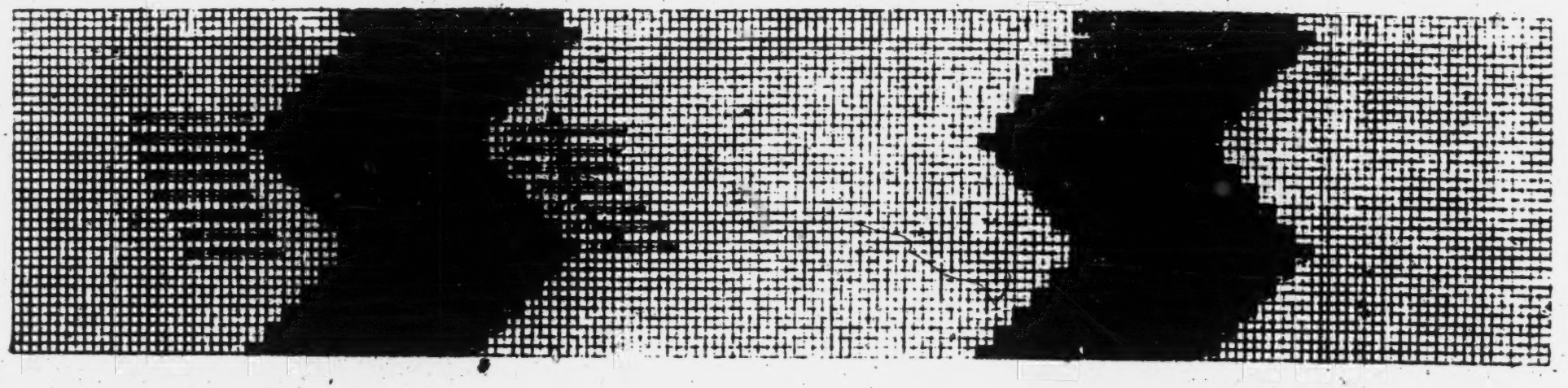

Fig. 9.

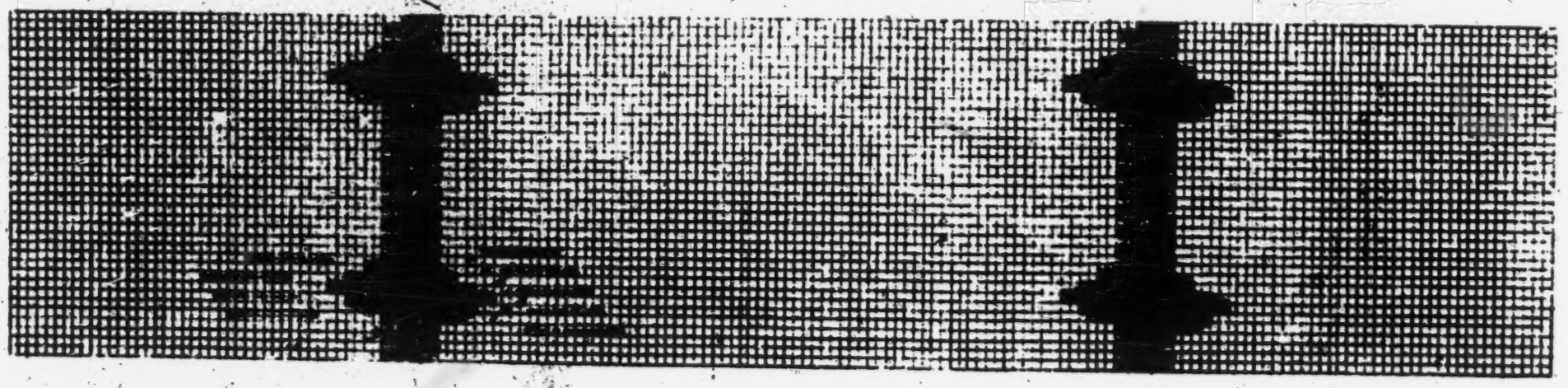

[This Drawing is a reproduction of the Original on a reduced scale.]

London: Printed by Darling and Son Ltd.
for Her Majesty's Stationery Office. 1890.

DEFENDANT'S EXHIBIT Y 824

N° 1967.—A.D. 1890.

Clarinbourn's Improvements in Knitting Machines

COMPLETE SPECIFICATION.

Improvements in Knitting Machines.

I, JOSEPH AUGUSTUS CLARINGBURN, Hosiery Machinist, Liverpool Street, Nottingham, do hereby declare the nature of this invention and in what manner the same is to be performed, to be particularly described and ascertained in and by the following statement :—

My invention relates to straight bar knitting machines known as Cotton's Patent, and is for improvements on the invention described in Specification No. 18,461 A.D. 1888, in which a wide set of fashioning points are capable of being attatched and detatched to and from the ordinary fashioning points, the wide sets being turned up when not required, but owing to the exactitude required when brought into action considerable time is wasted in adjusting the same. When the wide points are working fashionings may be made at some distance from the selvage of the fabric and when they are turned up fashionings may be made by the narrow points on the selvage only. In the Specification referred to there are two screws used and the nut of the is prevented from turning by sliding in the nut of the lower screw and consequently the breadth of the fashioning is limited.

Now the object of my invention is to enable two sets of fashionings to be made, one on the selvage and one at some distance from the same, the two sets of fashionings being made either upon the same row of loops or upon different rows as may be required, and in order to carry out my invention, two separate sets of fashioning mechanism are required, and in applying these it is necessary to have two separate sets of fashioning cams in addition to the ordinary knitting cams, and to be able to bring any one of the sets of cams into action the cam shaft must be capable of being moved from any one set of cams to any other set.

The needles, thread carriers, and the other ordinary parts of the machine are the same as usual and the motions of these parts are well understood, I have therefore not described or shown any of these parts, except where necessary to explain my invention and in order that the same may be better understood I have attatched five sheets of drawings which show the fashioning apparatus at one end of the machine, that at the other end being a duplicate and the same parts in all the drawings are referred to by the same letter or figure.

Fig. 1 is an end elevation of the screws used for actuating the fashioning points, and the mechanism for working the same.

Fig. 2 is a front elevation of the parts shown in Fig. 1.

Fig. 3 is a detail showing the connection between the fashioning point bars and the screw boxes.

Fig. 4 is a front elevation of one breadth of needles showing the two sets of fashioning points and the bars carrying the same.

Fig. 5 is an end elevation of the fashioning points at the left hand side of each division of needles, showing the same attatched to the lower fashioning point bars.

Fig. 6 shows the points at the right hand side of the division of needles the same being connected to the upper fashioning point bars.

Fig. 7 represents the arrangement for carrying the two sets of fashioning bars which are both shown in their highest position.

Fig. 8 represents the same arrangement when one set of bars have been lowered.

Fig. 9 is a section of the cam shaft and the parts used for shogging the same.

Fig. 10 is a front elevation of Fig. 9.

Fig. 11 is a plan of the same.

Figs. 12 & 13 details of cams.

Referring to Figs. 1 to 8 A represents the ordinary fashioning screw, mounted in bearings carried by a bar B which is fixed to the machine frame, and on the screw is the screw-box C to which a bracket *a* is attatched ; to prevent the nut turning the bracket slides upon a fixed rod *b*, the nut also carries a bar *c* for

685

825

actuating the fashioning point bar D carrying the narrow points F, the other set of narrow points G being attatched to the bar E and actuated from the other end of the machine. Fixed on the end of the screw A there are two ratchet wheels *d* & *e* which are actuated by pauls *g* & *f* carried by a lever G¹ pivoted on any suitable support and actuated by a cam H on the cam shaft J. This cam H is made double the width of the other cams so that when the cam shaft is shogged one step the narrow points F & G are moved endways but when the shaft is shogged two steps the narrow points are moved either before or after the wider ones.

The screw A is provided with a handle *h* a catch wheel *j* and a spring *k* so that the screw can be turned by hand, and held in position. There is also a cam K turning on an axle *l* and is used for holding either of the levers *f* or *g* out of action: these are connected by a spring *m* so that when one is held out of action the spring pulls the other into action.

The brackets carrying the screw A are produced upwards & form bearings for a screw L provided with a nut M which is prevented from turning by causing it to slide between two fixed bars *n*, the nut is also provided with a projecting piece *o* which actuates the bar N carrying the wide points O at the right hand side of each division of needles *p*, the wide points P at the left hand side of each division of needles being carried by a bar Q which is actuated by a similar arrangement at the other end of the machine. Upon the screw A and forming a bearing for the same is a bush which projects each side of the end bracket *q* and upon it there are fixed four ratchet wheels *r*, *s*, *t*, & *u*, also a spur wheel *v* which drives another spur wheel *w* fixed upon the top screw L, so that any movement given to any of the ratchet wheels *r*, *s*, *t*, & *u* is transmitted to the screw L and the fashioning points connected to the same. The wheels *v* & *w* may gear into each other and a screw used with a thread opposite hand to that of the screw A, or an intermediate wheel may be used between the wheels *v* & *w*, both screws being then the same hand, or the ratchet wheels *r*, *s*, *t*, & *u*, may be fixed on the screw L and actuated direct. The screw L is provided with a handle *x*, catch wheel *y* and spring *z* for turning it by hand and holding it in position.

The ratchet wheels *r* & *s* are provided with pauls R & S carried by a lever V suitably pivoted on a fixed spindle and actuated by a cam W, while the ratchet wheels *t* & *u* are provided with pauls T & U carried by a lever X which is actuated by a cam Y, the lever being pivoted on the same spindle as the lever V. The pauls R & S are thrown in and out of action by the same cam K as operates upon the pauls *f* & *g* but the pauls T & U are automatically thrown in and out of action by a cam Z which has an odd number of faces and is turned round half a face at each movement by a ratchet wheel A¹ connected to it by a collar *a*¹ and actuated by a paul B¹ carried by a lever C¹ which is operated upon by a cam D¹.

According to the arrangement of cams, ratchet wheels and pauls just described, I am enabled when the shaft J is shogged one step, to throw the cam H into action and then make fashionings on the selvage of the fabric by the narrow points only, and when the shaft is shogged to the second step, the cam H will move in or out the narrow points and the cam W the wide points, the direction in which both sets of points are moved depending upon the position of the cam K. The cam Y is also acting and causes either the paul T or U to act upon the screw L and give an additional movement to the wide points which may be in the same direction as the movement given them by the cam W or in the opposite direction.

The bars N & Q Figs. 7 & 8 for the wide sets of points are carried in brackets *c*¹ capable of turning on a shaft *d*¹ carried in bearings on the arms *e*¹ fixed upon a rocking shaft *f*¹, and the bars D & E for the narrow sets of points are carried in brackets *g*¹ by a shaft H¹ & J¹ the arrangement being similar to that for the bars N & Q, the two sets being so arranged that either can be brought into action without interferring with the other. The mechanism for raising and lowering both sets is of the usual description and both sets of points are fitted with filling-up points *k*¹ which are worked by arms *l*¹ and shafts *m*¹ in the usual manner.

The mechanism for shogging the cam shaft is shown in Figs. 9, 10 & 11. The

cam shaft has fixed upon it a shogging cam A^2 made with three cam faces a^2 b^2 & c^2 and parallel with the cam shaft I place a short shaft B^2 which carries a main shogging lever C^2 provided with a cam truck d^2 which rides upon one of the three cam faces a^2 b^2 or c^2 and when on the first face a^2 the shaft is held from end movement by the truck d^2 riding between the face a^2 and a face e^2 of a counter cam D^2. When the truck d^2 is on the face b^2 the shaft is held from end movement by a truck g^2 on a second shogging lever F^2 running upon a face f^2 on a second counter cam E^2 which is fixed upon the shaft J. When the truck g^2 is on the face c^2 the shaft is held from end movement by the base of the cam A^2 coming into contact with a fixed part of the machine, or a collar upon the shaft may be brought against any convenient fixed part.

In order to move the truck d^2 from one face of the cam A^2 to either of the other faces, the shaft B^2 is rocked in its bearings, and for this purpose it has fixed upon it two levers G^2 & H^2 which are acted upon by cams J^2 & K^2 respectively these being carried on a shaft L^2 and rotated by ratchet wheels M^2 & N^2 from pauls carried by any convenient moving part of the machine. The cam J^2 consists of two plates k^2 & f^2 each having two projections l^2 upon them, the plates being so connected that the projections on them may be brought and act as two projections or as a plate with four projections, the relative position being varied as required. The cam J^2 is used when fashioning with the narrow points only is required, its projections l^2 being such that when they act upon the lever G^2 the shaft B^2 is rocked to bring the truck d^2 onto the face b^2. The cam K^2 likewise consists of two plates l^2 & m^2, the former having projections n^2 upon it and the latter smaller projections o^2, while the two plates are arranged so that the projections o^2 can be brought in a line with the projections n^2 and being the smaller are thereby rendered inoperative; when the plates l^2 & m^2 are in this position the projections n^2 act upon the lever H^2 thereby rocking the shaft B^2 so that the truck d^2 is moved on to the face c^2, this taking place when fashioning with the wide points is required, but when fashionings with both sets of points are required then the plates l^2 & m^2 are moved until they form a cam with four projections which act alternately on the lever H^2 & move the truck d^2 from the face a^2 to the face b^2 and then from the face a^2 to the face c^2 these movements taking place alternately. Each set of cams are worked independently of the other, the set J^2 revolving on the shaft and the set K^2 with it, while the clawkers used for actuating the ratchet wheels M^2 & N^2 can be thrown out of action as required. There is also a suitable brake applied to each set of cams to prevent over-running and each set is provided with several ratchet wheels so that the number of courses between each fashioning may be regulated.

There is also another lever O^2 on the shaft B^2 carrying a truck s^2 running upon one of the three cams P^2 P^2 or P^2 and it is used to prevent the lever C^2 moving from one face to another with a jerk, the cams P^2 P^2 & P^2 being level at one point in the same line as the other cams, so that the shaft may be shogged endways.

In the foregoing description of parts and the mechanism for actuating the same, I have described the means employed for moving the parts in one direction, the return-motion being obtained by springs, or weights, or the weight of the parts themselves as is usual in this class of machinery.

Having now described the various parts and their separate movements, I will now describe the action of the machine when at work. A piece of fabric is first run on the needles, and a number of courses of plain knitting worked; I will then suppose that narrowing on the selvages are required, I therefore throw into action a paul to actuate the ratchet wheels M^2, the particular wheel depending upon the number of courses between each narrowing, this wheel then turns the cam J^2 which may be adjusted to give two narrowings for each revolution of the same, or four narrowings for each revolution.

The cam J^2 acting to raise the truck d^2 until it rides upon the face b^2 and thus shog the shaft J, bringing into action the cam H which operates the lever G^1 and turns the screw A through the paul g and ratchet wheel d, the cam K being turned

687

827

so that this paul shall fall into gear, as shown in Fig. 1. If widenings are required the cam K is turned so that the paul *f* comes into gear with the ratchet wheel *e*: the filling-up points are also connected to their operating cam and come into action, the remaining parts of the mechanism for widening being the same as those described for narrowing. I will then suppose that the requisite fashionings on the selvage only, have been completed, the paul turning the ratchet wheels M^2 is then thrown out of action and plain knitting may be produced, and I will now suppose that fashionings are required at some distance from the selvage, I therefore throw into action a paul for turning one of the ratchet wheels N^2, and the cam K^2 the plates of which are set so that the projections on the plate n^2 are behind those on the plate l^2 and as these come round they act upon the lever H^2 and move the truck d^2 on to the face c^2 and thus shog the cam shaft J, bringing into action the cams H, W, Y & D^1 then if the cam K is turned to throw the pauls *f* & *g*, R & S out of action the pauls T & U turn the screw L first in one direction and then in the other, thus moving the wide sets of points in and out alternately.

Then if the cam K is turned so as to throw the paul R into action it moves the wide points inwards and the cam Y acts to move the screw L so that the wide points are either carried further in or they are returned; suppose the paul R moves the screw L so that the wide points are carried in one needle and a narrowing made, the paul U then acts and moves the wide points inwards for a distance of several needles, at the same time as they are being lowered; they then take the loops partially rise and the paul R then moves them in one or more needles and the loops are replaced upon the needles; at the next narrowing the paul T acts and moves the wide points out as many needles as the paul U had previously moved them in, they receive the loops and are then moved one more needle in by the paul R: these motions being repeated cause two rows of narrowings to be made.

When widening with these points the filling up points are brought into action, and the cam K turned to throw out the paul R and in the paul S. The narrow points are also being brought inwards but do not make narrowings because the cam bringing down the points is not in action. When fashionings are required both at the selvage and at a distance from it, the plates l^2 & n^2 of the cam K^2 are turned so that the projections o^2 are brought from behind the projections n^2 and act alternately upon the lever H^2 moving the truck d^2 from the face a^2 to b^2 and back again, & then from the face a^2 to c^2 and back again, thus alternately throwing into and out of action the cam H and the cams H, W, Y & D^1 which act upon the various pauls in the manner already described.

Having now particularly described and ascertained the nature of my said invention, and in what manner the same is to be performed, I declare that what I claim is:—

1. The combination of two sets of fashioning mechanisms, arranged and capable of being operated substantially as shown and described.
2. The use of a third set of cams.
3. The construction and arrangement of the cams J^2 & K^2 and levers C^2, F^2, G^2 & H^2 for actuating the shaft B^2 and truck d^2 substantially as and for the purpose specified.
4. The general arrangement of the mechanism for shogging the cam shaft, substantially as shown and described in the accompanying drawings and Specification.

Dated this 24th day of December 1890.

J. A. CLARINGBURN.

London: Printed for Her Majesty's Stationery Office, by Darling & Son, Ltd.—1891.

A.D. 1890 March 31. No. 1967.
CLARINGBURN'S Complete Specification.

828

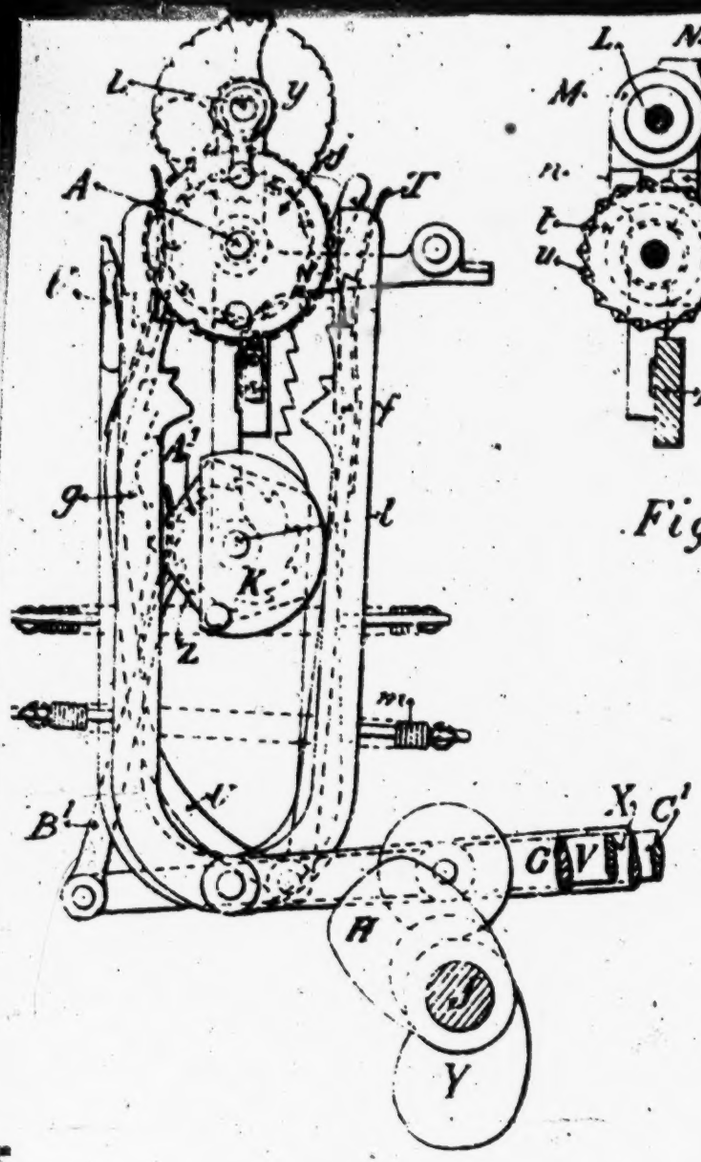

Fig. 1

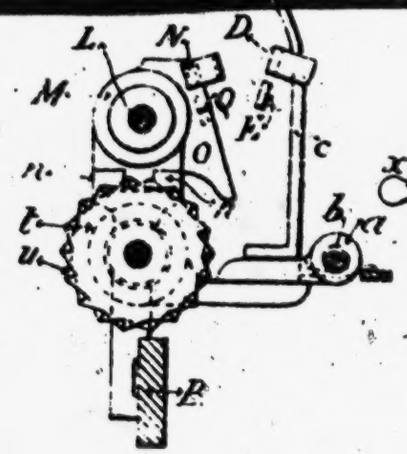

Fig. 3

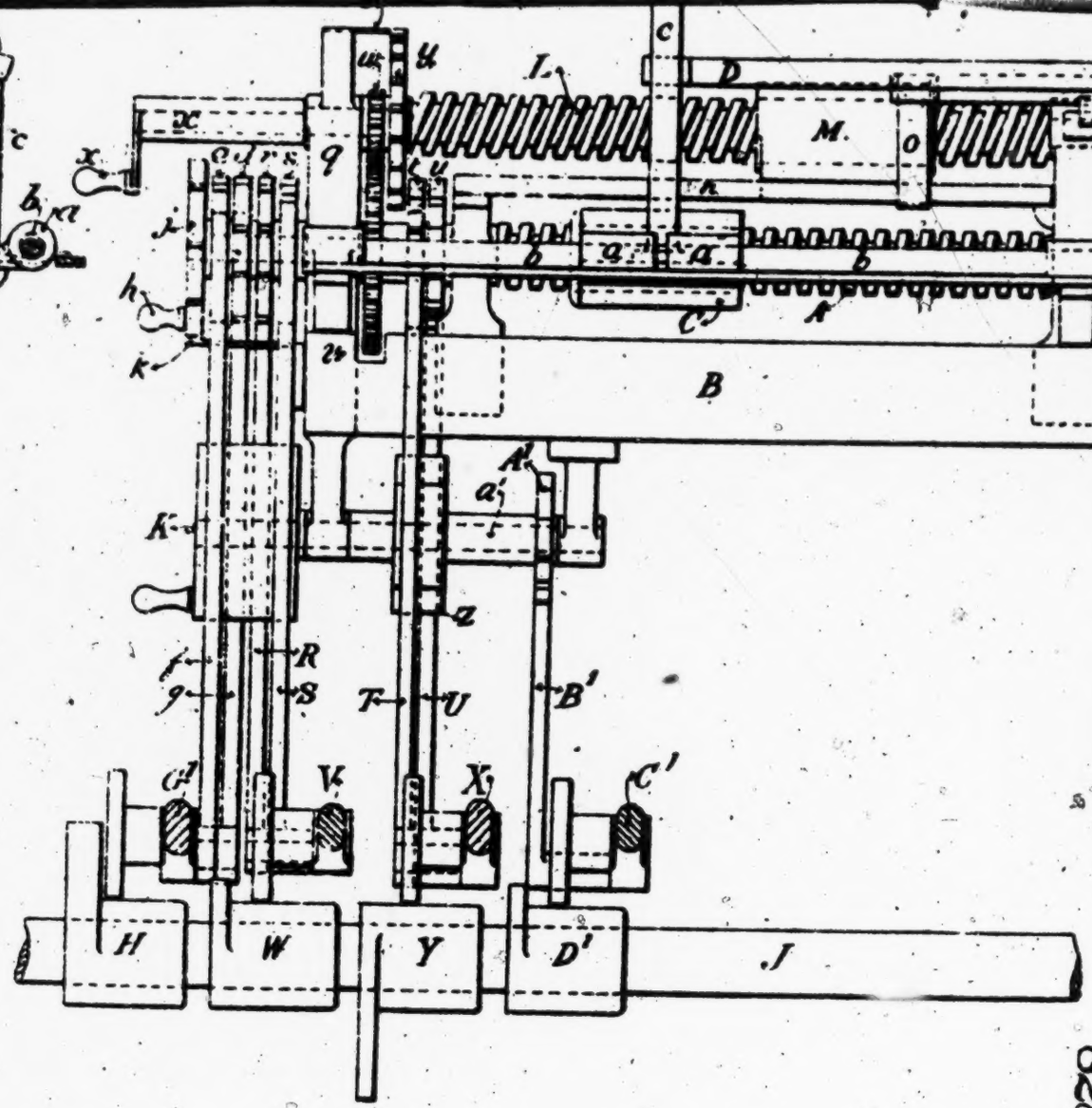

Fig. 2.

Page Tightly Bound

689

829

4967 a, 1890

SHEET 2

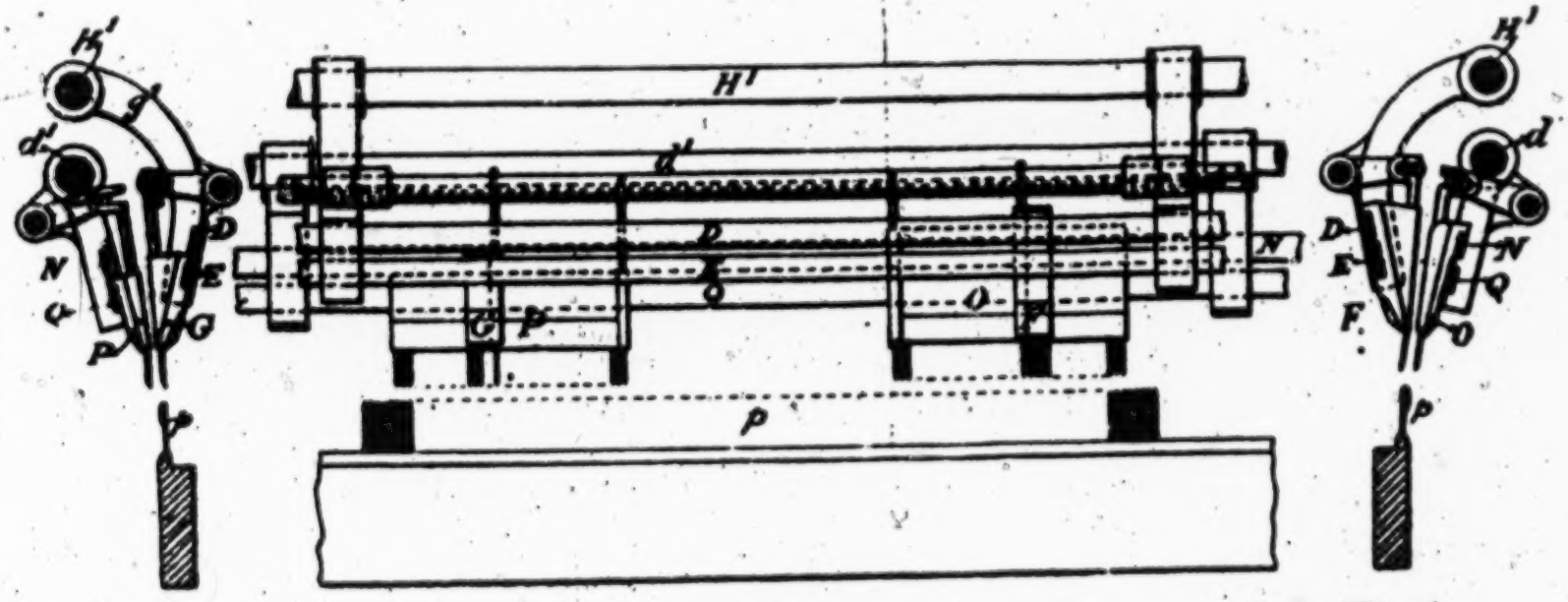

Fig. 5

Fig. 4

Fig. 6

Lowman, Printed by Lowman and Son Ld.
for Her Majesty's Stationery Office 1891.

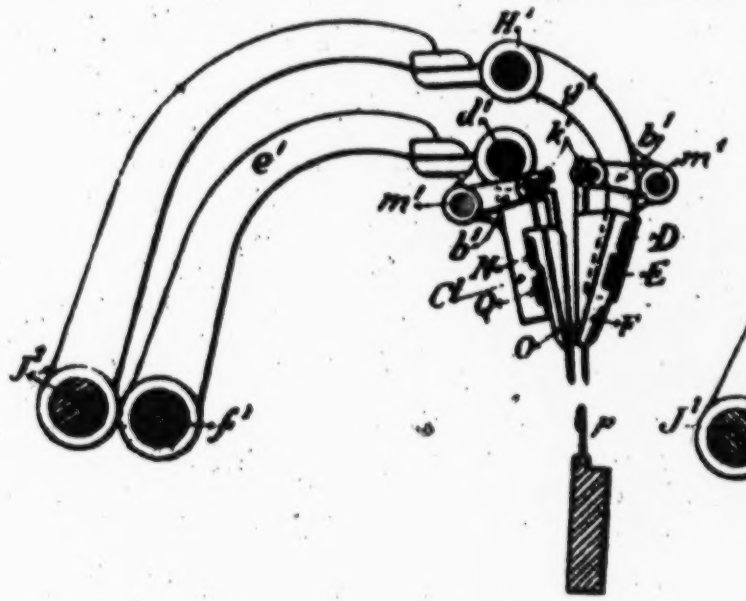

Fig. 7

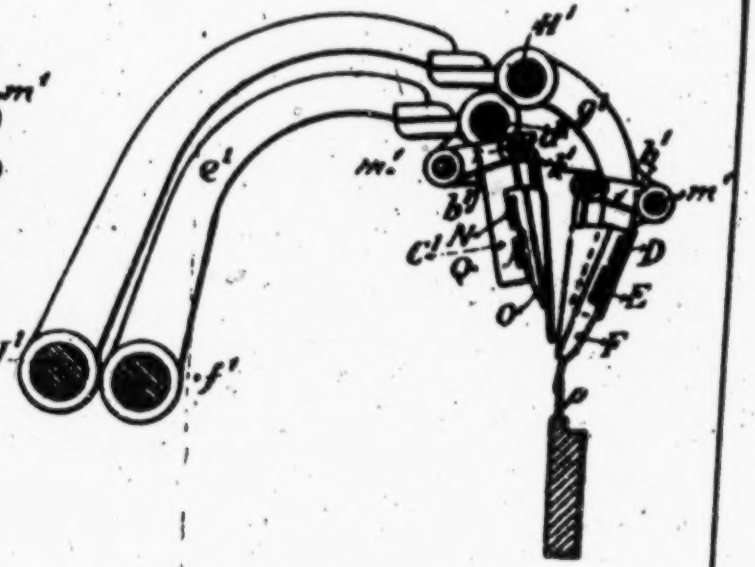

Fig. 8

691

831

A.D. 1890 March 31. No. 4967

CLARINGBURN'S Complete Specification.

SHEET 5

Fig. 12

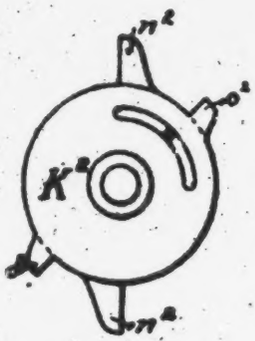

Fig. 11

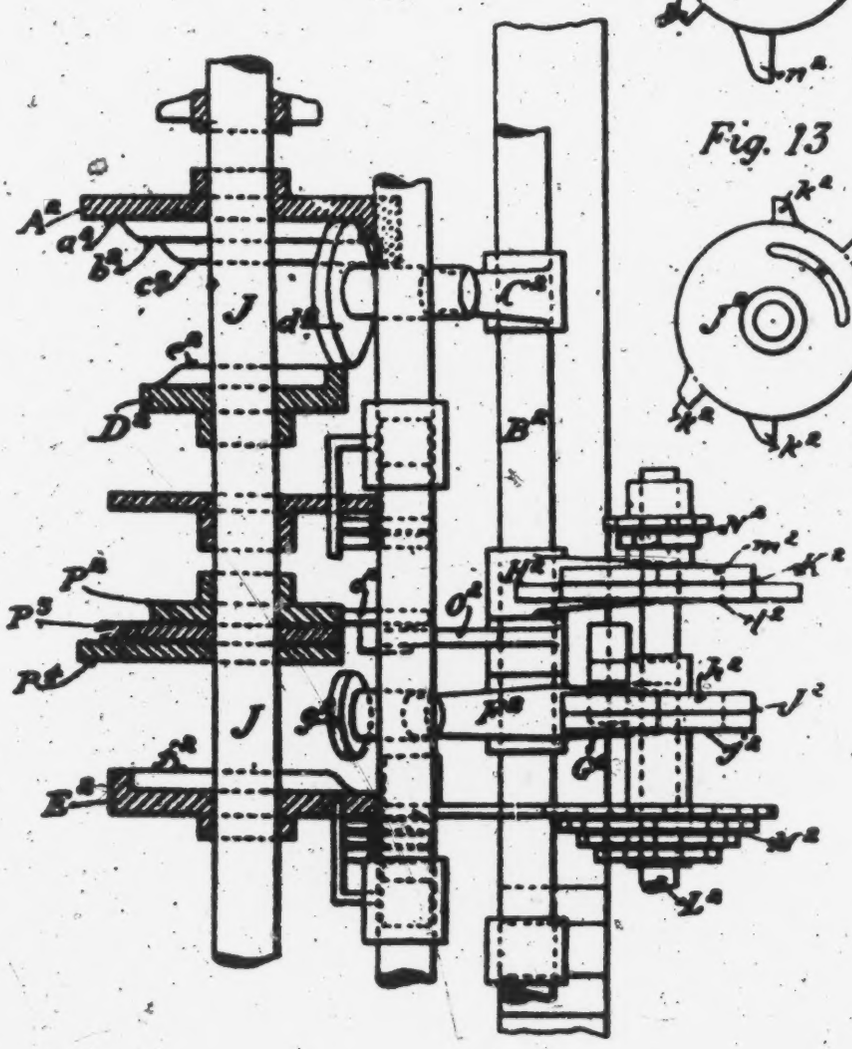

Fig. 13

London: Printed by [illegible] and Son Ld.
for Her Majesty's Stationery Office 1891.

692

832

4967 of 1890

15 SHEETS
SHEET 6

Fig. 9.

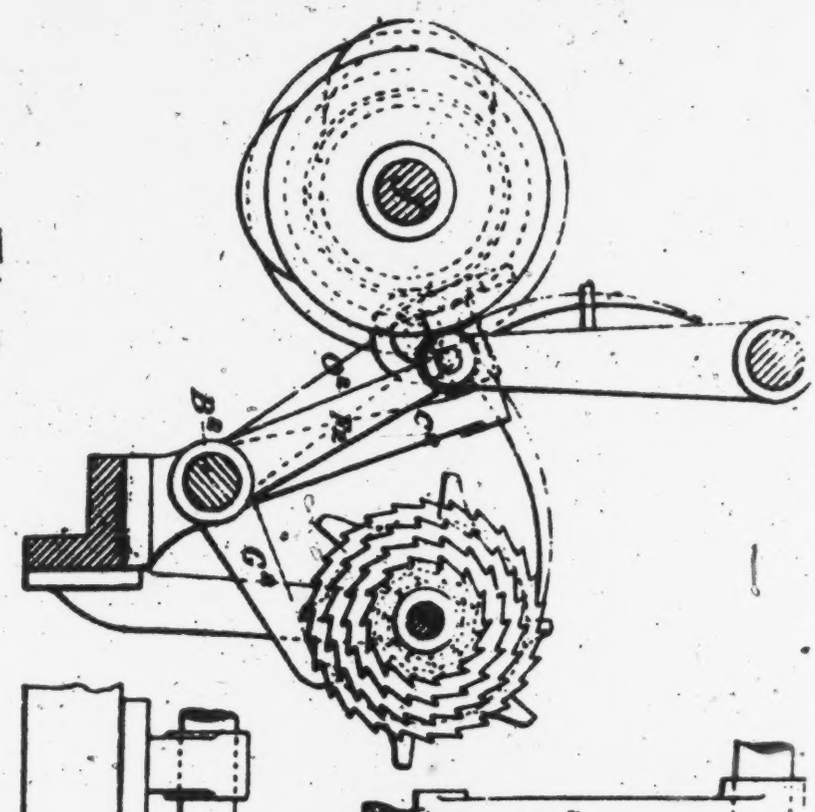

Fig. 10

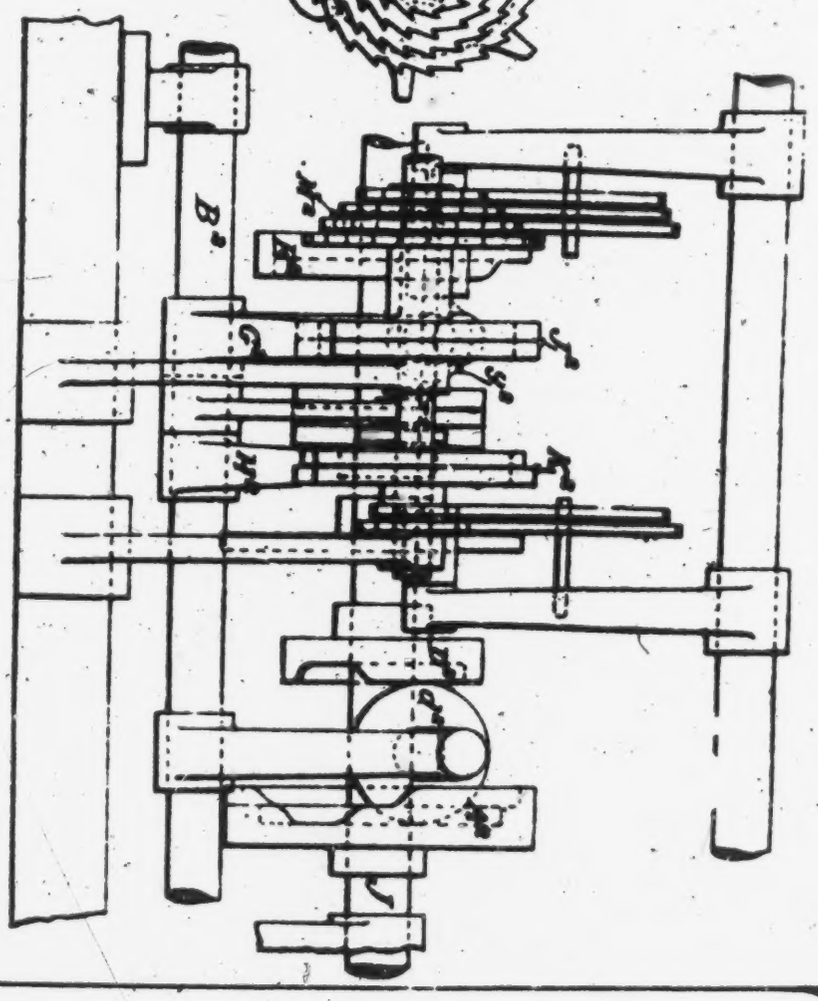

y/4

833
DEFENDANT'S EXHIBIT Z

LAMB & NOON

BRITISH PATENT No 15,129. SEPTEMBER 25,1889

(1)

Fig. 3a

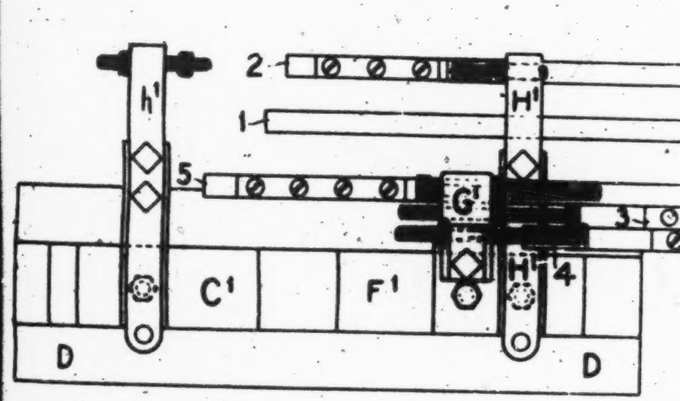

Fig. 3

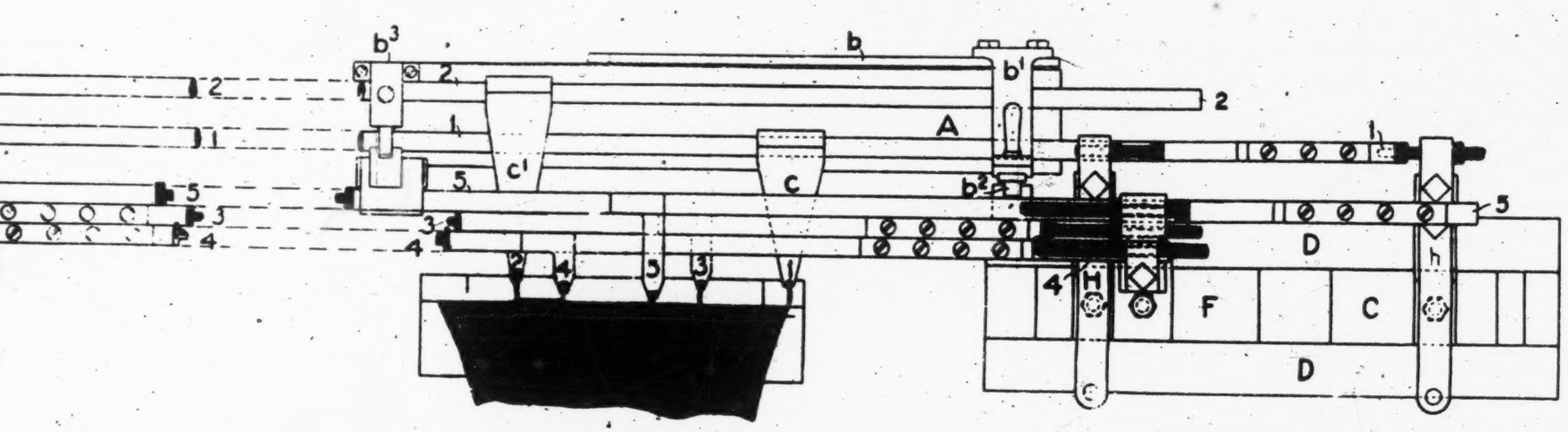

Dep. Ex. Z. Page 2. (2)

LAMB & NOON

BRITISH PATENT No 15,129, SEPTEMBER 25, 1889

Fig. 4

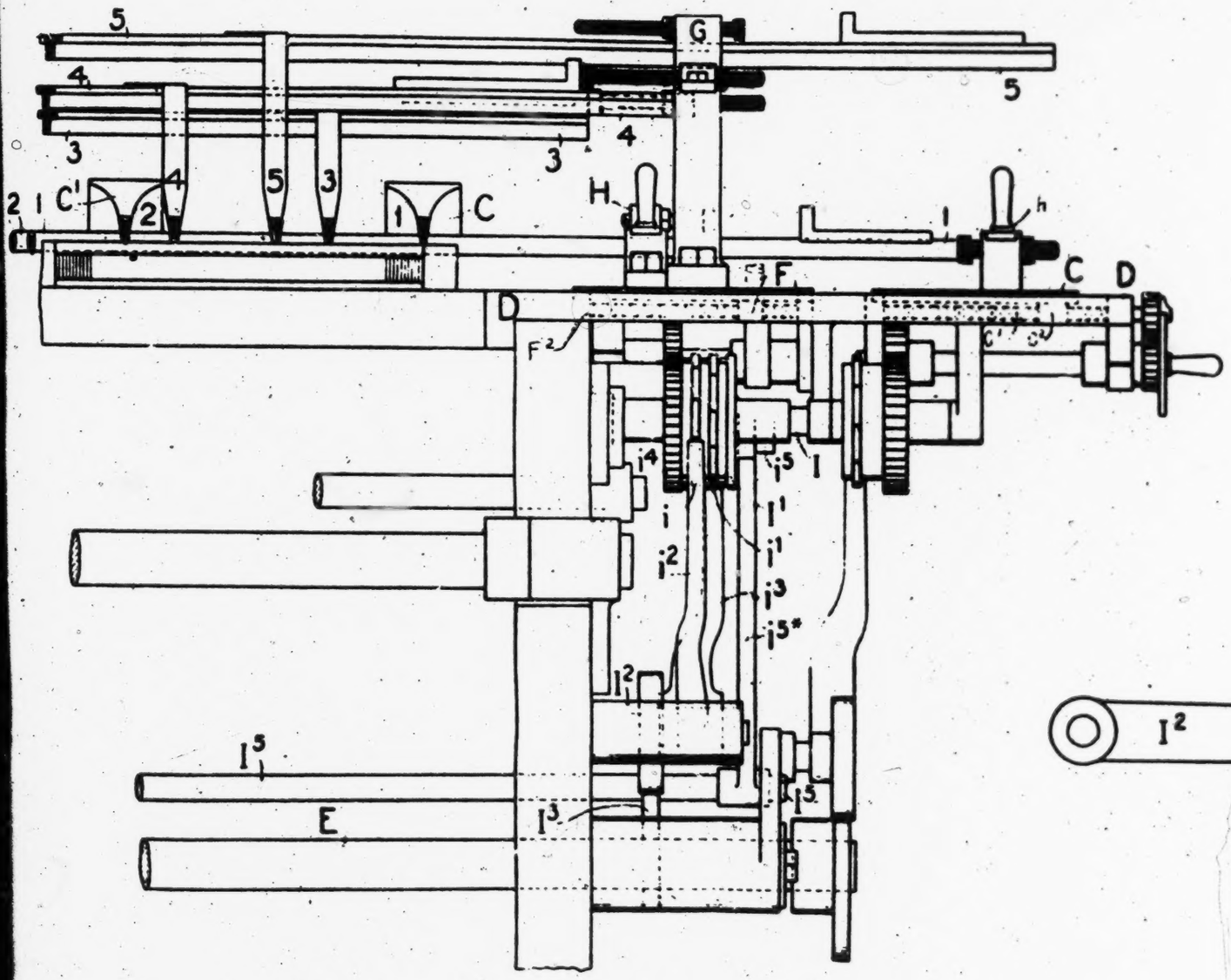

Fig. 5

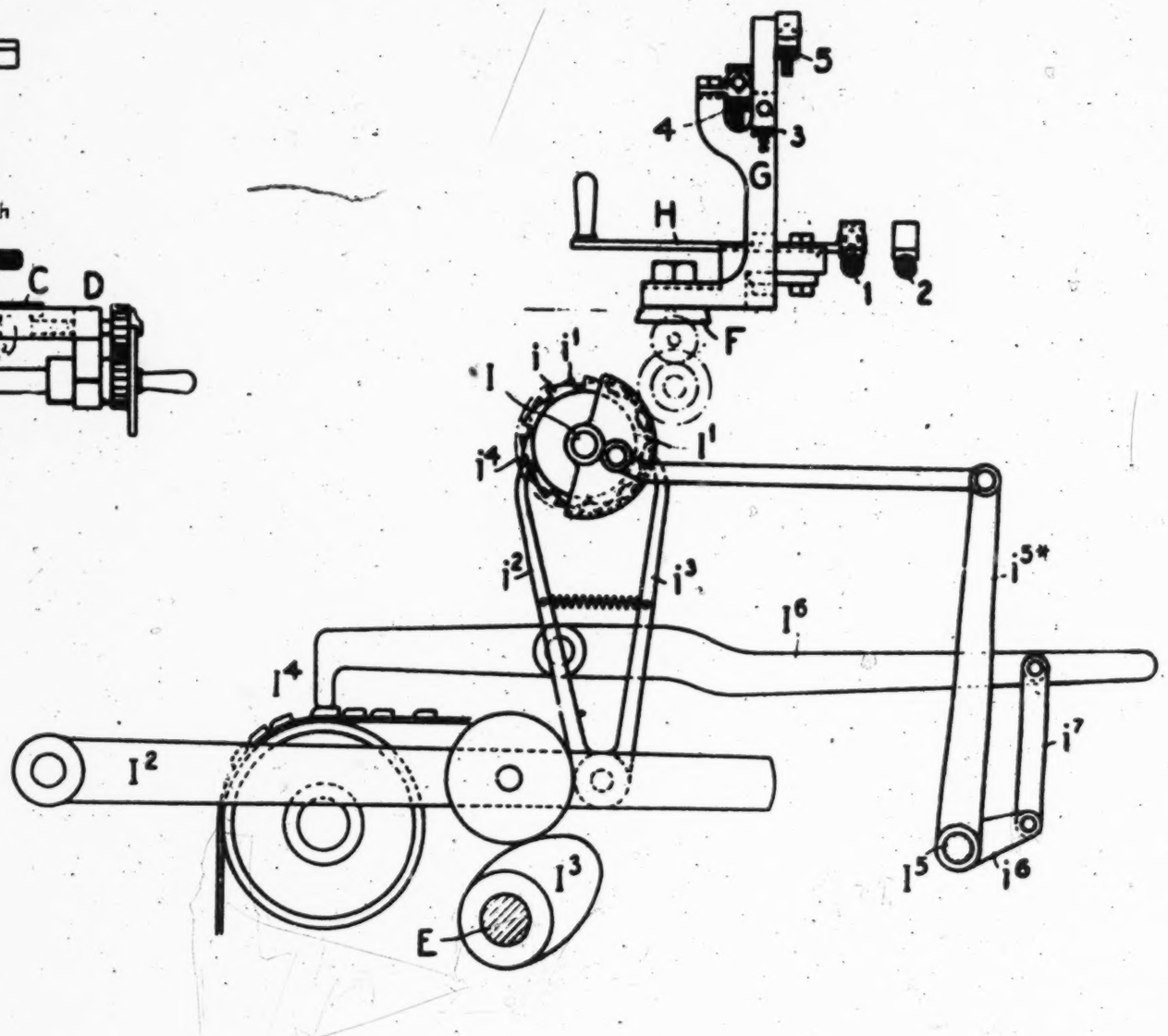

DEFENDANT'S EXHIBIT A1 835

N° 7068 A.D. 1891

Date of Application, 24th Apr., 1891
Complete Specification Left, 21st Jan., 1892—Accepted, 5th Mar., 1892

PROVISIONAL SPECIFICATION.

Improvements in Knitting Machines of the Straight Bar Type, and in the Method of Fashioning Fabrics thereon.

I, JOSEPH AUGUSTUS CLARINGBURN Hosiery Machinist, Liverpool Street, Nottingham, do hereby declare the nature of this invention to be as follows:—

The object of this invention is to enable machines to make fabrics such as ladies' vests with widenings on the two outside or two inside selvages of one or more pieces of work, as in making the gores in ladies' vests. By the method herein below explained, vests can be made and at the gores the four selvages forming the splits can be widened and narrowed so that afterwards they only require seaming to form a full bosomed gore.

For example, in making a lady's vest the plain part of the body is first made up to where the gores commence then the part of the vest between the gores is pressed off, the carrier being locked in the centre and the thread unbroken: the work is then continued on the two outside pieces which are widened on the inside as far as the centre of the gores and then narrowed again to the required width, these pieces are then pressed down on the needles and the piece between the breast pleates is put on the needles again and widened on both sides up as far as the centre of the gores, it is then narrowed to the required width, the outside pieces are then raised on the needles and the whole width of the vest proceeded with in the usual manner. It will readily be seen by the above description that splits will be made which only require seaming to complete the gores.

In order to accomplish the above it is necessary to be able to widen on either side of a piece of work with the screw at one end of a machine and also to have a filling-up point on either side of each narrowing brass one at a time being used, the one in use depending upon the direction in which the widening is being made; when narrowing both are out of action.

In order to carry out my invention I use three carriers, the first one of which is used for ordinary work and is actuated in the usual manner, the second one I use for laying the thread for the left-hand piece of the three pieces of work in making a lady's vest, and it is stopped for the outside selvage by a fixed stop on the bracket carrying the left-hand narrowing screw, while for stopping it for the inside selvage which requires widening, it passes through a lug on the left-hand screw-box and has a collar on the end of it which comes into contact with the lug. This left-hand screw-box also racks in or out the left-hand narrowing points, so that the narrowing points and thread-carrier are always at the same needle.

The third carrier-rod is used in exactly the same manner for the right-hand piece of work and the filling-up points are worked in the usual manner.

Dated this 23rd day of April 1891.

JOSEPH AUGUSTUS CLARINGBURN.

COMPLETE SPECIFICATION.

Improvements in Knitting Machines of the Straight Bar Type, and in the Method of Fashioning Fabrics thereon

JOSEPH AUGUSTUS CLARINGBURN Liverpool Street Nottingham Hosiery Machinist do hereby declare the nature of this invention and in what manner the same is to be performed, to be particularly described and ascertained in and by the following statement:—

My improvements relate to straight bar knitting machines of the Cotton's type

696

836

and are for the purpose of manufacturing what is known as vests with divided breast gores and similarly fashioned articles.

In the manufacture of a vest with divided gores the work is started at the lower end of the vest and is made in the usual way until the part for the gores is reached. At this point the fabric has to be divided into three pieces, the two outside pieces being made at one time and the centre piece either before or after the side pieces. The fashioning points used on this machine are fitted with a filling-up point on both sides of the ordinary points, so that work may be fashioned on the right and left sides by the same points.

In order that my invention and the method of making the vest may be understood, I have attached hereto one sheet of drawings upon which

Fig. 1 shows in plan the thread carriers and the stops for regulating their motion, also a portion of work during the manufacture of the side pieces of a vest.

Fig. 2 shows the work when the centre piece is being made and

Fig. 3 shows the divided gores complete before seaming while

Fig. 4 is an alternative method of making the screw box.

The lower end of the vest is made by the carrier *a* until the line *d e* Figs. 1 2 & 3 is reached when a few courses are knitted with the three carriers *a b* and *c* Fig. 1 in action, the traverse of the carriers being so arranged that the work is divided into three parts at the points *f* & *g*.

The arm *n* of the screw nut *o* is fitted with a slide n^1 carrying two stops *u* & *v*, and when starting the vest the carrier *a* is arrested by the shorter stop *v*. When the line *d e* is reached the points are racked in until their inside point is over the point *f* and the slide n^1 is moved to bring the stop *u* opposite the carrier *a*, and thus shorten its motion by a distance equal to the width of the points. The thread carriers always deliver the thread to the outside of the fashioning points, which at the start work with the outside left hand point on the line *d*. When the points are racked in to work on the edge *f k l* then the point which worked on the line *d* is some little distance from the same line & consequently the motion of the carrier *a* must be shortened by a distance equal to the distance between the line *f k l* and the point which had been working on the side *d*. After making a few courses on the three portions of the fabric, the centre portion is pressed off the needles, the carrier *a* locked in the centre of the machine, and the side pieces proceeded with.

For making work which is fashioned on the outside edges only the fashioning points are fitted with one filling-up point only, which works a few needles from the edges of the fabric, but for fashioning the work with the same points on the right and left hand edges, or as in this case on the edges *e* & *g h i* and the edges *d* and *f k l*, the fashioning points are fitted with two filling-up points. When working on the edge *e* the inside filling-up point is in action, and when on the edge *g h i* the outside point is in action, the terms inside and outside been here used in reference to the outside edges *d* and *e*.

The carrier *c* for making the left hand side piece is mounted on a rod *m* which passes through the arm *n* of the screw box *o* and its motion on the edge *d* is limited by an adjustable fixed stop *p*. The motion of the carrier *c* in the other direction that is towards the centre of the fabric is limited by a collar *q* on the rod *m*, this collar striking the arm *n* as the rod moves towards the centre of the fabric.

In the ordinary method of fashioning the fashioning points are moved inwards and the motion of the carriers decreased or the points are moved out and the motion of the carriers increased, the thread carriers always striking the inside of the stop *u*, but when making fashionings of the description shown the points travel towards the centre of the fabric from *f* to *k* and then back again along the line *k l*, and by regulating the motion of the carriers from the back or outside of the arm *n*, then as the points are moved in, the motion of the carrier is increased, and as the points are moved out the motion of the carrier is decreased.

The right hand side of the fabric is made simultaneously with the left hand

side, the thread being supplied by a carrier *b* which is mounted on a rod m^1 and its motion arrested by stops similarly arranged to those at the left hand side.

In Fig. 3 the fashioned breast gores are shown turned over on to the body of the fabric about the lines *f r* and *g s* and the same reference letters on the fabric in Figs. 1, 2 and 3 indicated the same points.

When the outside pieces have been made to the line *r s* Fig. 3, they are pressed down to the bottom of the needles and the centre piece at the line *f g* Fig. 2 run on to the needles. The carriers *b* and *c* are then locked out of action and the carrier *a* released. The fashioning points are then racked in so that the outside points can work on the edges *g* k^1 *s* and *f* k^1 *r* but this racking in of the fashioning points would also carry in the stops for the carrier *a* a distance equal to the width of the points, and to prevent this the cap n^1 is moved to bring the shorter stop *v* opposite the bar *t* and thus allow of the carrier *a* being brought to the edge of the fabric, the distance between the ends of the two stops being equal to the width of the fashioning points.

The centre piece is then made up to the same line *r s* as the side pieces, after which the upper part of the fabric is finished in the usual manner, and after being removed from the machine the left hand gore is seamed together at the edges *f k r* and *f* k^1 *r*, and the right hand gore at the edges *g* k^1 *s* and *g k s*.

When the machine is making the side pieces, the carrier rods strike the screw stops *s* and tend to move them towards the centre of the machine while the movement given to the fashioning points tend to move the screw box in the opposite direction and if through wear or other causes there was any play between the screw and the box it is evident that the motion of the carriers and fashioning points would not have the necessary accuracy. To overcome this difficulty I have shown in Fig. 4 a screw box made in two pieces A and B which are drawn together by springs C and D. The two parts of the nut are thus drawn up to opposite sides of the screw thread and prevent any movement of the nut upon the screw. The two parts of the nut may be fitted with regulating screws E and F to prevent the springs exerting undue pressure and consequently wear upon the screw or nut.

When the machine is required for making work of the ordinary description, that is, work which is fashioned on the outside edges only, the carriers *b* and *c* can be readily thrown out of action without loss of time, and the work made by the carrier *a*.

Having now described and ascertained the nature of my said invention and in what manner the same is to be performed I declare that what I claim is :—

1. The method of making on a straight bar knitting machine fashionings as described with a single fashioning screw at each end of the machine.

2. The application of a collar or its equivalent to the thread carrier rods for stopping their motion in the manner described as and for the purpose specified.

3. The construction of a fashioning screw box in two parts as shown and described for the particular purpose specified in connection with a collar or its equivalent on the carrier rod.

Dated this 20th day of January 1892.

W. H. POTTER,
Parliament Chambers, Nottingham, Agent for the Applicant.

838 A.D. 1891. April 24. Nº 7068.

CLARINGBURN'S Complete Specification. 1 SHEET

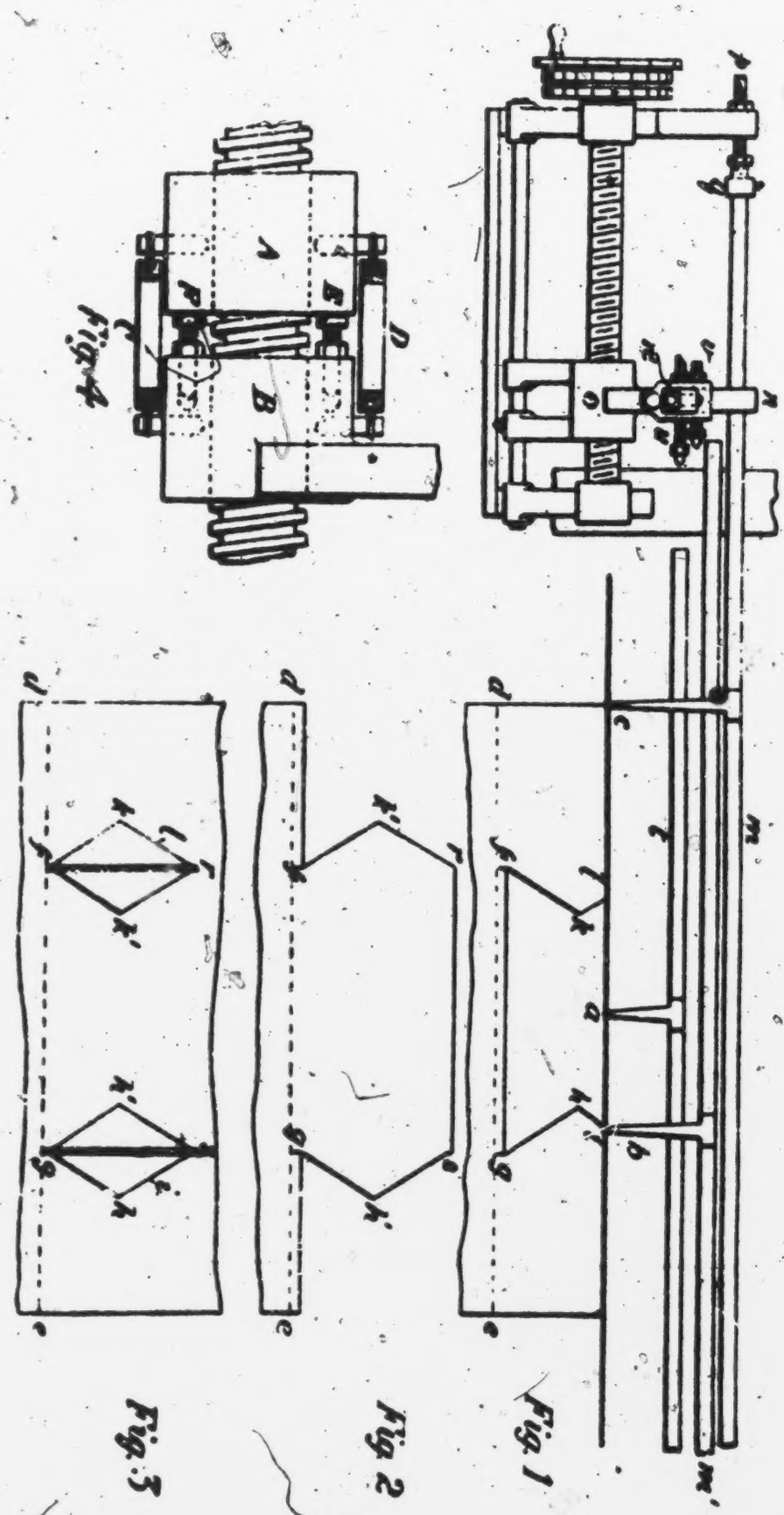

This Drawing is a reproduction of the Original on a reduced scale.

London: Printed by Harrison and Sons Ltd
for Her Majesty's Stationery Office. 1892

Malby & Sons Photo-Litho

DEFENDANT'S EXHIBIT B1 839

[redacted]

KAISERLICHES PATENTAMT.

AUSGEGEBEN DEN 1. FEBRUAR

PATENTSCHRIFT

№ 117153

KLASSE 25 a.

THEODOR LIEBERKNECHT IN HOHENSTEIN-ERNSTTHAL i. S.

Pufferanordnung für die Fadenführer- und Deckerschienen von flachen Wirkstühlen.

Patentirt im Deutschen Reiche vom 15. Mai 1900 ab.

In sehr breiten Wirkstühlen, welche viele Waarenstücke *w* (Fig. 1) von gleicher Art neben einander arbeiten, werden manche Theile, z. B. die Fadenführerschienen *b* (Fig. 1 und 5), oder die Deckerschienen *d* (Fig. 5) sehr lang. Nun bildet das Maschinengestell, welches die Nadelreihen *e* (Fig. 1) in einzelnen Abtheilungen (Fonturen) trägt, einen langen und sehr starken Körper von grofser Masse, und die Schienen *b d* sind ebenso lang, aber dünn und von kleiner Masse. Bei Aenderung der Temperatur, z. B. wenn im Winter früh die kalten Arbeitsräume angeheizt werden, durchwärmen die dünnen Schienen *b d* viel schneller als das massige Gestell, sie dehnen sich also auch zunächst mehr aus als das letztere und dann passen in den ersten Arbeitsstunden die Theile nicht richtig zusammen. Wenn z. B. die Schiene *b* (Fig. 1) links am Puffer *f* anliegt, so ist der erste Führer *c* bei 1 wohl noch richtig zwischen der Randnadel *e* (Fig. 3) der Waare und der nächsten äufseren Nadel e_1, beim nächsten Führer 2 ist aber *b* schon im Stücke *f* bis 2 etwas mehr ausgedehnt als das Gestell und der Führer steht wie 2 in Fig. 3 etwas näher an *e*, der dritte Führer 3 rückt noch dichter an *e* und schliefslich kommen weitere Führer bis auf oder über die Randnadeln *e* der Waaren, wodurch natürlich Fehler entstehen: die Randmaschen sind unregelmäfsig oder fehlen. Die Erfahrung zeigt, dafs bei 12 bis 16 Strümpfen und feiner Theilung der Unterschied in der Ausdehnung schon recht leicht eine halbe Nadeltheilung betragen kann, wodurch der Stuhl so lange unbrauchbar wird, bis die Theile alle gleichmäfsig erwärmt sind. Die Decker zeigen denselben Fehler, denn die Decknadeln *g* (Fig. 4) treffen nach und nach mit ihren Spitzen nicht in die Mitte der Stuhlnadelrinne, wie 1, sondern zur Seite auf den Rand, wie 2, 3 u. s. w., wobei sie noch immer richtig arbeiten, bis sie endlich über den Rand und über die Nadel *e* hinausfallen, womit der Stuhl ebenfalls unbrauchbar wird.

Das nächste Mittel zur Abhülfe würde nun sein, die Schienen *b d* zu theilen und für jeden Theil besondere Mitnehmer und Puffer anzubringen, aber das ist umständlich und theuer. Die vorliegende Neuerung besteht deshalb darin, dafs die Puffer *f* f_1 nicht an den beiden Enden der Maschinen, sondern in der Mitte der letzteren, oder, wenn nicht gerade die Mittellinie gewählt wird, so doch jedenfalls innerhalb der Fonturen angeordnet werden, wie Fig. 2 zeigt. Stöfst hier die Schiene *b* mit *i* an *f*, so ist zunächst der erste Führer 1 links von *i* noch in richtiger Stellung, die nächsten Führer 2 links und rechts von *i* rücken näher, theils an die Aufsennadel e_1 (Fig. 3), theils an die Randnadel *e*, die nächsten 3 noch näher u. s. f. Aber diese Annäherung setzt sich nur bis zur Hälfte der Anzahl Führer fort, der Fehler wird also höchstens halb so grofs wie bisher, und dieser ist unschädlich; denn die Führer bleiben noch zwischen den Nadeln *e* e_1 (Fig. 3) und die Decknadeln bleiben innerhalb der Nadel-

117153

rinne Fig. 4. Man kann also mit dieser neuen Anordnung den Stuhl doppelt so breit bauen als bisher.

In Fig. 5 ist die Einrichtung an einem Cottonstuhle angedeutet, derart, dafs die Pufferstücke *f* für die Fadenführerschienen *b* nahezu in derselben Höhenlage wie bisher liegen, diejenigen für die Deckerschienen *d* aber oben bei *h* angebracht sind, beides inmitten der Maschinenbreite, wie in Fig. 2 $f f_1$. Damit stören die Puffer die Fonturen *c* nicht, und da sie an beiden Seiten in Wegfall kommen, so wird der Stuhl schmäler oder man kann an ihm bei gleicher Breite nun mehr Fonturen anbringen, mehr Waarenstücke *w* arbeiten als bisher.

Es gäbe wohl auch den anderen Weg, dafs man inmitten der Maschine eine Fontur oder zwei wegnähme und den freien Platz für die Puffer benutzte; damit wird aber die Arbeit vermindert infolge des Verlustes zweier Fonturen, und es soll das hier nur erwähnt werden, um ein Umgehen der Erfindung zu verhindern.

Patent-Anspruch:

Pufferanordnung für die Fadenführer- und Deckerschienen von flachen Wirkstühlen, dadurch gekennzeichnet, dafs die Puffer nicht an den Seiten, sondern in der Mitte des Stuhles bezw. innerhalb der Fonturen liegen, die genannten Schienen sich also seitlich von den Anstofsstellen erstrecken und somit ihre Ausdehnungsverschiedenheit gegen die ganze Stuhlbreite geringer als bisher und damit unschädlich gemacht wird.

117153

Hierzu 1 Blatt Zeichnungen.

[fol. 841] DEFENDANT'S EXHIBIT B-1

German Patent # 117153, Class 25 a

Theodor Lieberknecht in Hohenstein—Ernstthat, Saxony,

Stop Arrangement for the Carrier and Narrowing Rods of Flat Knitting Machines

Patented in the German Empire May 15, 1900

In the very wide knitting machines working many pieces of fabric at one and the same time, w (fig. 1), certain parts, for example the thread carrier rods b, (fig. 1 and 5), or the narrowing rods d, (fig. 5), are very long. The frame, holding the rows of needles e (fig. 1) in individual sections, forms a long and very rigid body of great strength, and the rods b, d, are just as long but thin and of less strength. When the temperature changes, as for example during the winter early in the morning, while the rooms are being heated, the thin rods b, d, are warmed up more quickly as the massive frame and they, therefore, expand more readily than the latter and then during the first working hours, the various parts do not fit together properly. If, for example, rod b, (fig. 1) rests left at the stop f, the first carrier c, at position 1, is still in the correct place between the selvedge needle e, (fig. 3) of the fabric and the next needle, e_1; in the case of the next carrier 2, however, b in f to 2, has already expanded more than the frame, and the carrier is in the position 2 as shown in fig. 3 somewhat nearer to e; the [fol. 842] third carrier moves still closer to e, and finally other carriers expand on top or beyond the selvedge needles e of the fabric, whereby, of course, seconds in the fabric occur; the selvedge loops are irregular or are missing entirely. Experience has shown that in the case of 12 to 16 sections and fine gauge, the variation in the expansion can easily be half of the space between the needles, whereby the machine becomes inoperative until all parts have been warmed up uniformly. The narrowing fingers show the same tendency, for the narrowing needles g, (fig. 4), by and by with their points do not position themselves in the middle of the knitting needle groove, as 1, but sideways of it on the edge, as 2, 3, etc., whereby they are still working correctly, until finally they expand over the edge and over the needle e, in which case the machine has again become inoperative.

The next best means of eliminating this condition would be to divide the rods b, d, and to create for each part special dogs and stops. However, this is troublesome and expensive. The present invention, therefore, consists in that the stops f, f_1, are not on both ends of the machine, but in the middle thereof, or, if not exactly the centre is chosen, at any rate in between the sections as is shown in fig. 2. If in this manner rod b with i comes in contact with f, the first carrier 1, left of i, is still in the correct position; the next carrier 2, left and right of i, move closer, partly to needle e_1, (fig. 3), and partly to selvedge needle e; the next 3 still closer, etc., but the approach extends only over half of the number of carriers so that the incorrect adjustment is only half as great as heretofore, and this is without bad effect, for the [fol. 843] carriers still remain between the needles ee_1, (fig. 3), and the narrowing needles still remain within the needle groove (fig.). In other words, with this new arrangement it is possible to build the machine twice as long as heretofore.

In figure 5 is shown the attachment on a flat knitting machine in such a manner that the stops f for the thread carrier rods b, are arranged at nearly the same height as heretofore; those of the narrowing rods d, however, attached on top at h, both in the centre of the machine as in fig. 2 ff_1. In this manner the stops do not interfere in any way with the sections e, and as they are not mounted at the ends, the machine becomes shorter, or it is possible in the same width to build in more sections so that more pieces of fabric w can be made as heretofore.

There would also be the other way, by leaving out in the centre of the machine one or more sections and to use the section space for the stops. In that way, however, the amount of production becomes smaller because of the loss of production of two sections, and this is mentioned here only to avoid a circumvention of the invention.

Patent-Claims

Stop arrangement for the thread carrier and narrowing rods of flat knitting machines, typical in that the stops are not placed at the sides but in the centre of the machine in between the sections so that the named rods extend themselves sideways of the stops and whereby the possibility of expansion over the entire machine becomes less than heretofore and also becomes without effect upon the satisfactory operation of the machine.

703

844

THEODOR LIEBERKNECHT IN HOHENSTEIN-ERNSTTHAL i. S.

Pufferanordnung für die Fadenführer- und Deckerschienen von flachen Wirkstühlen.

Fig. 1.

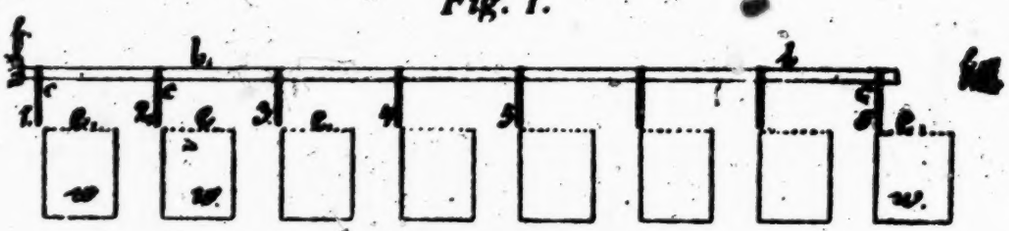

Fig. 2.

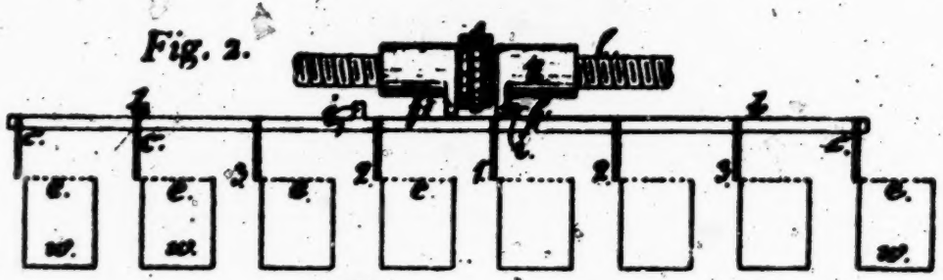

Fig. 3.

Fig. 4.

Fig. 5.

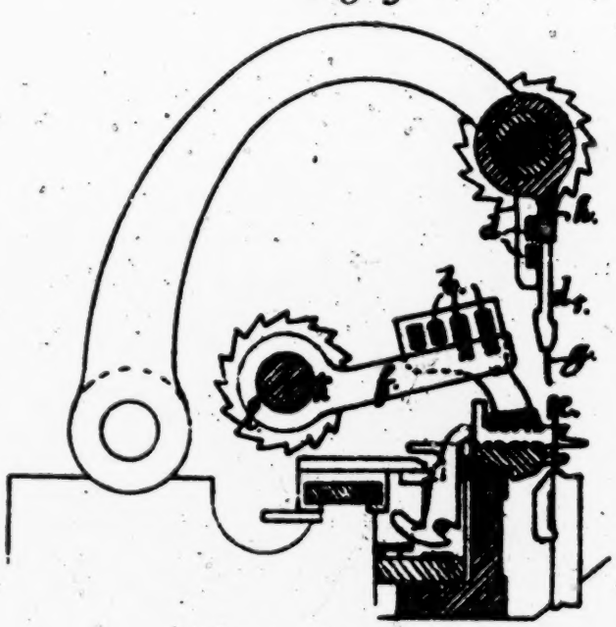

Zu der Patentschrift

№ 117153.

PHOTOGR. DRUCK DER REICHSDRUCKEREI

6½

704

845

DEFENDANT'S EXHIBIT C1

PATENT SPECIFICATION

Application Date: Dec. 2, 1922. No. 32,962/22.

Complete Left: Aug. 31, 1923.

Complete Accepted: Dec. 20, 1923.

208,362

LIBRARY
FEB 4 - 1924
U. S. PATENT OFFICE

PROVISIONAL SPECIFICATION.

Improvements in Rotary or Straight-bar Knitting Machines.

We, WILLIAM COTTON, LIMITED, of Pinfold Gate, Loughborough, Hosiery Machinists, a company organized under the laws of Great Britain, and CHARLES HENRY ALDRIDGE, Managing Director, British subject, of the same address, do hereby declare the nature of this invention to be as follows:—

This invention relates to improvements in connexion with rotary or straight-bar knitting machines, and is particularly adapted to the type known as "Cotton's patents", but is also applicable to other types of straight-bar knitting machines.

The improved mechanism hereinafter described has particular reference to such arrangements as are applied to a "Cotton's patent" or similar knitting machine for "splicing" or knitting in an extra thread to strengthen certain parts of hosiery or underwear, as well understood by all conversant with knitting machinery, and it is more particularly designed for effecting improvements when (what is known as) "high splicing" in hose or the like is being made, and where the top of the splicing is graduated so as to rise to a point or inverted V shape at the back of the leg and this is pretty generally known as "graduated splicing"

In order to produce the graduations desired the ordinary well understood splicing carrier rods are stopped (by the usual selvedge or sliding stops) at the selvedges, and by certain arrangements of variable stops, whereby the splicing carriers needles starting their thread from the selvedges (as when making hose) gradually increase the length of draw or traverse of carriers at certain successive stages until they reach the full width of splicing desired.

The mechanism now to be described consists of improved variable stops and associated parts automatically controlling the varying length of traverse of the splicing carriers as desired.

We arrange a fixed bed or bar at a convenient position on the machine, preferably in one of the end divisions. Upon this bed two nuts or screw boxes are fitted and free to slide. A right and left hand screw passes through these nuts and is carried by suitable bearings attached to the said bed, so that by rotating the said screw the two nuts or boxes approach or recede from one another.

Each nut is provided with an adjustable stop (bolt or finger) which (when in action) lies in the path of a bracket or equivalent attached to each of the splicing carrier rods or other convenient connected part or parts. The stop on one nut acts upon one splicing carrier rod and the stop on the other nut likewise acts upon the second splicing carrier rod, all being so set and adjusted that when the splicing is started the said stops are in such a position as to stop the traverse of the splicing carriers practically at the selvedges or other desired starting points, and as the said screw is rotated the stops are shifted a distance of one of more needle spaces as desired and the traverse of the splicing carriers is thereby increased as and when the screw is turned.

The said screw is turned by means of a rack wheel and ratchet or equivalent to which action is imparted as and when required by a cam on the cam shaft.

In this class of splicing it is generally found desirable that the traverse of the splicing carriers should be increased an amount equal to one needle space or a two needle space at each increase of traverse as desired. To do this we form the teeth of the ratchet as a separate part and fasten this part to the ratchet arm in such a manner that it is adjustable thereon, so that when the

said part is in one position the screw is racked for a one needle space, and when in another position the screw is racked for a two needle space, or other space or spaces as desired.

It will be noticed that there might be danger of the nuts jamming if the ratchet were not stopped at the right time.

To avoid this we arrange a knocking-out-lever which is held out of action by a prop or equivalent, which in turn is connected to one of the nuts by an adjustable connecting rod in such a manner that at any desired position in the traverse of the nuts, the said prop is withdrawn and the ratchet is automatically knocked out of action.

Dated the 2nd day of December, 1922.

CARPMAELS, RANSFORD & NEWTON,
Agents for Applicants,
24, Southampton Buildings, London, W.C. 2.

COMPLETE SPECIFICATION.

Improvements in Rotary or Straight-bar Knitting Machines.

We, WILLIAM COTTON, LIMITED, of Pinfold Gate, Loughborough, Hosiery Machinists, a company organised under the laws of Great Britain, and CHARLES HENRY ALDRIDGE, Managing Director, British subject, of the same address, do hereby declare the nature of this invention and in what manner the same is to be performed, to be particularly described and ascertained in and by the following statement:—

This invention relates to improvements in connexion with rotary or straight-bar knitting machines, and is particularly adapted to the type known as "Cotton's patents", but is also applicable to other types of straight-bar knitting machines.

The improved mechanism hereinafter described has particular reference to such arrangements as are applied to a "Cotton's patent" or similar knitting machine for "splicing" or knitting in an extra thread to strengthen certain parts of hosiery or underwear, as well understood by all conversant with knitting machinery, and it is more particularly designed for effecting improvements when (what is known as) "high splicing" in hose or the like is being made, and where the top of the splicing is graduated so as to rise to a point or inverted V shape at the back of the leg and this is pretty generally known as "graduated splicing".

In order to produce the graduations desired the ordinary well understood splicing carrier rods are stopped (by the usual selvedge or sliding stops) at the selvedges, and by certain arrangements of variable stops, whereby the splicing carrier needles starting their thread from the selvedges (as when making hose) gradually increase the length of draw or traverse of carriers at certain successive stages until they reach the full width of splicing desired.

The mechanism now to be described consists of improved variable stops and associated parts automatically controlling the varying length of traverse of the splicing carriers as desired.

We arrange a fixed bed or bar at a convenient position on the machine, preferably in one of the end divisions. Upon this bed two nuts or screw boxes are fitted and free to slide. A right and left hand screw passes through these nuts and is carried by suitable bearings attached to the said bed, so that by rotating the said screw the two nuts or boxes approach or recede from one another.

Each nut is provided with an adjustable stop (bolt or finger) which (when in action) lies in the path of a bracket or equivalent attached to each of the splicing carrier rods or other convenient connected part or parts. The stop on one nut acts upon one splicing carrier rod and the stop on the other nut likewise acts upon the second splicing carrier rod, all being so set and adjusted that when the splicing is started the said stops are in such a position as to stop the traverse of the splicing carriers, practically at the selvedges or other desired starting points, and as the said screw is rotated the stops are shifted a distance of one or more needle spaces as desired and the traverse of the splicing carriers is thereby increased as and when the screw is turned.

This invention is illustrated by the accompanying drawing which shows the arrangements herein described together with some adjacent parts; other parts not shown are well understood by all conversant with full fashioned knitting machinery.

Fig. 1 is a front view of the special appliances, together with a pair of splicing carrier needles as ordinarily applied to a single division of a

"Cotton's patent" hose frame. Fig. 2 is a part section of same, and Fig. 3 is an end view of parts of same, showing the racking mechanism.

In Fig. 2 a needle A and a sinker A^1 are shown, together with the head A^2 and the slur bar B in order to localise the adjacent parts.

C^1 C^2 are splicing carriers, which are fast to the splicing carrier rods C^3, C^4 which slide in the usual well understood manner in suitable bearings, are driven by any usual well understood friction mechanism, the length of the traverse being controlled by the usual stop arrangement. The sliding stops control and stop the carriers at their respective selvedges, and the stationary stops at any width from the selvedges as required, according to the width of a splicing (generally known as high splicing) desired. All this is well understood by all conversant with full fashioned hosiery machinery.

This form of splicing has generally been made, as in the case of a hose for instance, so that the ankle splicing starts with a straight line round the back of the leg, but in some cases the top of the splicing is graduated so as to rise to a point, or inverted V shape at the back of the leg.

The invention herein described relates to special mechanisms controlling special supplementary stops (which are used in addition to the usual sliding stops and stationary stops above referred to) for effecting the graduation of traverse of the splicing carriers desired.

D is a fixed bed or bar, carried by brackets D^1 by any convenient part of the framing of the machine. D^2, D^3 are two screw boxes or nuts, free to slide thereon. D^4 is a right and left hand screw, passing through the nuts D^2, D^3 and carried by suitable bearings fast to the bed D, and it will be seen that by rotating the said screw D^4 the two nuts approach, or recede, one from the other according to the direction of rotation of the screw D^4. Each nut is provided with a suitable stop finger, or equivalent, D^5, D^6 which may be pivoted as shown D^5 on D^2 and D^6 on D^3. The carrier rod C^3 is provided with a suitable stop C^5 fast thereto, and the carrier rod C^4 with a similar stop C^6, with which the said stop fingers D^5 D^6 may engage when in the positions shown in full lines or the fingers D^5 D^6 may be turned up out of action, (as shown in dotted lines in Figure 2) when not required. These stops are so arranged and adjusted that when the screw nuts D^2, D^3 are at their widest distance apart, and the fingers D^5 D^6 are down the splicing carrier needles C, C^1, will remain at their respective selvedges, as shown in full lines in Fig. 1. It will now be seen that if the screw D^4 be suitably rotated at each course of work, the traverse of the splicing carriers C, C^1 will be increased at each draw and the width of the splicing will be gradually increased until the splicing carriers C, C^1 reach the positions indicated by dotted lines, as controlled by the ordinary splicing stops, or by automatically stopping the racking of the screw D^4, as hereinafter described, and the form of the splicing will be as indicated by the dotted area in Fig. 1, starting from the points C^8, C^9 and widening out to the full width of splicing C^8, C^9 and C^{10}, C^{11}.

The said screw is turned by means of a rack wheel and ratchet or equivalent to which action is imparted as and when required by a cam on the cam shaft.

In this class of splicing it is generally found desirable that the traverse of each of the splicing carriers should be increased an amount equal to one needle space or a two needle space at each increase of traverse as desired. To do this we form the teeth of the ratchet as a separate part and fasten this part to the ratchet arm in such a manner that it is adjustable thereon, so that when the said part is in one position the screw is racked for a one needle space, and when in another position the screw is racked for a two needle space, or other space or spaces as desired.

This will be understood by referring to the drawings. D^7 is a rack wheel fast to the screw D^4. This wheel is provided with pegs D^8, with which the teeth of the ratchet D^9 engage. This rack wheel is provided with a suitable retaining spring or equivalent, not shown but well understood. The part D^9 in which the ratchet teeth are formed is attached to the arm or member D^{10} which receives a suitable up and down movement by a truck lever and cam, not shown but well understood. The ratchet D^9 is held in contact with the pegs D^8 by a spring D^{11}.

The ratchet D^9 is attached to the arm D^{10} by a suitable screw or screws, passing through slots in the ratchet, the said slots being of such a length as to permit the ratchet being raised or lowered on the arm D^{10}, a distance equal to the pitch of the pegs D^8.

The ratchet is shown in full lines (Fig. 3) at the bottom of its movement and engaging with the pegs D^8, and it is shown in dotted lines in its raised position, and it will be understood that in this movement it will have racked the screw round a distance of two pegs, which

may be taken, in this instance, as representing a movement of the stops D^5 D^6 (Figure 1) a distance equal to one two needle space. It will now be seen that if the ratchet be lowered on the arm D^{10}, a distance of one tooth (as hereinbefore described), the first half of its rising movement will not move the rack wheel D^7, and the second half of its movement only will be operative and rack the wheel a distance of one peg, and the stops D^5 D^6 a distance of one needle.

It will be noticed that there might be danger of the nuts jamming if the ratchet were not stopped at the right time.

To avoid this we arrange a knocking-out-lever which is held out of action by a prop or equivalent, which in turn is connected to one of the nuts by an adjustable connecting rod in such a manner that at any desired position in the traverse of the nuts, the said prop is withdrawn and the ratchet is automatically knocked out of action.

E is the knocking-out-lever pivoted on a pin or axle E^1 and carrying a pin E^2 which is arranged to pass in front of the ratchet arm D^{10} but which in the position shown in full lines does not touch it. A prop F pivoted at F^1 is so arranged that in its normal position it supports the knocking-out-lever E in the position shown in full lines, and is retained in this normal position by a spring such as F^4 attached to the right hand bearing of the screw D^4 (Figure 1). A rod or bar F^3 jointed to this prop F passes over the nut D^3, resting on a lug F^2 carried by the nut D^3. The rod F^3 carries an adjustable stop such as shown at F^3 (Figure 1) which may engage with the nut D^3, when it is racked in a certain distance, so that the further movement of the nut draws the prop F from under the knocking-out-lever E, and so at a predetermined position of the nut D^3, the knocking-out-lever E is drawn down by the spring E^3 (Fig. 3) and the pin E^2 on the lever E engages with the top end of the racking arm D^{10}, and moves the teeth on the part D^9 out of contact with the pegs on the rack wheel D^7 as indicated by dotted lines, and thus the inward movement of the two stops D^5, D^6 carried by the nuts D^3, D^3 is automatically stopped as and when desired.

Having now particularly described and ascertained the nature of our said invention and in what manner the same is to be performed, we declare that what we claim is:—

1. A rotary or straight bar knitting machine which is adapted for producing a graduated width of splicing and which has adjustable sliding stops controlled by a right and left hand screw so that the rate of graduation can be varied as desired.

2. A knitting machine according to Claim 1 in which the right and left hand screw is controlled by an adjustable ratchet, so that a constant movement of a racking arm can produce a varied movement of the screw.

3. A knitting machine according to Claim 1 and having an adjustable stop, whereby the screw can be automatically stopped as described, substantially as described.

4. A rotary or straight bar knitting machine provided with mechanism substantially as hereinbefore described with reference to the drawing.

Dated the 31st day of August, 1923.

CARPMAELS, RANSFORD & NEWTON,
Agents for Applicants,
24, Southampton Buildings, London,
W.C. 2.

Redhill: Printed for His Majesty's Stationery Office, by Love & Malcomson, Ltd.—1924.

708

849

DEFENDANT'S EXHIBIT D1

Knitting Mathematics and Mechanisms

PREPARED FOR THE TEXTILE TRADES ADVISORY COMMITTEE OF THE CITY OF LEICESTER MUNICIPAL TECHNICAL AND :: :: ART SCHOOLS :: ::

BY

JOHN CHAMBERLAIN

SILVER MEDALLIST CITY AND GUILDS OF LONDON INSTITUTE. HOSIERY MANUFACTURE AND WOOL DYEING: HEAD OF TEXTILE DEPARTMENT, CITY OF LEICESTER TECHNICAL SCHOOL.

LEICESTER:

J. W. HEMMINGS & CAPEY,
PRINTERS,
CHARLES STREET.

1923.

709

850

tion of the worm shaft. To obtain the maximum amount of contact and wear, it is often found advisable to cut concave teeth on the worm wheel. Worm gearing is used largely for driving the drawing-off rollers of circular machines.

Drunken worms are used where the movement of the worm wheel is required to be intermittent. In this case the thread spiral is not continuous, and for a part of the revolution of the worm shaft no movement is transmitted.

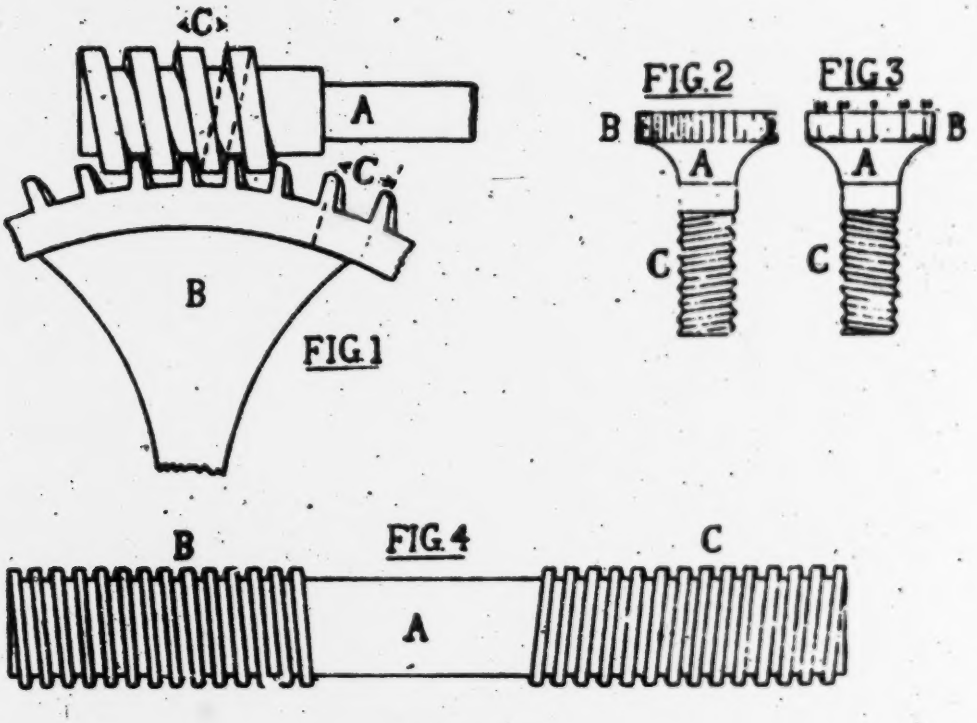

Diagram 8

WORM GEAR AND SCREW THREADS.

A special form of drunken or intermittent worm is used on warp knitting machines, and is known after the name of its inventor, as a "Dawson" wheel. This form of intermittent worm is often used instead of a ratchet wheel where a number of movements are required in one revolution of the shaft, as the action is steadier and more positive.

Screws and Screw-Threads.—Owing to the fact that knitting machines are built both on the Continent and in America, as well as in Great Britain, there is a large variety of threads used. Even

the British builders in some cases use bastard sizes and bastard threads instead of the standard Whitworth and British Association threads. This often causes unnecessary trouble and it is advisable to keep a stock of screws of each class to prevent machines from standing idle whilst screws are fitted. Knitting machines abound in set-screws as many minor adjustments are necessary to effect slight alterations in the stitch length, position of cam rollers and controlling levers. Micrometer screws should be used for adjusting the positions of the stitch cams as very fine adjustments have to be made. Typical examples of these are shown in Figs. 2 and 3, Diagram 8. Set screw A (Fig. 2) has a disc-like head, the edge of which is cut into V-shaped notches B, a small spring retaining the screw in a given position. This thread (C) is right-handed, although in some cases a left-hand thread is used, as shown in Fig. 3 at C. The head B of the set screw A in Fig. 3 is divided into 100 parts so that alterations may be made with exactness and without counting, although in this case a locking screw is required to keep the screw in position. A micrometer screw having 20 threads per inch and 100 divisions marked on the head enables the operating parts to be adjusted to .0005 of an inch. The necessity of the micrometer adjustment was realised in the early days of the hand frames which were fitted with deep star nuts, left-hand thread, with from 50 to 100 nicks round the edge. No locking screw was needed as the nut was spring retained. In spite of this early use of the micrometer nut many modern knitting machines have very crude adjustments, and in some cases the stitch cams cannot be adjusted individually to take up any uneven wear. Micrometer screws with numbered divisions are a great asset, especially on the multi-feeder machines, where frequent alterations are required in the stitch length.

Screw-threaded spindles are used on winding machines for raising the guides as the bobbins fill. In these cases square, vee, and saw-tooth threads are all used.

Another use of the square thread is for gradually reducing or increasing the traverse of yarn guides. Fig. 4, Diagram 8 shows a spindle A cut with right-hand thread B and left-hand thread C. Rotation of this spindle will cause screw-boxes or specially constructed nuts to move in opposite directions for the purpose previously mentioned.

711

852

A somewhat unusual application of the screw thread in knitting machines is found on certain power purl machines where the continued rotation of a screw spindle causes the cam carriage to traverse across the needle beds. To effect this in both directions straight and crossed belts are used, the belts being automatically shifted .. om fast to loose pulley, and vice versa as the carriage reaches the end of its traverse. The only use of the screw for the application of pressure is to be found in the older types of steam presses where the upper bed is raised and lowered by means of a long handle attached to the screw spindle.

Speed Gears.—In order to obtain maximum speed on certain knitting machines it is found necessary to conduct certain operations at a lower speed than that used in the normal knitting. These machines include straight-bar machines, rib top machines, and seamless hosiery machines. Usually the gear is of a simple countershaft type, an example of which is shown in Diagram 9. A is the shaft of a seamless hose machine. Encircling this shaft is the driving sleeve B to which is attached the pinion C with a cut boss P. The handle E is fastened to the sleeve by the screws F. Three pulleys G, D, and J are used, G being the loose pulley which runs freely on the boss of the low speed pulley D. A slot is cut in the boss of pulley D to receive the projections on the handle E so that the pulley is secured to the sleeve B. Hence a direct drive is obtained either by turning the handle E or by driving pulley D. The high speed pulley J is free on the sleeve B and has attached to it by the screws S the toothed wheel K. When the belt is on the pulley J, the wheel K drives the wheel M which is attached to the countershaft L. The latter also carries the spur wheel N which drives the pinion C and the sleeve. The countershaft L is carried on a bracket Y attached to the housing Q. The sleeve runs in a long bearing also screwed to the housing Q. The increase in speed is dependent upon the numbers of teeth in the drivers and followers, the usual increase being 20 to 25%. The high speed is obtained through the gears in order that the machine in starting from rest may be driven first at the low speed. The change in speed is obtained automatically by the moving of the belt fork.

A type of epicyclic gear is used on the X.L. types of machines, the whole of the gear wheels being enclosed within the pulleys.

—SPINDLES OF PRIOR ART—

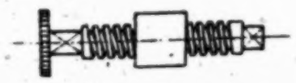

REGULAR COTTON CARRIER END STOPS.

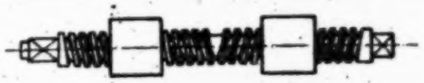

J.H. WOODWARD BRI. 19,627 1891

LAMB AND NOON BRI. 15,129 1885

W.T. ROWLETT U.S. 500,953 JULY 11, 1892

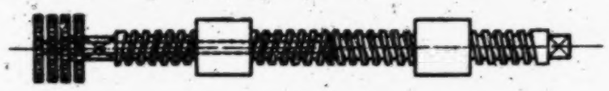

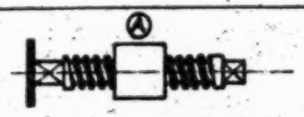

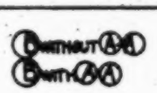

J.B. MEIXNER BRI. 7476 1837
GOTHAM PRIOR USE

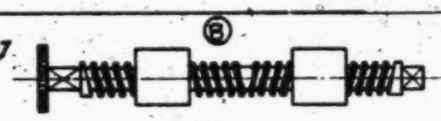

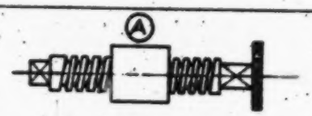

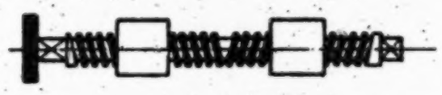

J. MILLER U.S. 1,564,438 OCT. 20 1923

T. LIEBERKNECHT U.S. 981,663 MAY 25, 1910

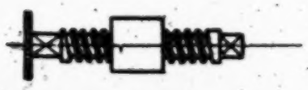

R.E. SCHLETTER U.S. 1,713,628
JUNE 19, 1922
NOV. 5, 1925

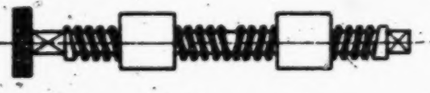

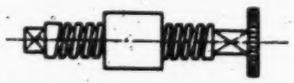

G. SOUTER U.S. 478,527 OCT. 22, 1889

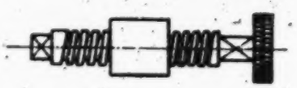

E. ROE BRI. 1931 1869

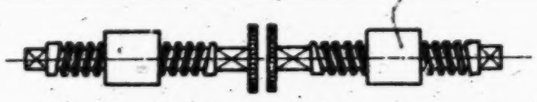

H. WILLATT BRI. 573 1871

W.E. CHAPMAN U.S. 1,163,370 NOV. 2, 1910
(NOT FOR CARRIER STOP)

854
DEFENDANT'S EXHIBIT F1

—SPINDLES AND CARRIERS—

SHEET 2

7

WOODWARD ET AL

END, TWO WAY THREADED SPINDLE FOR BODY CARRIER ONE WAY PICKING.

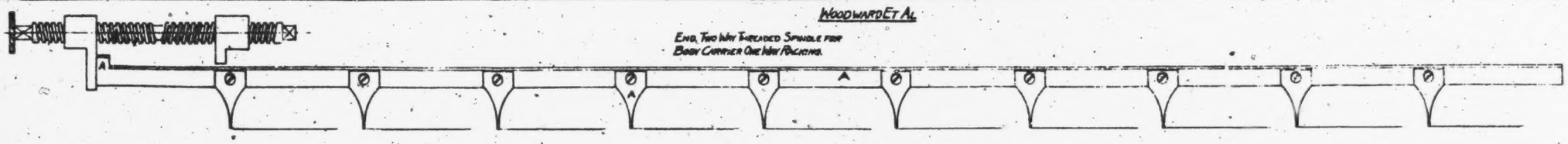

8

WOODWARD ET AL

SAME AS PRECEDING WITH CENTER FIXED STOP FOR SPLICING OR SPLIT SHAFT COURSE CARRIERS.

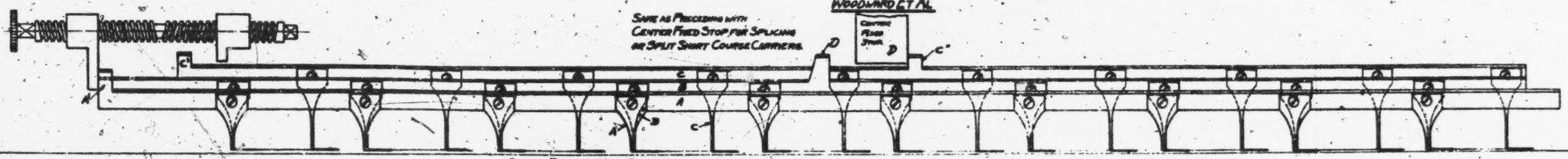

9

WOODWARD ET AL

SAME AS FIRST MENTIONED DRAWING WITH DUPLICATE AT OTHER END OF MACHINE OF THE ORIGINAL MENTIONED TWO WAY THREADED SPINDLE, TO WHICH HAS BEEN APPLIED THE THREAD PICKING OF LEVER 81, WHICH ADDITIONAL SPINDLE IS USED TO DECREASE OR INCREASE THE TIMED STROKE OF SPLICING OR SPLIT SHAFT COURSE CARRIERS

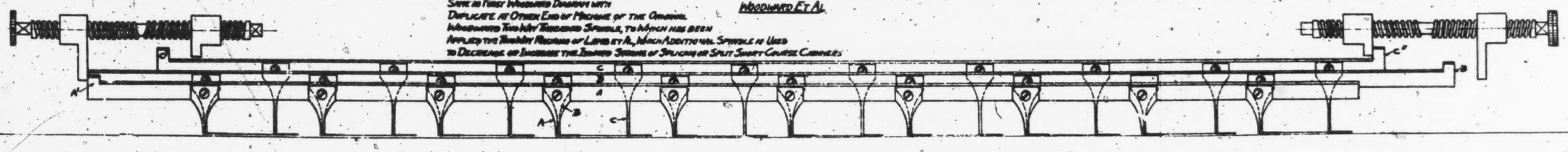

DEFENDANT'S EXHIBIT H 1

855

Fig 1.

HERRINGBONE VERTICAL SPLIT-SATIN FIGURE

715

856

Fig 2.

REGULAR SPLIT YARN CARRIER STOP MECHANISM FILED ENDWISE.
HERRINGBONE—VERTICAL SPLIT SUTURE.

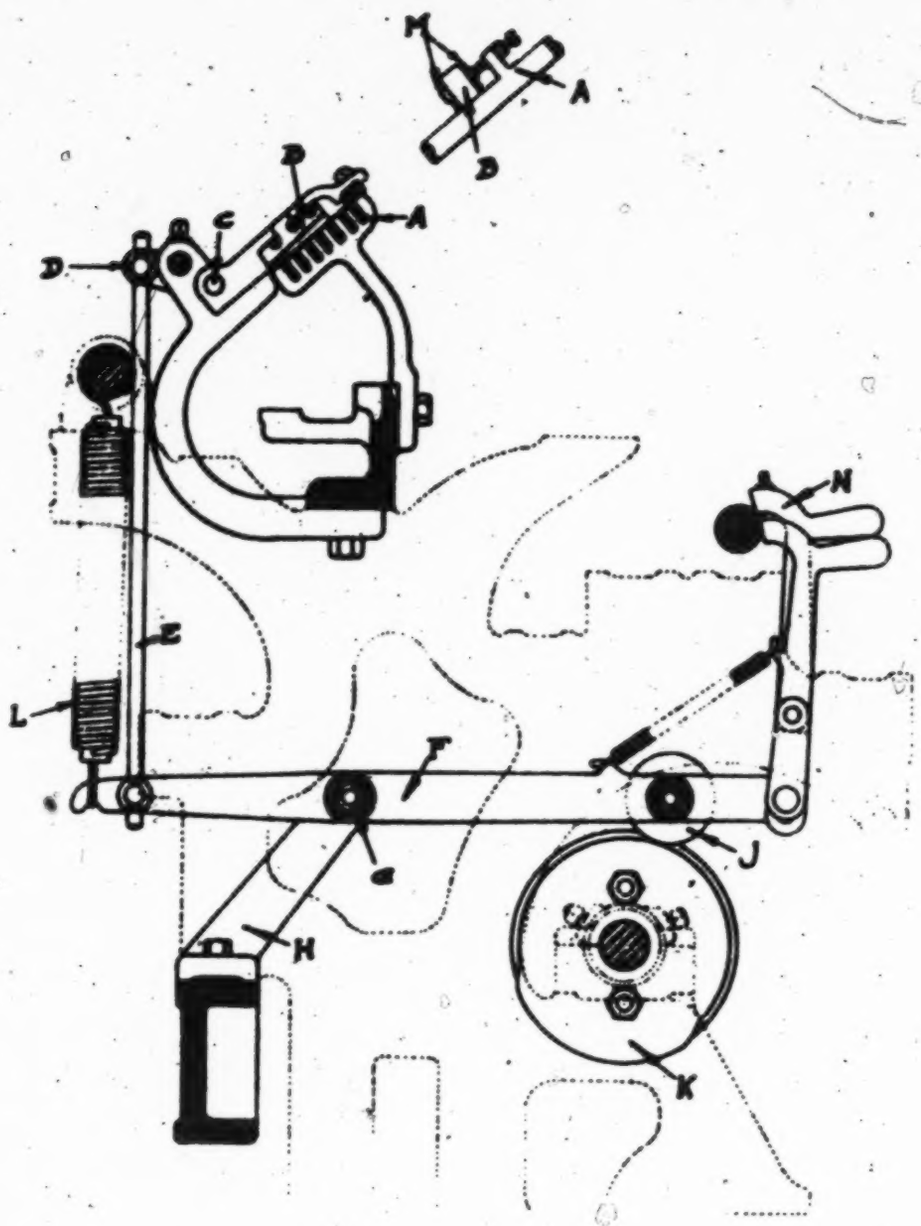

M.C. MILLER, M.E. APRIL 9, 1925.

FIG 3

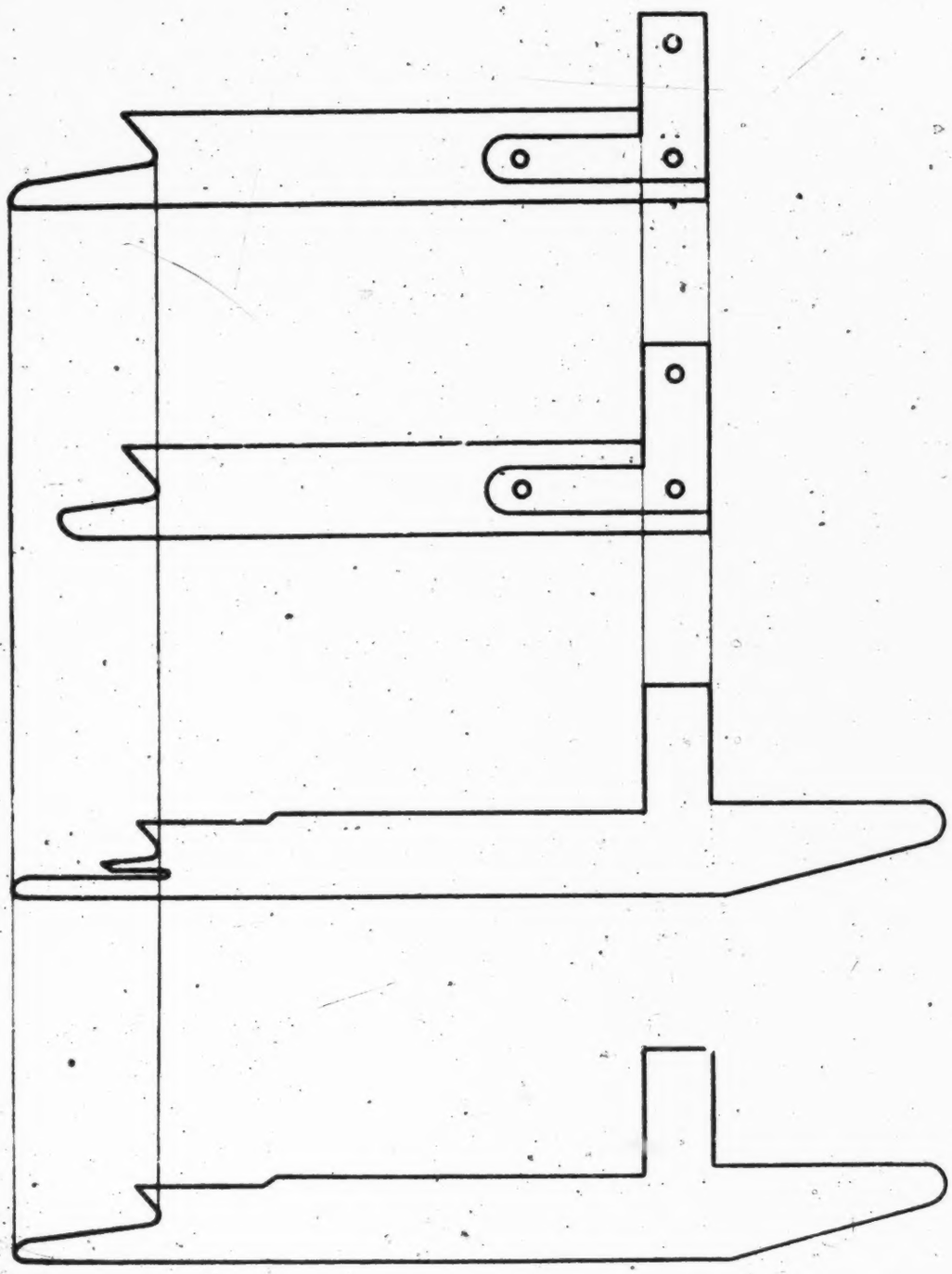

HERRINGBONE — VERTICAL SPLIT — SUTURE SINKERS

MC MILLER, M.E. APRIL 1935

858

Def. Ex. 141 page 4.

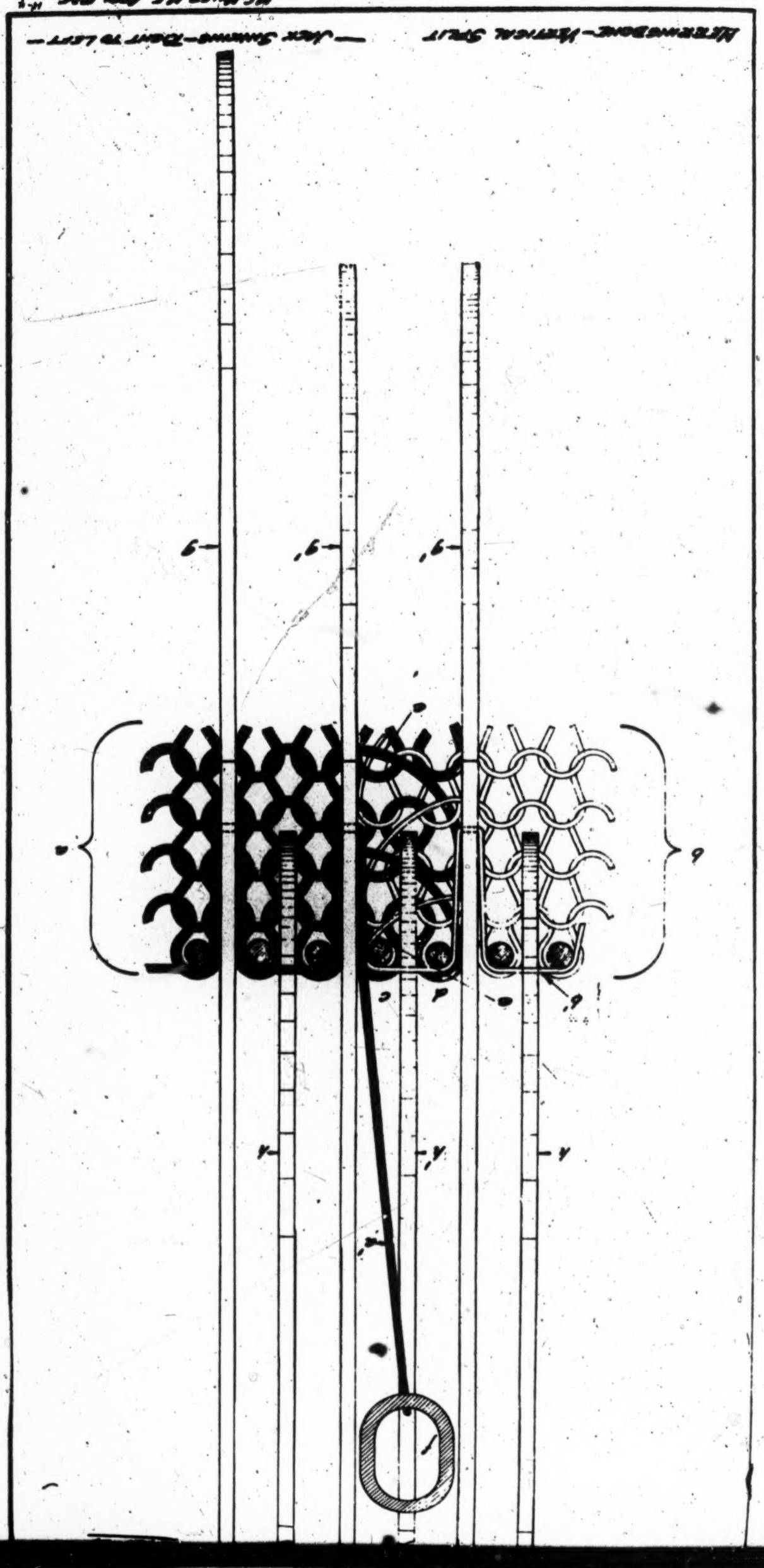

Fig 3

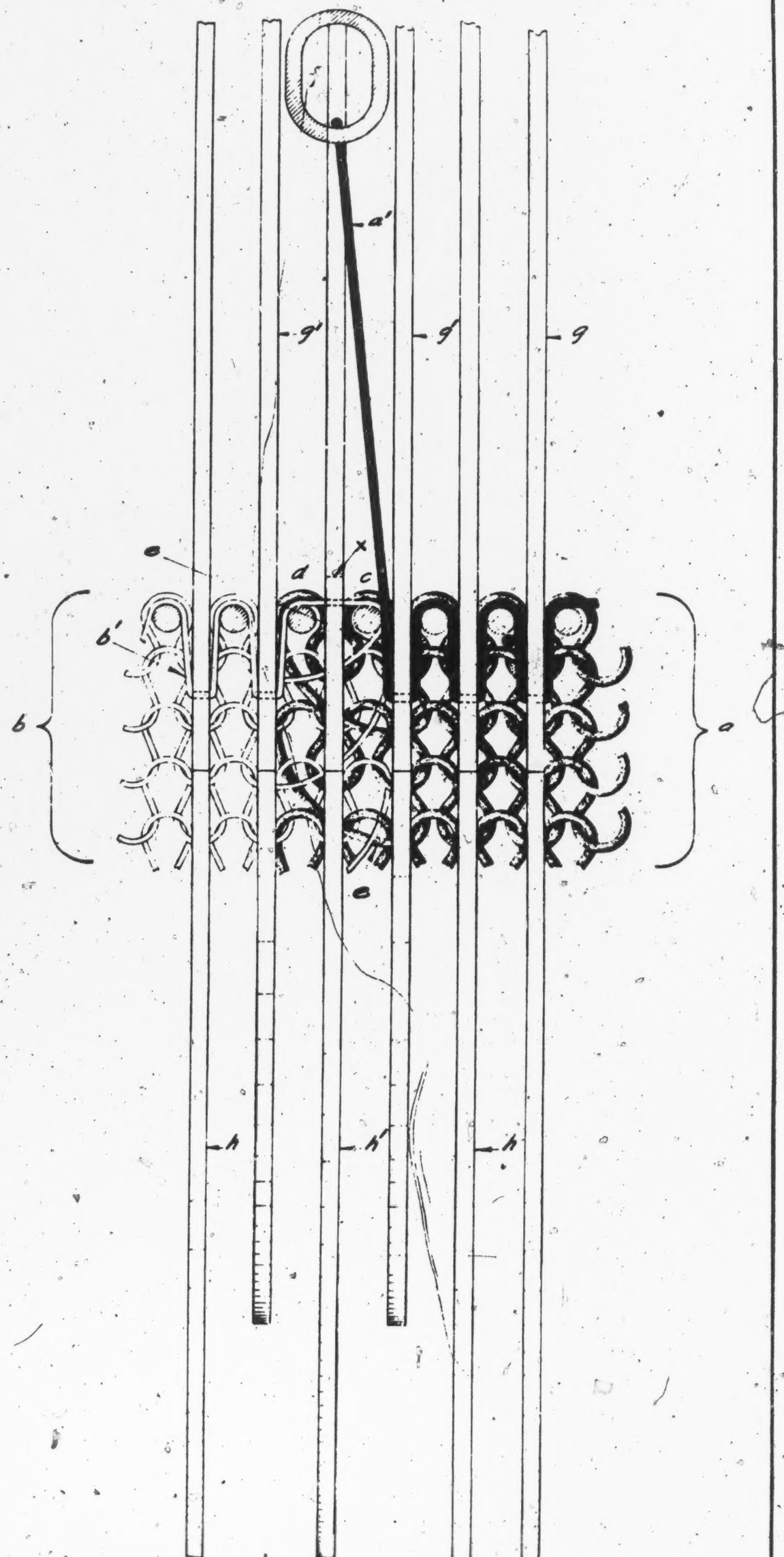

HERRING BONE—VERTICAL SPLIT DIVIDING — RIGHT TO LEFT —

M.C. MILLER, M.E. APRIL 1935. H'-3

Def. Ex. H-1 page 6.

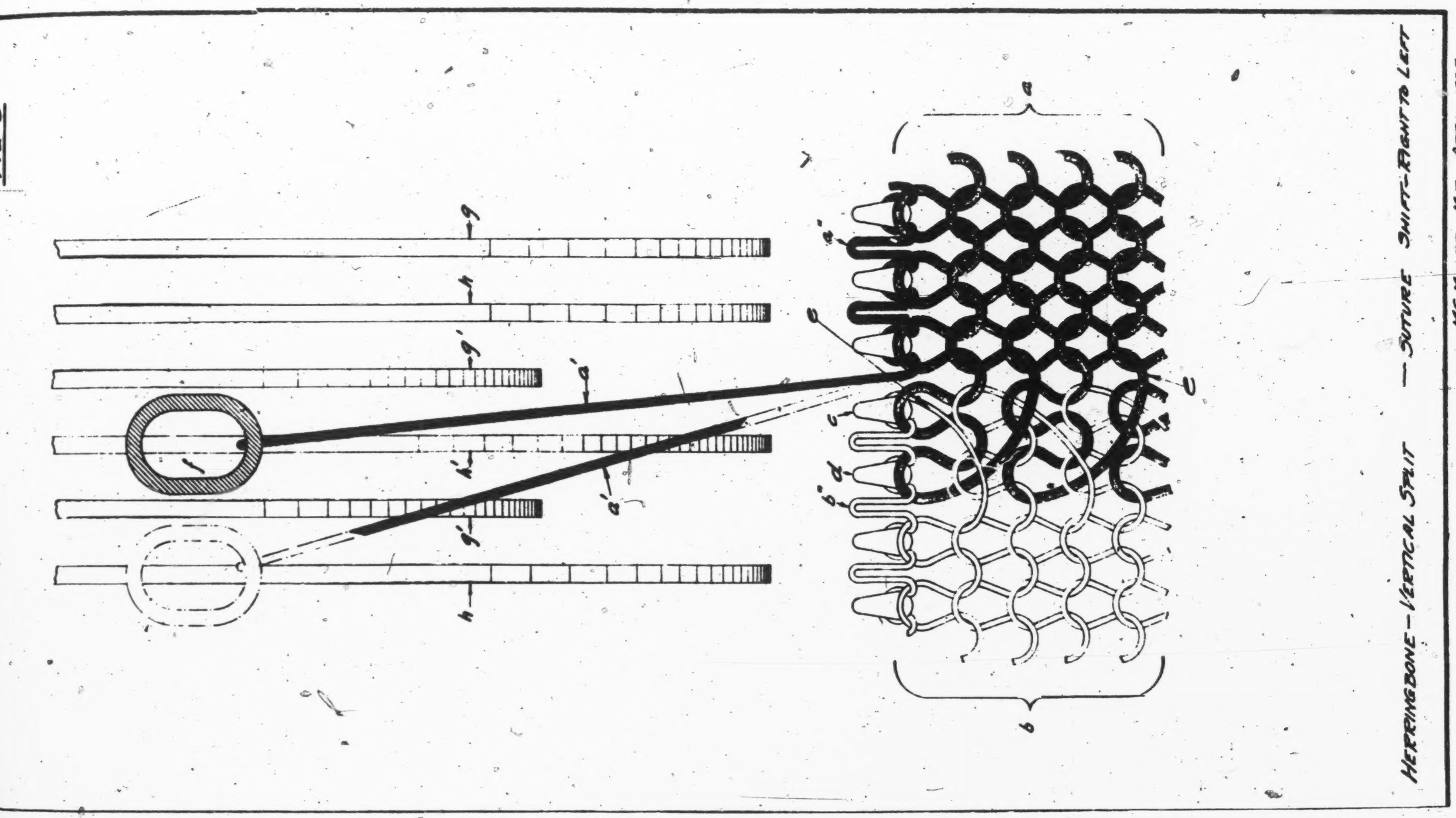

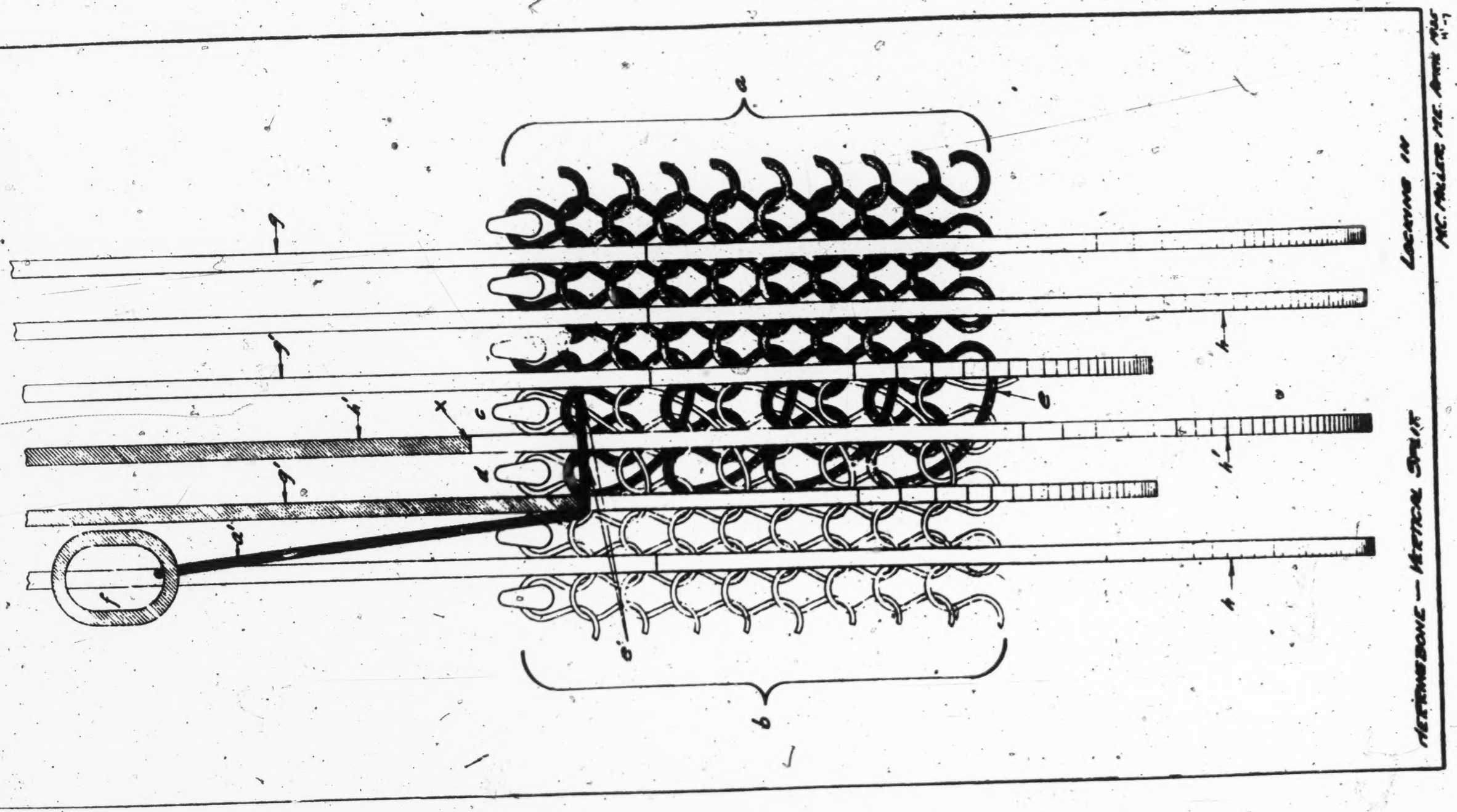

Fig 7

Fig 8

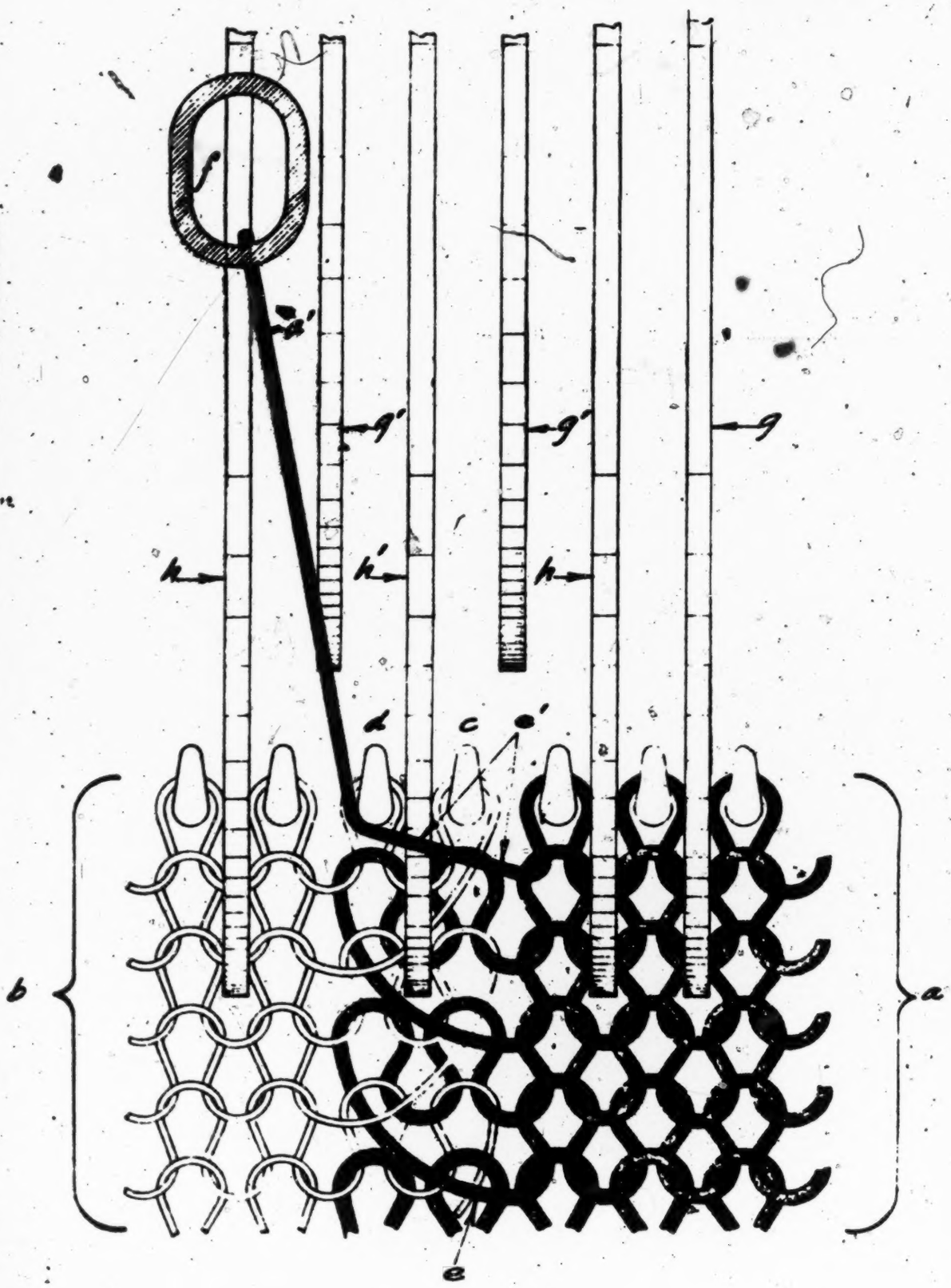

HERRINGBONE—VERTICAL SPLIT

—PRIOR TO REVERSE TO RIGHT—

M.C. MILLER, ME. APRIL 1936

Fig 9

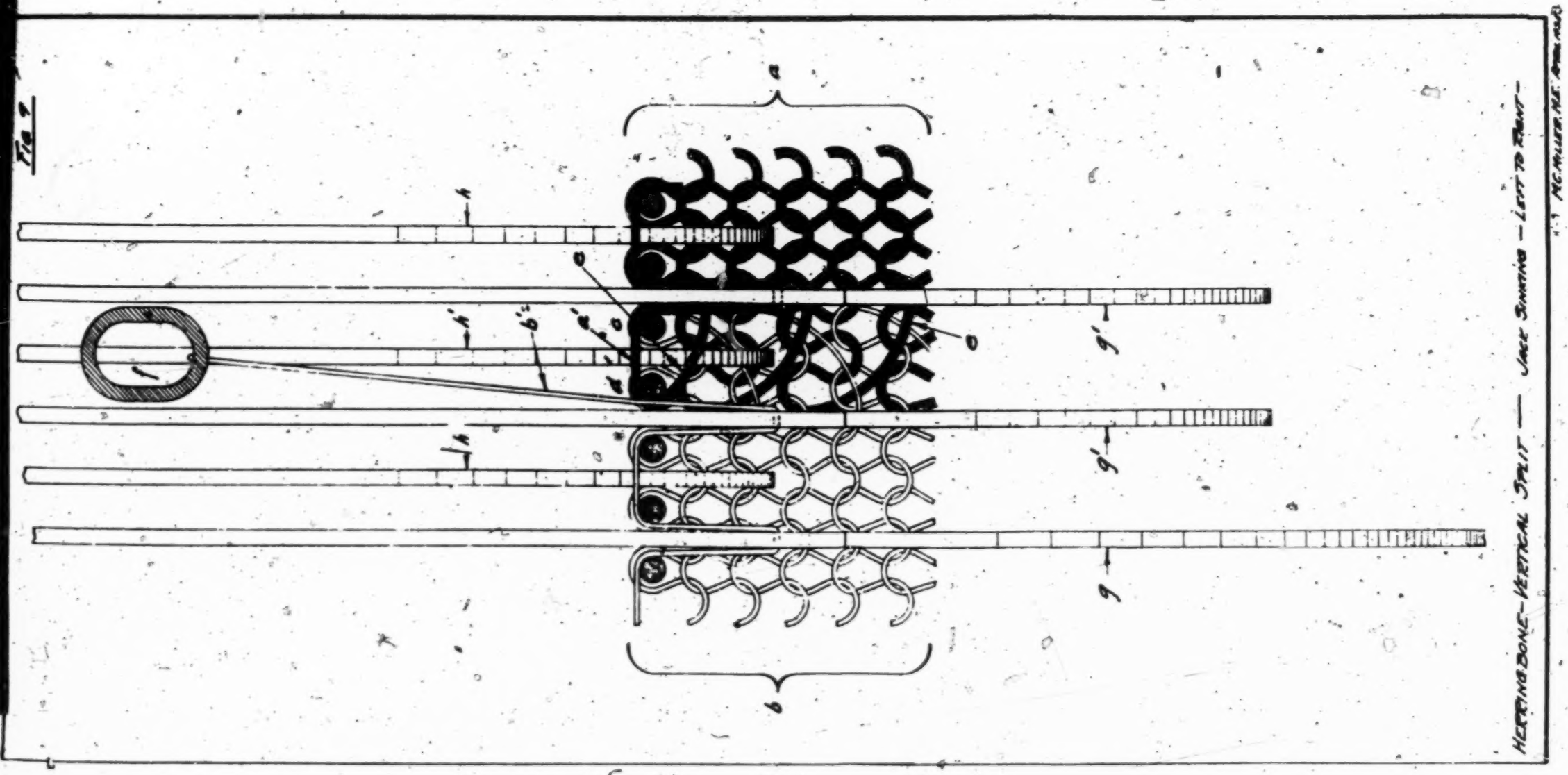

HERRING BONE-VERTICAL SPLIT — JACK SINKING — LEFT TO RIGHT —

M.C. MILLER, M.E. ATTORNEY

723

864
DEFENDANT'S EXHIBIT J 1

C-1

HERRINGBONE SPLIT

SCHLETTER PATENT Nº1.713.628

FABRIC SHOWING R.H. SUTURE

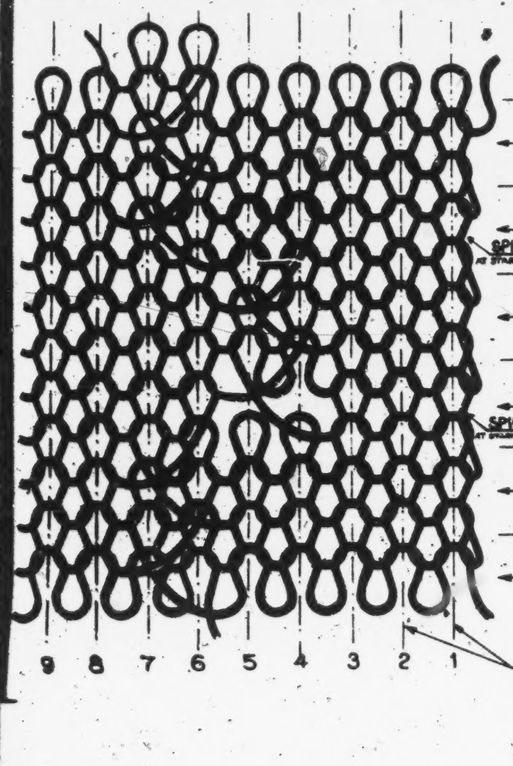

YARN LAYING DIAGRAM

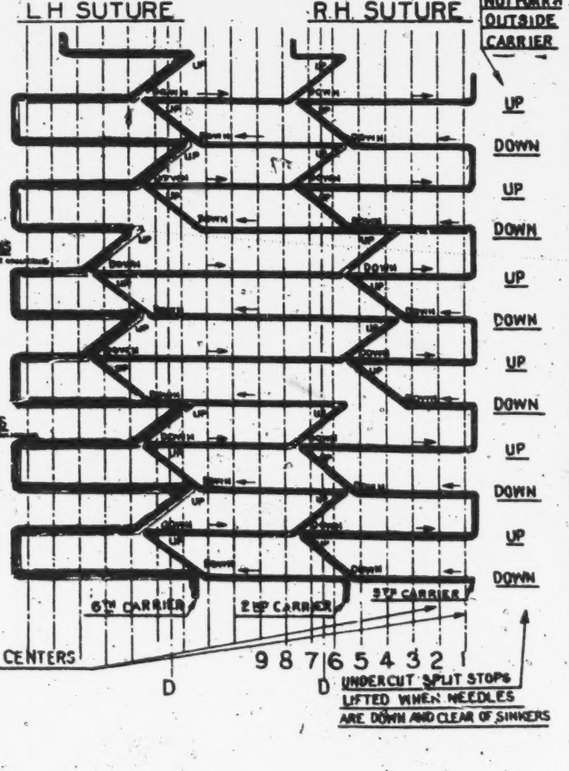

C-1A

HERRINGBONE SPLIT

SCHLETTER PATENT Nº1.712.628 Dep. Ex. J1 668-Ct

CARRIER MOVEMENT DIAGRAM

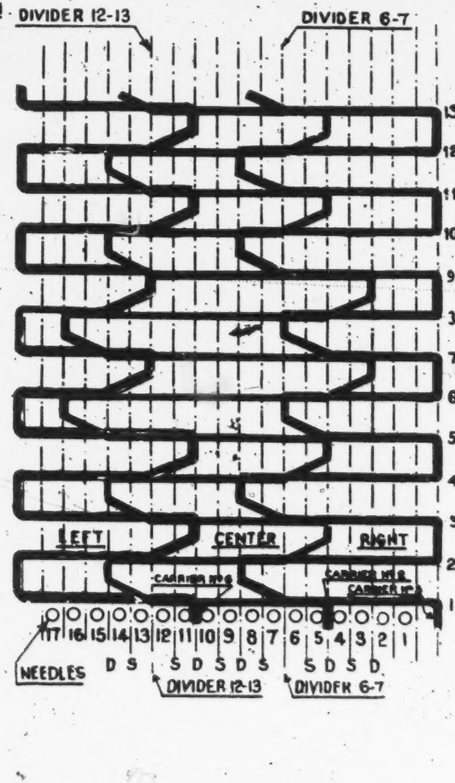

SPINDLE AND CARRIER STOP DIAGRAM

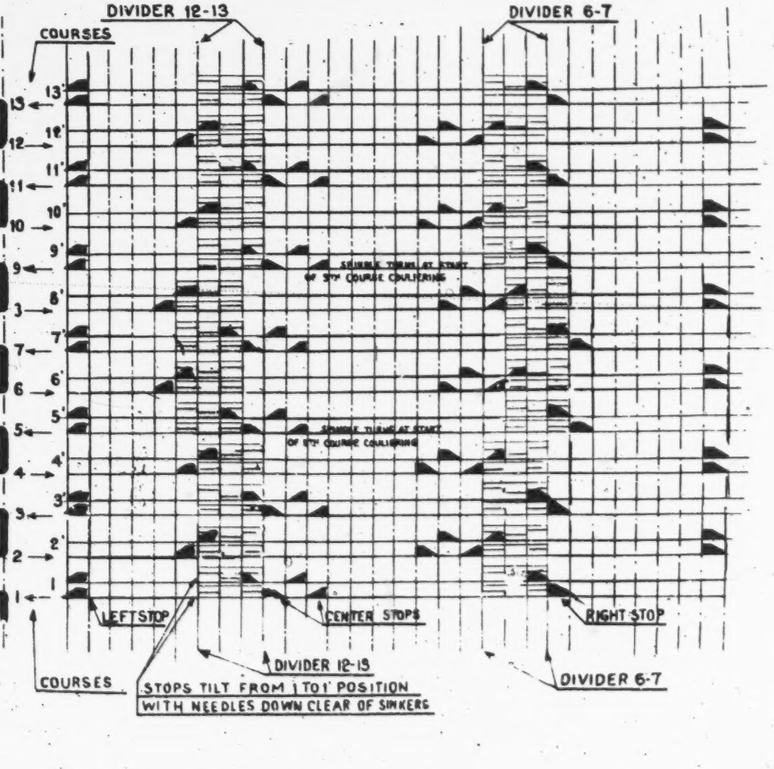

FOUR NEEDLE LAP SPLIT

B-1

FABRIC. SHOWING R.H. SUTURE

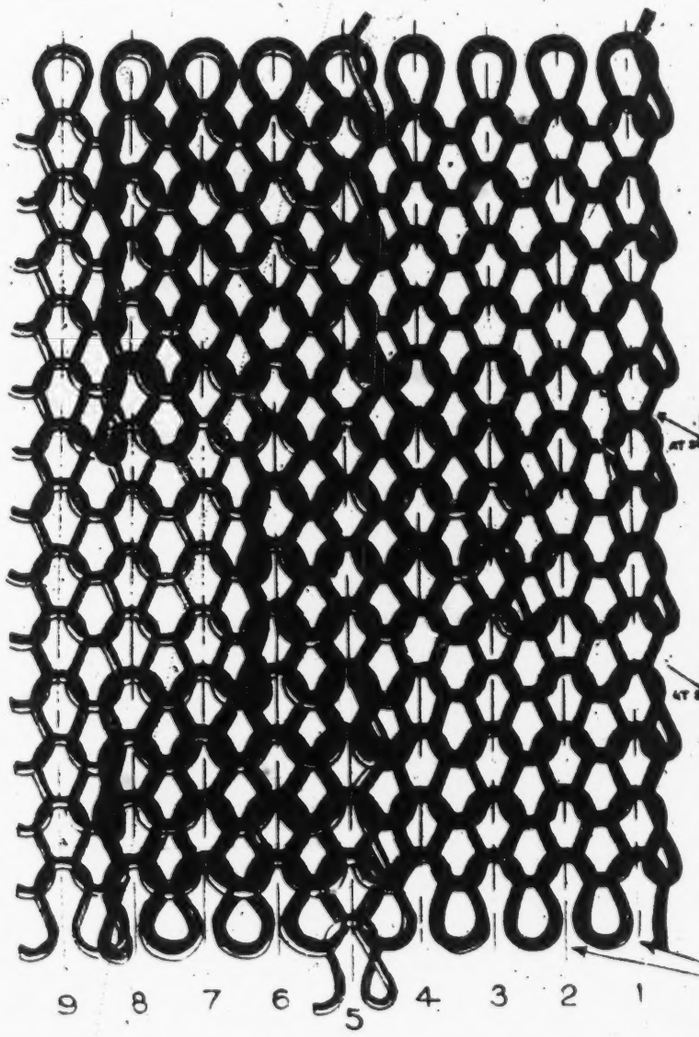

YARN LAYING DIAGRAM

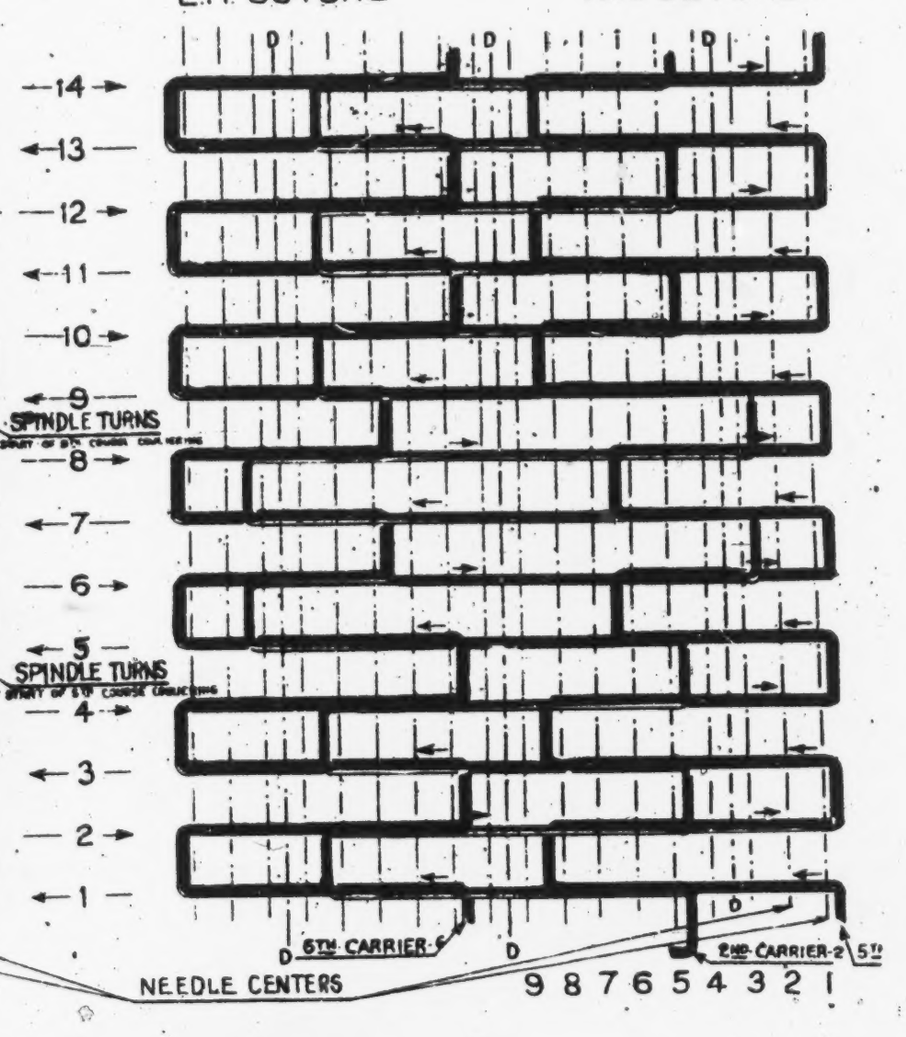

[redacted]

Page Tightly Bound

724

866

DEFENDANT'S EXHIBIT 01

A-1A

SPINDLE STOP AND CARRIER STOP DIAGRAM

A-1B

LIEBERKNECHT SUTURE

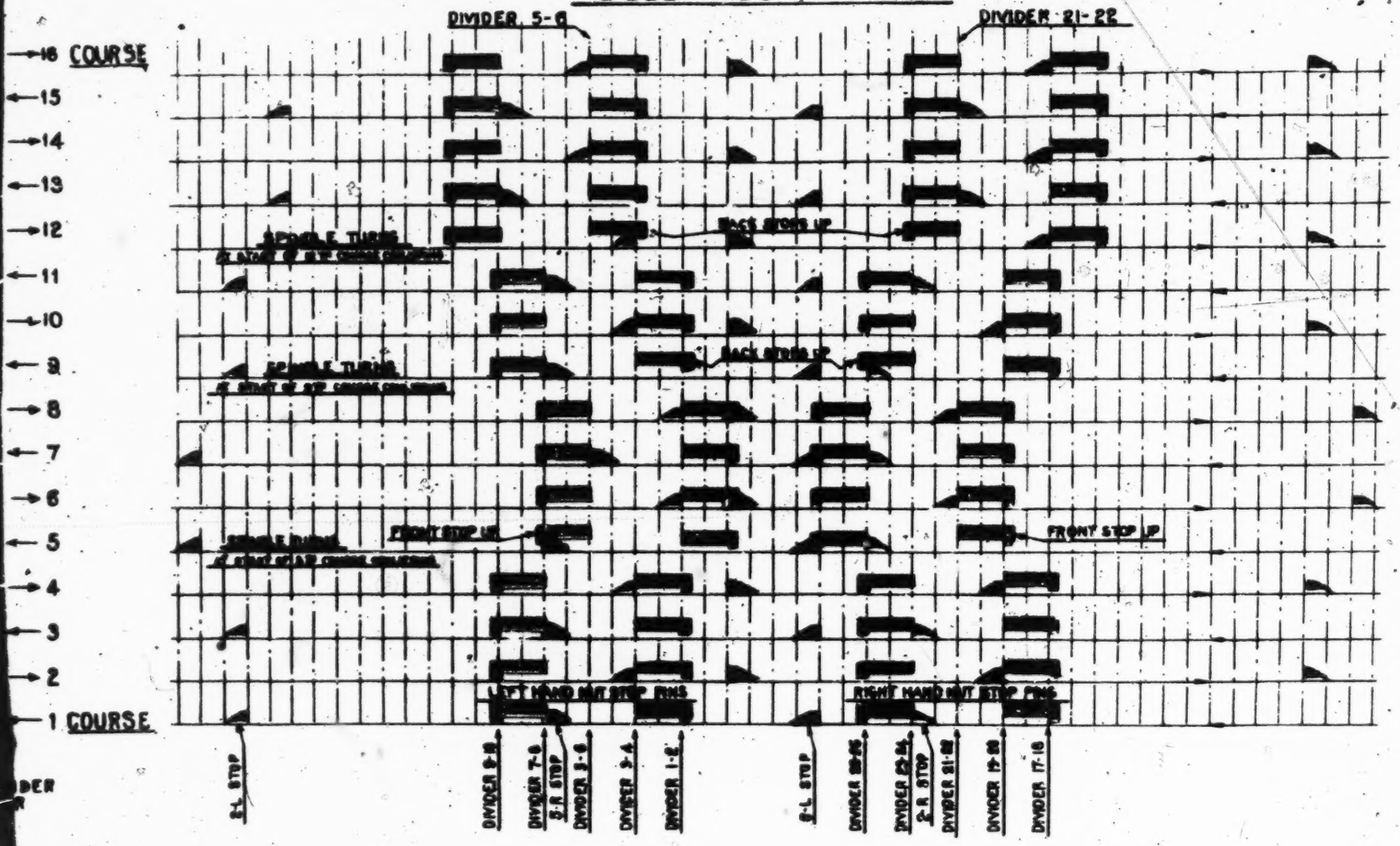

TWO NEEDLE LAP SPLIT

A-1

FABRIC SHOWING R.H. SUTURE

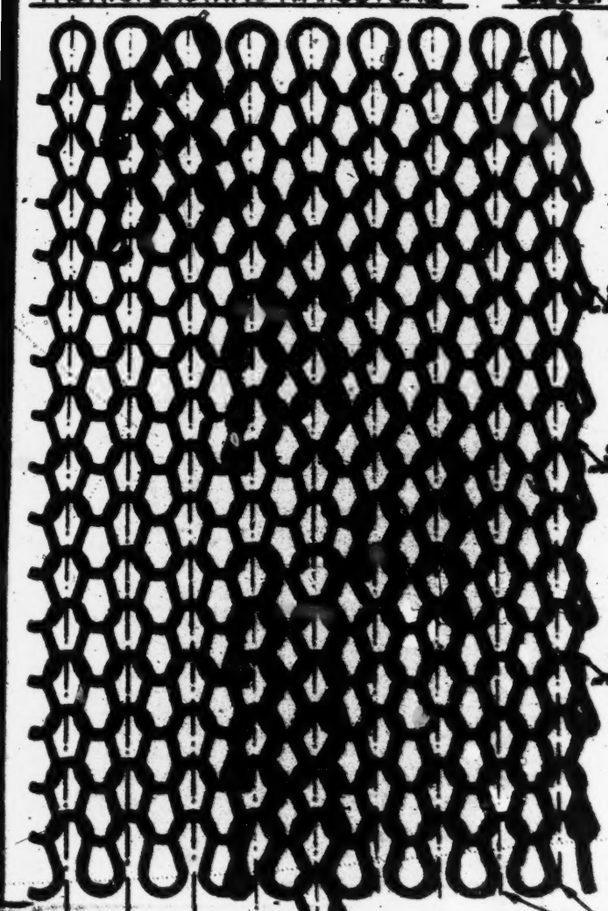

LIEBERKNECHT SUTURES

YARN LAYING DIAGRAM

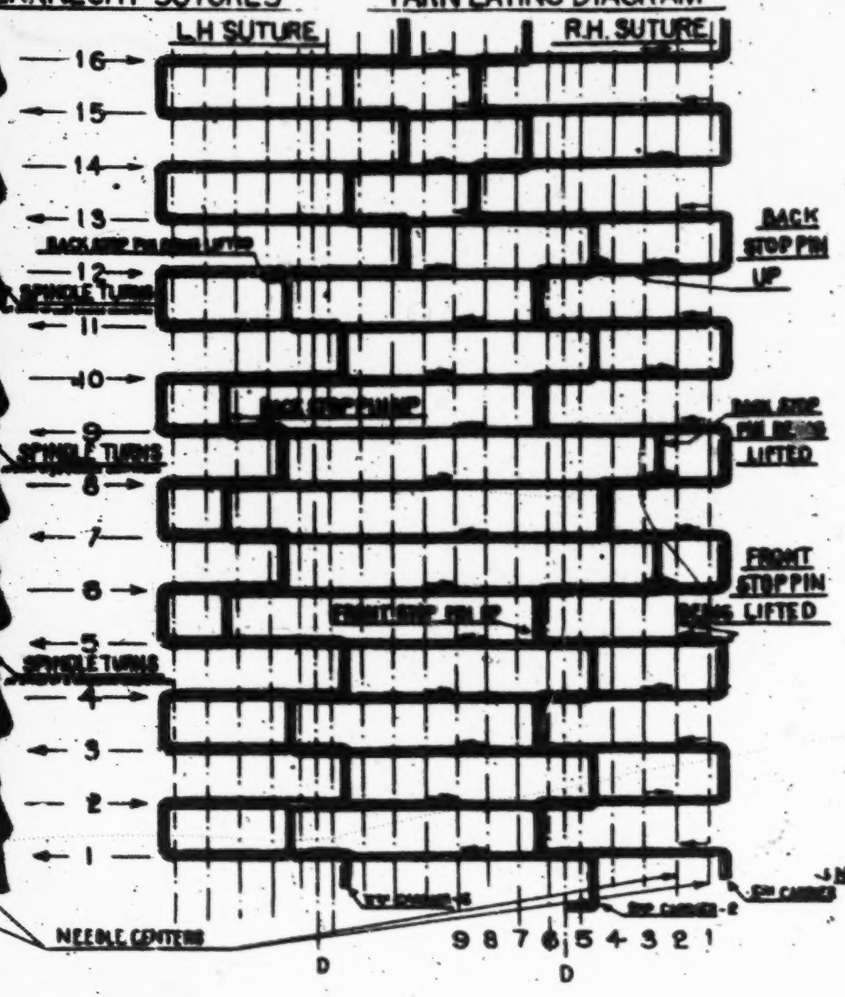

CARRIER MOVEMENT DIAGRAM

LIEBERKNECHT SUTURE

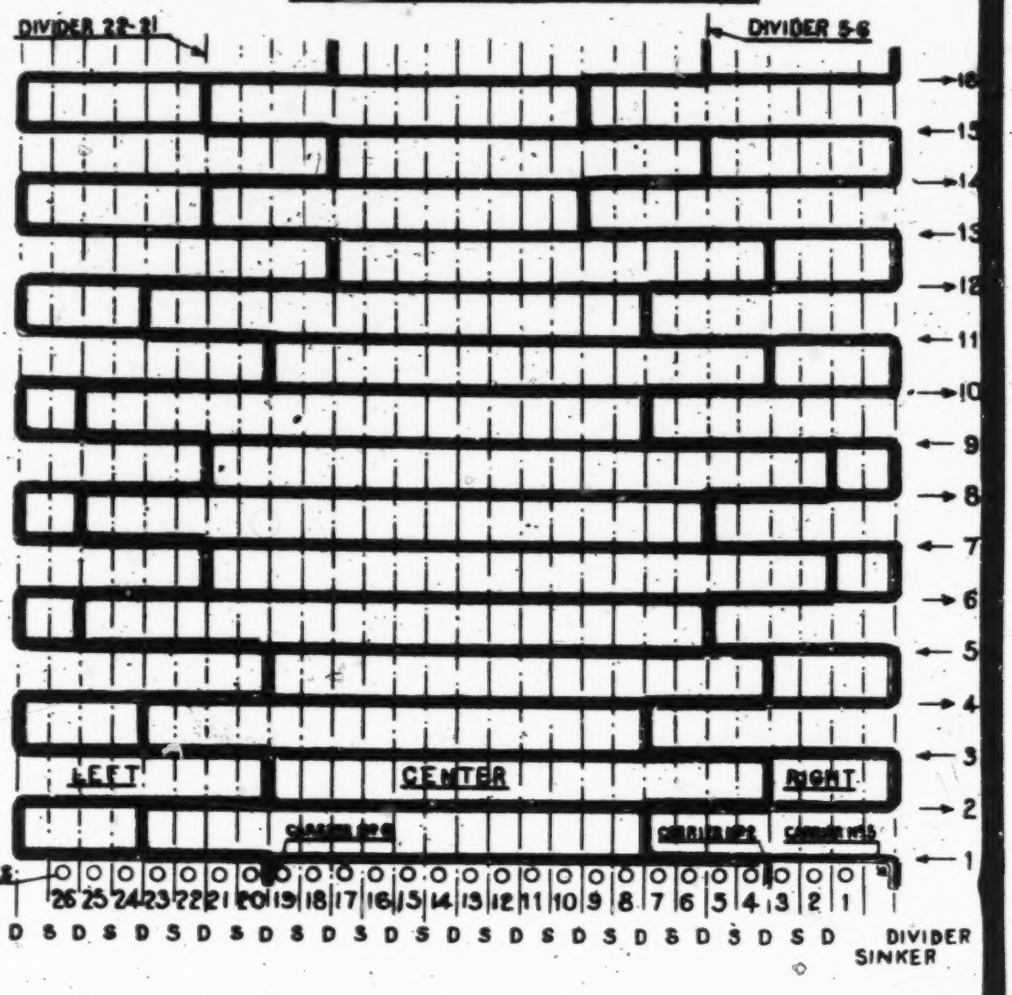

[fol. 867] DEFENDANT'S EXHIBIT C-2

Translation

Louis Hirsch, Inc., 556 Gregory Avenue, Weehawken, N. J.

October 24, 1927.

Order No. 774

To Karl Lieberknecht, Oberlungwitz, Sa.
Ship directly to Philadelphia.
Delivery: as soon as possible.

7 —Special Pointed Heel Attachments for variable width reinforcing designs, like sketch. to widen and narrow over two needles.
Rocker should also be for widening and narrowing.
For Leggers No. 5278, 5207, 5400, 5517, 5534, 5518, 5121.
Customer: Minisac Mills, Inc.,

729

868

DEFENDANT'S EXHIBIT D 2

LOUIS HIRSCH, INC.

KNITTING MACHINERY AND ACCESSORIES

556 GREGORY AVENUE

WEEHAWKEN, N. J.

March 12, 1928.

EPHONE, UNION 502

NEW YORK OFFICE
28 BROADWAY
WISCONSIN 3230-1

UR ORDER NO.

PARTMENT

R ORDER NO

PPED VIA

RMS

SOLD TO Rosedale Knitting Co. Inc.,
Reading, Pa.

ADDRESS

SS NEW YORK - Arrived in New York on 3/12/28

As per Specification "D" - Order Copy dated 9/11/26.

MACHINE NO. 5831
CASES KL 3431/33

1 KARL LIEBERKNECHT FULL FASHIONED HOSIERY MACHINE
Model 1927 - High Speed Type

Legger, 42 gauge, 24 sections at 14" each,
7 threadcarriers, with attachments for:

Split
Plating
Movable knocking-over bits
Jack spring bars
Shock absorbers
and accessories - - - - - - - - - - - - - $8250.00

Split Attachment for making spliced
high heels with narrowing and
widening, also split re-inforced
selvage - - - - - - - - - - - - - - - - - 1125.00

$9375.00

Page Tightly Bound

730

869

DEFENDANT'S EXHIBIT F 2

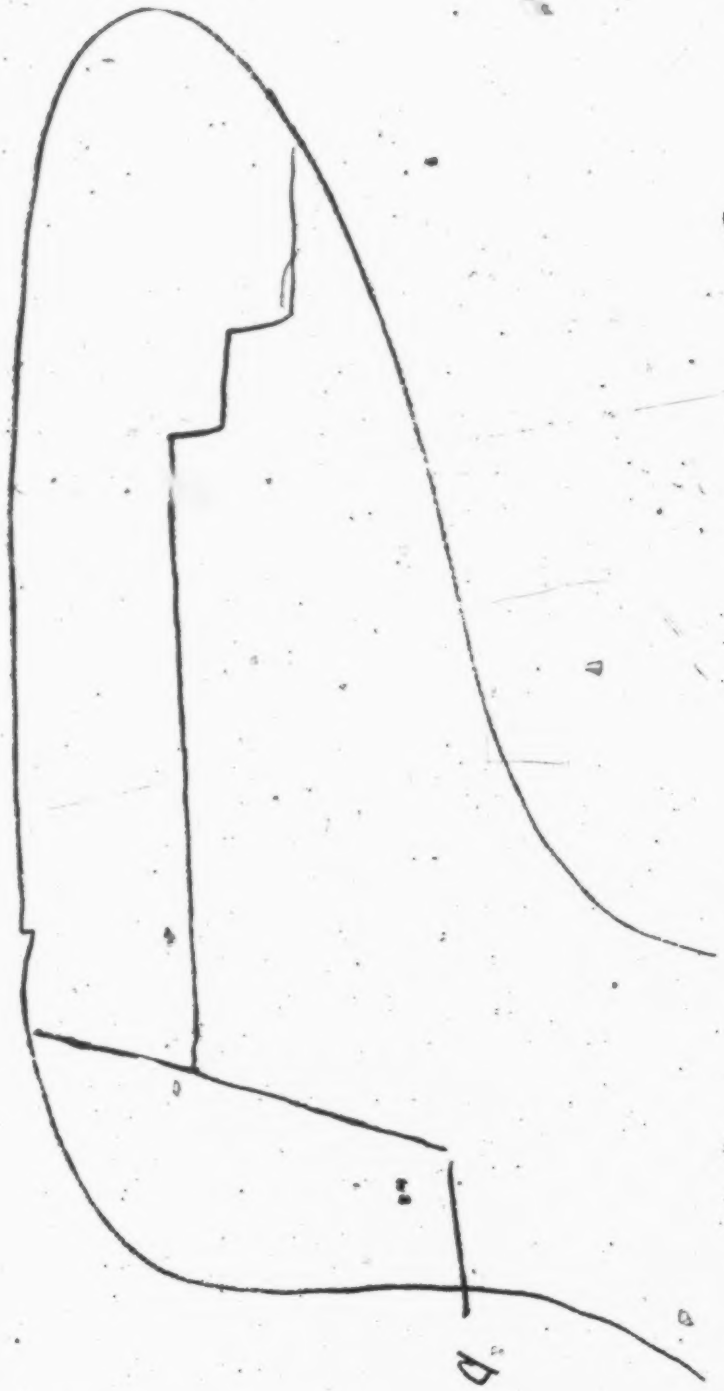

[Vols. 870-875]

DEFENDANT'S EXHIBIT L-2

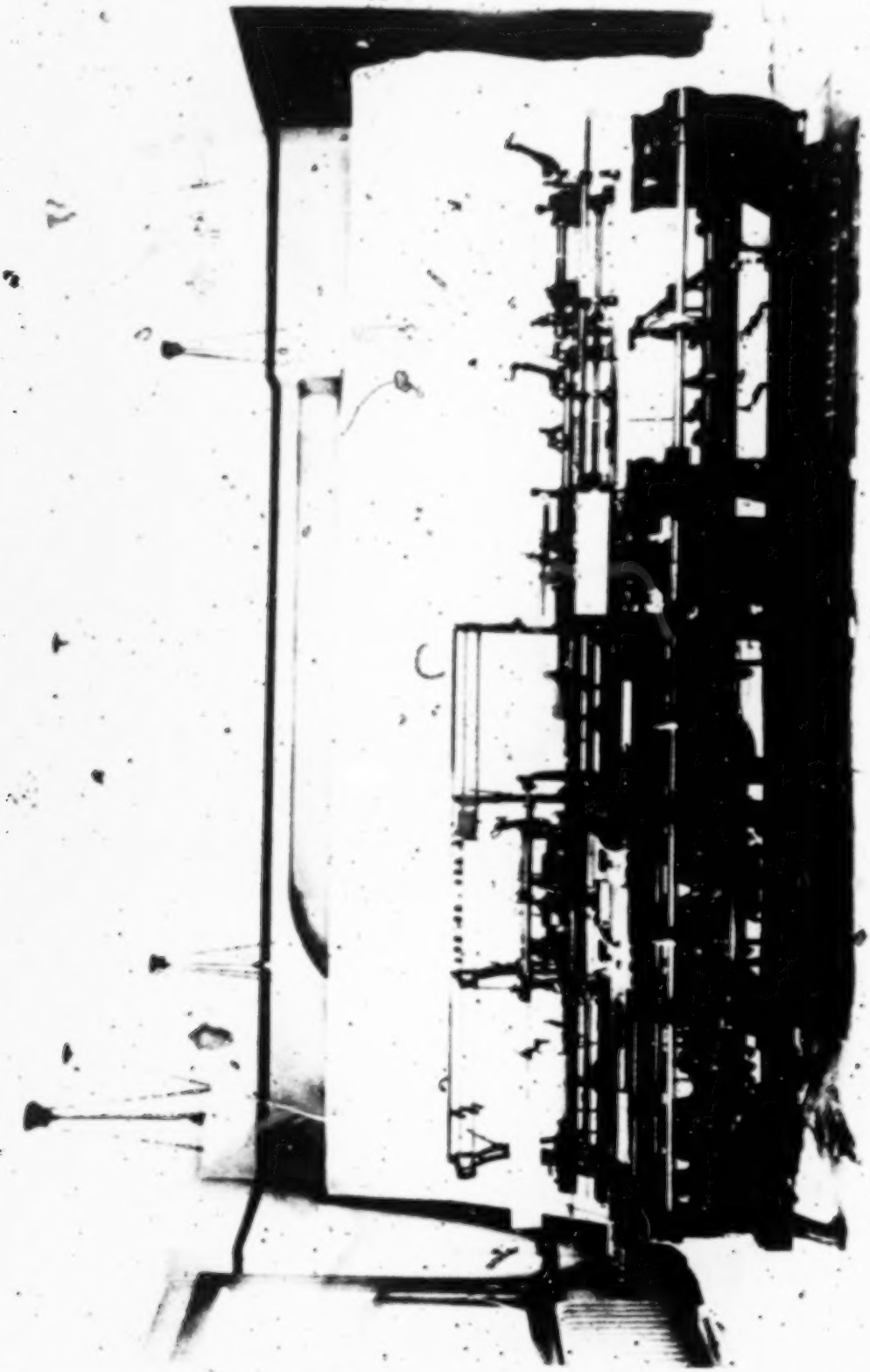

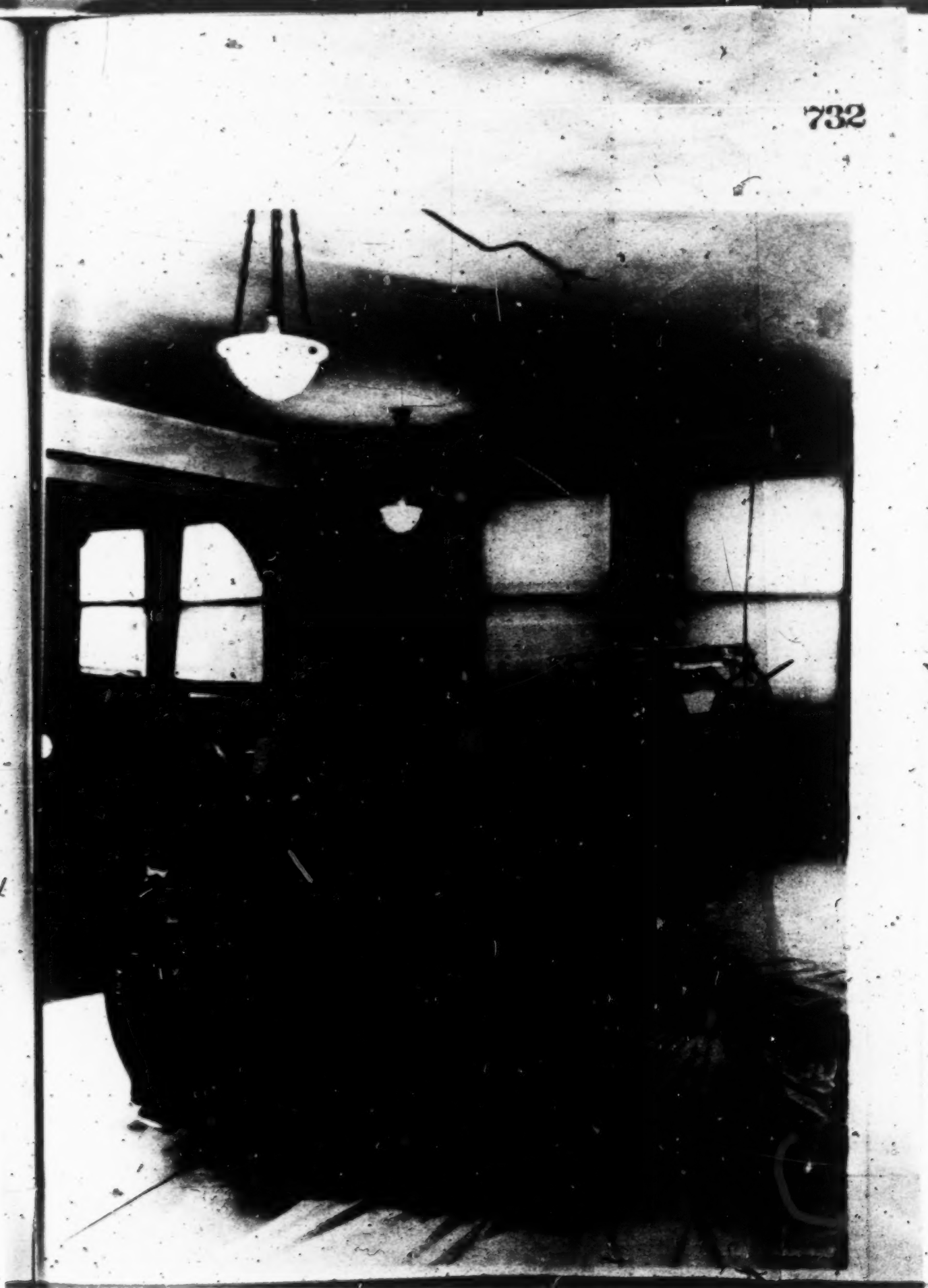

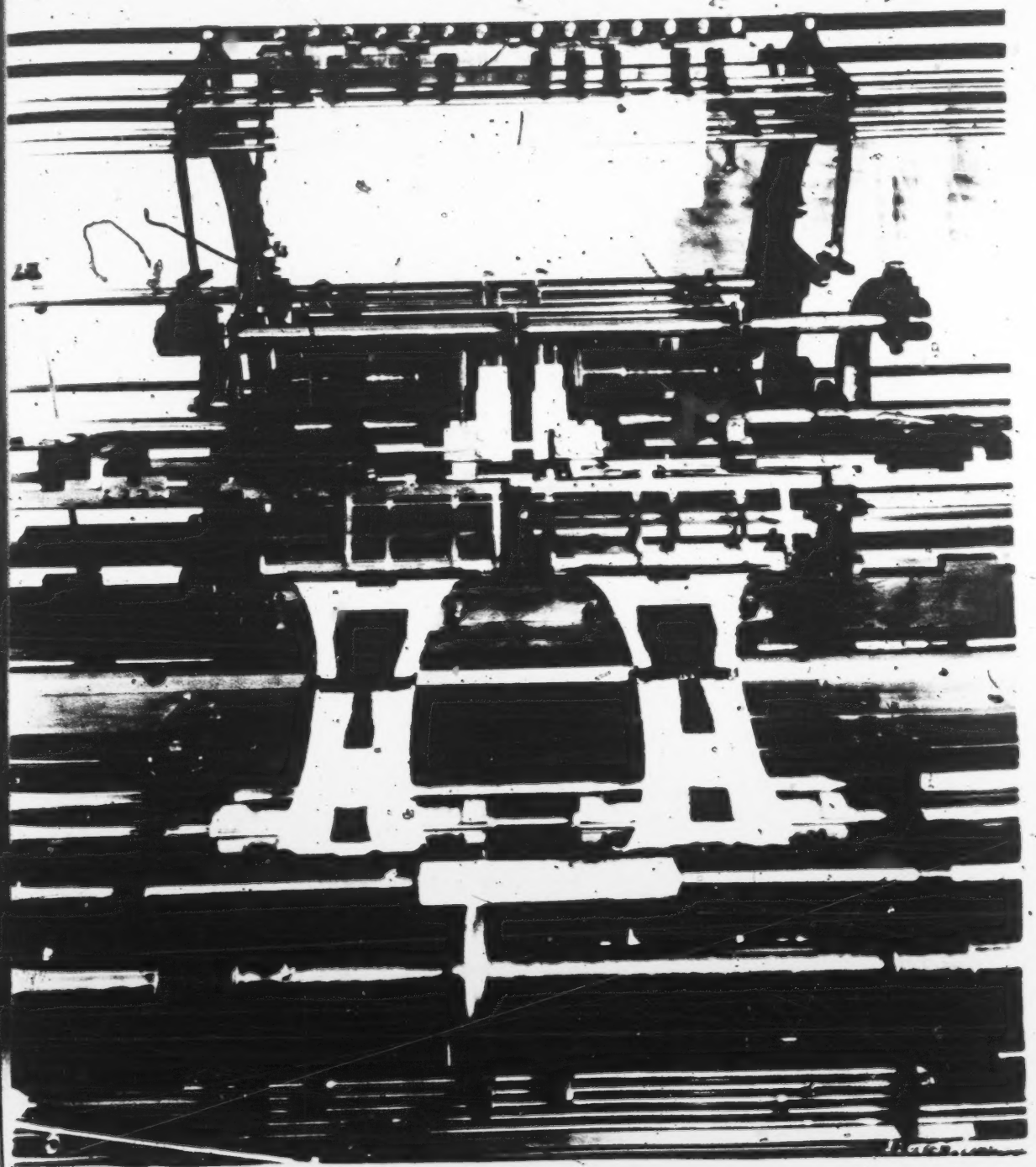

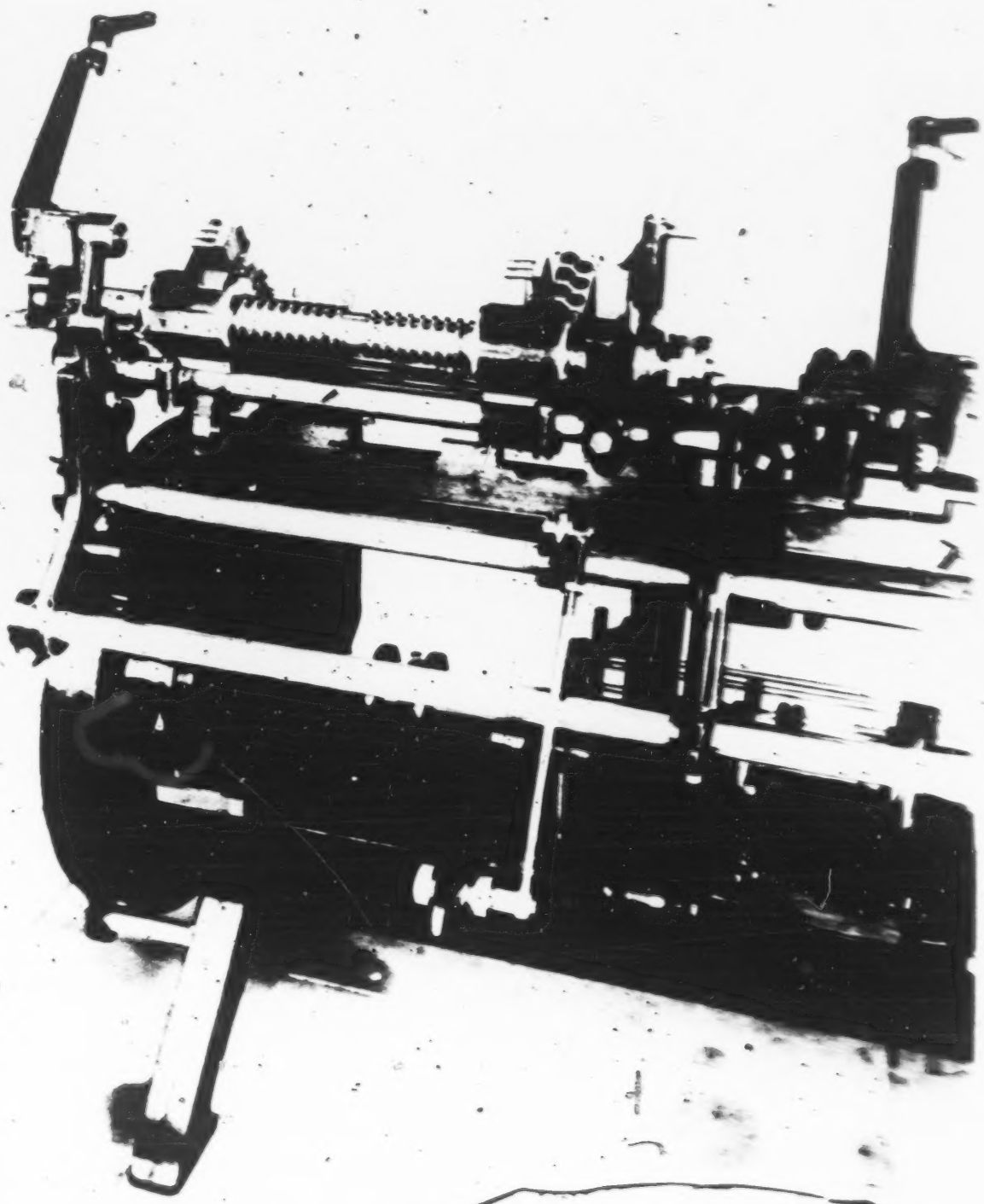

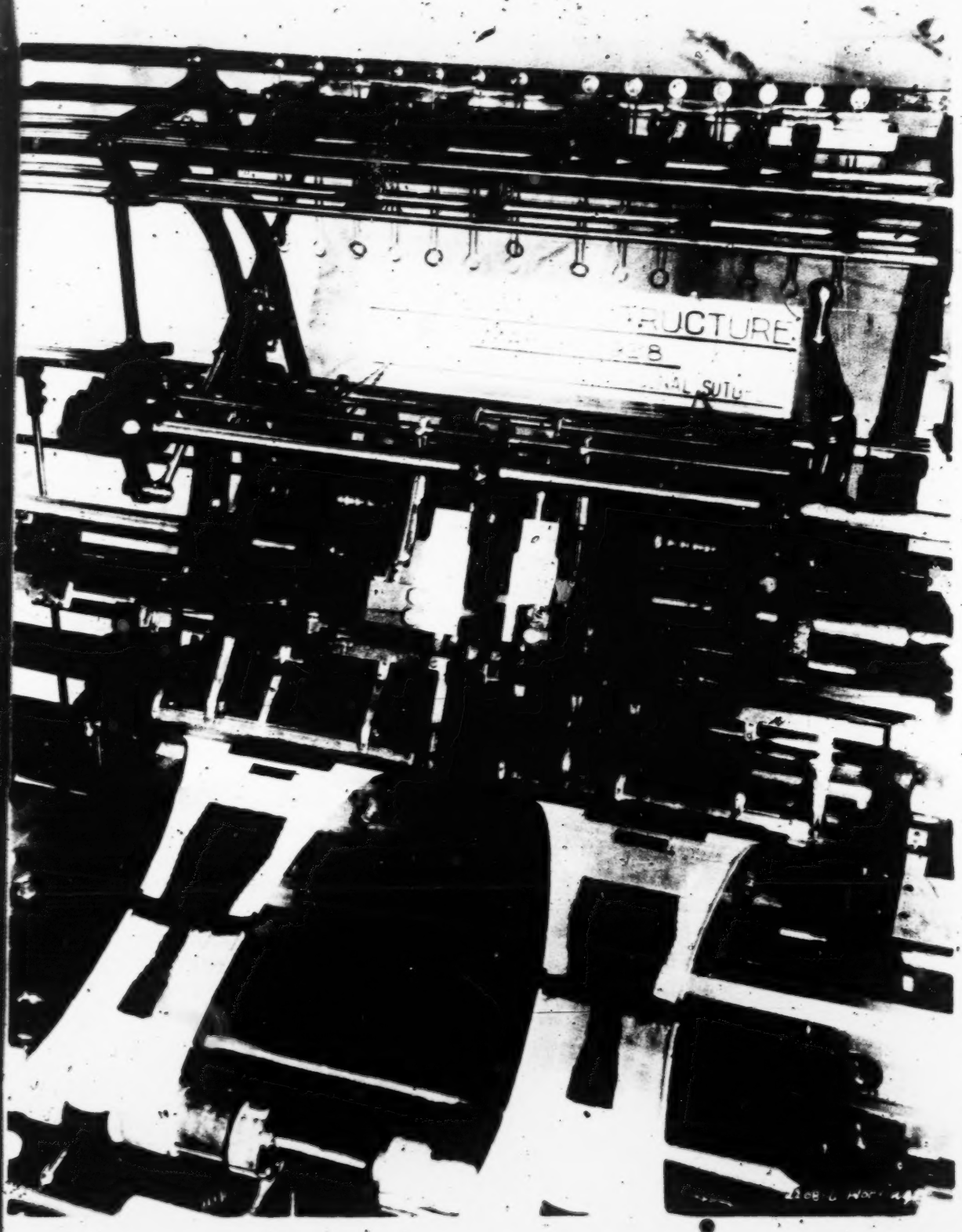
RUCTURE
8

[fols. 876-877] IN UNITED STATES DISTRICT COURT FOR THE SOUTHERN DISTRICT OF NEW YORK

In Equity. No. 63-32

TEXTILE MACHINE WORKS, Plaintiff,

vs.

LOUIS HIRSCH TEXTILE MACHINES, INC., Defendant

OPINION, LINDLEY, D. J.

Plaintiff, manufacturer of full-fashioned hosiery knitting machines, brings this suit for infringement of Claims 1, 3, 14 and 15 of patent No. 1,713,628 issued May 21, 1929, to Schletter. Defendant, the American sales representative of a German manufacturer of knitting machines, sells the latter in America and manufactures and sells in America the specific attachments charged to infringe. Defendant denies validity and infringement. The patent in suit was held valid and infringed in Textile Machine Works vs. Hofmann, by Judge Avis in 4 Fed. Sup. 837, affirmed in 71 Fed. (2d) 973 (C. C. A. 3). The Supreme Court denied certiorari.

The patent in suit covers an attachment to be applied to a flat knitting machine of the Cotton type for making full-fashioned hosiery. Such a machine is complete in itself and is old in the art. The device of the patent, when added to the regular parts of such a knitting machine previously installed and in use, or furnished as part of the equipment of new machines. The "Cotton" machine manu- [fol. 878] factures full-fashioned hosiery and is distinguished from other old machines, of such types as circular and independent needle machines and others similarly designed primarily for the making of underwear.

The patent drawing illustrates only certain sections of the frame members of a knitting machine, but the specifications, description and claims indicate clearly that the patented device is to be attached to a complete, operable "Cotton" machine. In order to arrive at a correct understanding of the issues, some discussion of the Cotton machine is advisable. A typical example of such a machine shows sections for knitting 24 stocking legs at one time, the operations upon one section being duplicated simultaneously on all the others. There are some 12,000 needles.

All movement originates from and is controlled by one cam shaft. To add an attachment, performing additional functions requiring automatic operation, involves the location of additional power devices on the single cam shaft and raises the problem of synchronization of the attachment with other moving parts of the machine and avoidance of interference therewith.

Operating parts of the knitting machine include needles, sinkers, guides, carrier bars, stops and numerous other mechanical parts, all cooperating in a complete automatic machine. The yarn guides are mounted on reciprocatory carrier bars, running lengthwise of the machine, each bar carrying one guide for each knitting section. The total reciprocating movement of the bar is the width approximately, of a single section, so that the yarn guide may [fol. 879] be caused to traverse the entire width of the section and put into position the yarn to be utilized by the needles of that section in the knitting operation. Such reciprocation is accomplished by mechanism operated from the main cam shaft.

The limitation upon the lateral movement of the bars is automatically controlled by the end stops, which can be adjusted, automatically in order to change the stroke of the carrier bars, in one direction only. This operation is referred to because it is required in fashioning, or, otherwise speaking, the "narrowing" of the stocking to produce one approximately the shape of the human leg. "Narrowing" involves not only the adjustment of the end stops gradually to shorten the stroke of the carrier bars with their yarn guides, but also the operation of elements known as narrowing points, which pick up some of the outer loops of the fabric from their needles and transfer them to inner needles, thus "narrowing" the fabric. These narrowing points move both horizontally and vertically, the vertical movement being produced by slides, controlled by pawl and ratchet mechanism, operated from the main cam shaft.

Though there is in the machine a reversely-threaded spindle, which moves the slides, causing a vertical movement from side to side, this spindle should not be confused with one similarly described, constituting a part of the device of the patent in suit. The latter carries stops for controlling the reciprocatory movement of the carrier bars by cooperation with abutments placed at suitable positions.

Narrowing involves another operation, namely, the adjustment of the end stops to shorten the throw of the yarn guide [fol. 880] carrier bars. Further detailed description is not essential; but it is to be observed that the narrowing mechanism is a unit which constitutes a part of the old machine and that when the narrowing operation is completed the end stops and the slides are returned to their initial positions by the turning of the spindle by hand in a direction opposite to that in which they rotate in the narrowing operation. This is termed "racking-out".

The Cotton machine includes leggers and footers. It has as one of its attachments the so-called split sole attachment. It has long been in common use in making split-seams, and this function is referred to in the patent as being well known.

Schletter's attachment is a device to be added to the machine we have been discussing and intended to make possible other and additional results. Its essential parts are the reversely-threaded spindle, stops mounted thereon capable of being moved toward and from each other by rotation of the spindle in opposite directions. Ratchets are provided at the end of the spindle, adapted to turn the same in one direction or the other. With mechanical connection, it is possible to operate the ratchets by power from the main cam shaft. There is included a mechanism for determining which of the ratchets is to be operated, which in turn determines the direction of rotation of the spindle. There are two pattern chains, one of which determines the time of operation of the spindle, and the other, the direction of rotation. The means for operating the [fol. 881] ratchets, which need not be discussed fully, is mentioned in the patent as "pattern controlled means for determining the time of operation of the spindle." The mechanism for determining which of the pawls will engage the ratchet is described by the patentee as "pattern controlled means for determining the direction of rotation of the spindle." The stops shown in the device are a well known form of split-seam stop, having an undercut portion and capable of being oscillated, when an open or so-called "herring-bone" seam is to be formed. The claims relied upon are not directed to the specific form of stops shown, nor to split-seam stops as distinguished from splicing stops nor do the claims call for oscillating stops or include the

oscillating means as a part of the invention. The patentee expressly states that his concept is not limited to the use of these specific stops for this specific purpose.

I have mentioned some of the elements of the mechanism without attempting to create a mental picture of the combination. This I do not deem essential, in view of the record, which will be submitted to the court of review.

As pointed out, the device is intended to cooperate with a full-fashioned machine, to which it is attached; and its function is to provide means for fashioning such designs as clocks upon full-fashioned stockings, doing both reinforcing or splicing work and split seam work. This purpose, the patentee said, his device accomplished by an action, whereby "yarn-guides" can be accurately controlled to lay a yarn over a distance less than the full length of a [fol. 882] course being knitted, as for reinforcing or for so-called split-seam work, wherein sections of fabric are connected by suture seams. For this purpose I preferably employ opposed stops with conjoint controlling means, arranged to move them toward or from each incrementally, but any equivalent means or devices may be employed which will effect the purpose of the invention."

In the ordinary operation of the knitting machine, the yarn guides are controlled only by the end stops and lay the yarn over the full width of the fabric being knitted, that is, from selvage to selvage. In contrast, Schletter's purpose was to furnish accurate control for yarn guides which lay the yarn over a distance less than the full width of the fabric or less than the full length of the course being knitted. This section produces "reinforcing" or split-seam work. Reinforcing is the knitting of additional thread over a particular area of the main body of the fabric, producing in such area a double thickness. Splicing, as used by the patentee, refers to the same operation. "Split-seam work," according to the patentee, means inserting in the body of the stocking an area formed by separate thread or fabric, as distinguished from a reinforced area, involving a separate thread knitted in to reinforce the main body of the fabric. The two types of work are commonly known as reinforced or splicing and as split-seam or insert work.

In practical operation, certain of the carrier bars travel the full course of the fabric being knitted and are controlled by the end stops. When a clock is inserted, the carrier bar laying the thread for the insert is controlled by auxiliary

[fol. 883] stops, an abutment on the bar contacting at each end of the auxiliary stops with the inner face of one of the same. Simultaneously, other carrier bars for laying the thread on either side of the insert are controlled by the end stops at one end of their throw and by the auxiliary stops at the other, an abutment on the carrier bar striking against the end stops at one end of its route and on the outer side of one of the auxiliary stops at the inner end. During the knitting of the inserted portion, the position of the stop is adjusted automatically by the turning of the spindle to form a junction along zigzag lines inclined to the wales and courses of the web.

In making the reinforced or spliced clock, the thread forming the main body of the fabric is laid by yarn guides on carrier bars having the full stroke and controlled by the end stops. The thread for the reinforcement is laid by guides on other carrier bars, traveling less than the full width of the fabric and controlled by the auxiliary stops, which cooperate with abutments properly placed on the carrier bars.

These two operations are specifically referred to in the patent, but there is another type of operation properly referred to as selvage reinforcement, that is, reinforcing work commencing at the edge or selvage of the fabric and running in therefrom. As contrasted with insert and reinforced work, in areas removed from the edges, in selvage reinforcement, while the main yarn guide carrier bars are controlled by the end stops, the carrier bars with the guides laying the [fol. 884] yarn for the reinforcing portions are controlled between the end stops and the outer faces of the auxiliary stops. The inner margins of the reinforced portions can be made along lines extending diagonally to the direction of the wales and courses of the fabric, these lines extending diagonally inwardly and outwardly as desired, the adjustment of the auxiliary stops being accomplished automatically.

These various operations illustrate the availability and utility of the device when attached to a full-fashioned flat knitting machine in knitting stockings and include a large number of kinds of ornamental work, made desirable by the demands of the purchasing public.

Plaintiff claims that Schletter, by adding to the conventional control of the yarn guide carrier bars by the end stops, auxiliary stops for controlling certain of the said carrier bars, traveling less than the full course of the knit-

ting, said auxiliary stops being automatically adjustable to and from each other, their operation being automatically timed for proper synchronization with the end stops and other operating parts of the regular machine, gave to the full-fashioned hosiery machine a scope of operation not previously possessed, which permitted the making of ornamental inserts or split-seam work, ornamental reinforced designs, such as shadow clocks, and an ornamental reinforcement at the selvages on either legger or footer, in all the varied forms which these several kinds of work may take. This, it is claimed, he did by means of a comparatively simple attachment readily added to an old machine or made a part of a new one.

[fol. 885] The claims sued on are set forth in the margin, 1, 3, 14 and 15. "The straight knitting machine, with co-

---

(1) In a straight knitting machine having cooperating yarn guide carrier bars, a pair of opposed stops for certain of said carrier bars which have a stroke less than the full width of the fabric being knitted, and a reversely threaded spindle for moving said stops toward and from each other to vary the stroke of the bars controlled by said stops. (3) A device as in claim 2, said pattern controlled means being constructed and arranged to turn said spindle either to increase or to decrease the distance between said stops. (14) In a straight knitting machine, a set of yarn guide carrier bars for operating yarn guides traveling less than the full width of the fabric being knitted, a spindle having reversed screw threads, stops operated by said spindle, means for turning the spindle in either direction, pattern-controlled means for determining the time of operation of the spindle, and pattern-controlled means for determining the direction of rotation of the spindle. (15) In a straight knitting machine, a set of reciprocating yarn guide carrier bars including bars having a stroke less than the width of the fabric being knitted, pair of stops for said guides, a reversely threaded spindle extending lengthwise of the machine, the respective stops being connected to the reversely threaded portion of the spindle for moving the stops simultaneously toward and from each other, pattern controlled means for determining the time for such movement, and correlated pattern controlled means for independently determining the direction of such movement.

operating yarn guide carrier bars," is the conventional Cotton machine for full-fashioned hosiery. The opposed "stops for certain of the carrier bars" are the auxiliary stops previously mentioned. By limiting the stroke of the carrier bar at each end of its travel, they make possible the split seam work mentioned. These auxiliary stops also act as opposed stops in making reinforced or shadow clock work. "The reversely threaded spindle for moving toward and from each other to vary the stroke of the bars controlled by said stops" implies automatic operation in both directions in accordance with the specifications of the patent. Claims 3 and 14 cover the same combination as claim 1. Claim 15 is somewhat more specific.

Defendant contends that plaintiff's commercial device [fol. 886] does not follow the patent because, first, solid non-oscillating stops have been substituted for the oscillating stops shown in the patent drawing, and, second, the timing and selecting mechanisms in the commercial form are operated by a single pattern chain instead of two as shown in the patent. While the patent shows one specific form of stop well known in the art, that is, a stop with an undercut portion, capable of oscillation, the patent, in its specifications, clearly indicated that the inventor did not intend to limit his alleged invention to these specific stops. He said: "My invention, however, is not limited to the use of these specific stops for this specific purpose, but they may be used for all purposes for which stops are used." Similar language appears elsewhere in his specifications. I am convinced that in any substitution in the device actually produced of solid stops for undercut stops, there is no material departure from the patent, but rather an adherence to its teaching. In other words, under the evidence, stops and their functions were well known. The patentee did not invent a new form of stop, but his idea, as I understand it, was to control the movement of stops laterally in the machine. This he did by his reversely-threaded spindle and automatic reversing means in conjunction with the regular control of the full-travel bars by the end stops. In making the open or herring-bone split the undercut stops were oscillated. In making the closed split, the oscillating means were rendered inoperative, without oscillation, just as if they had been solid stops. The evidence is that the undercut stop was provided, not only with the oscillating means but also with [fol. 887] means for putting the oscillating mechanism out

of operation, so that the stops could be used either as solid stops or as oscillating stops. The practice of utilizing the stops in their two capacities is apparently well known in the art, and makes possible the closed split seam as well as splicing work. I think a fair interpretation is that the specifications of the patent not only disclose the alternative use of solid stops without the undercut but further that the specific form of stop with its oscillating means, involved a disclosure to those skilled in the art of a well known form of stop, to be oscillated in making the open split and to be disconnected and not oscillated in making a closed split or for reinforcing or splicing work. Apparently Schletter preferred to make an open split, in vogue in his time, but the device which he disclosed was capable of use in the manner known to the art in making closed splits, and the fact that when the plaintiff commercialized its device it omitted the means for oscillating the stops, the open split being no longer in vogue, involved no departure from the patent.

Plaintiff has substituted a single pattern chain for controlling both the timing and selecting mechanisms in place of the two separate chains shown in the patent, but the one chain, by virtue of the mechanism provided, performs the function of both the former chains. The device exemplifies elimination of two chains, replacement with one performing the same function. The claims of the patent are not so framed in describing the timing and selecting mechanisms as not to include such simpli-cations. Equivalency is clear [fol. 888] Commercial success followed the production of the attachment, which now forms an essential feature of substantially all flat knitting machines. Testimony of various manufacturers fully establishes this fact. The German machines, if not equipped with such attachment, are supplied therewith by the purchaser.

Defendant contends that Schletter was anticipated, and counsel relies upon thirteen patents cited in Textile Machine Works v. Hofmann, supra, and now cites twelve additional patents.

The claims of the patent in suit cover in the full-fashioned flat knitting machine, with its provided reciprocatory carrier bars, a combination of full travel thread bars, controlled by the end stops short travel bars, which cooperate with the full travel bars, in making designs on the hosiery, auxiliary stops for controlling the short travel bars, the reversely-threaded spindle, for moving the stops toward and from

each other, automatic means for moving the auxiliary stops in either direction, means for timing the operation of the spindle and means for selecting the direction of rotation of the spindle.

Of the twelve patents cited here for the first time, the following: Laue and Timaeus (German) No. 21,332 of 1881; Black (British) No. 13,905 of 1887; Rowlet (U. S.) No. 500,953 of 1893; Chipman (U. S.) No. 1,163,970 of 1915; Mather (British) No. 7,476 of 1837; Roe (British) No. 1,991 of 1869; Willat, et al. (British) No. 573 of 1871; Claringburn (British) No. 7,068 of 1891; Kilbourne (U. S.) No. 19,370 of 1856; Lieberknecht (German) No. 117,153 of 1900; De Pass (British) No. 10,405 of 1884; Oesterreich (U. S.) [fol. 889] No. 1,644,688 of 1927, relate to machines which have no auxiliary carriers but employ merely full travel carriers. I cannot find in any of them any pertinent relation to the subject matter of the patent in suit. Practically all of them relate not to an attachment for the Cotton machine, but to one of entirely different type, the independent needle machine, without reciprocating carrier bars. For these as well as other reasons appearing in evidence, these patents clearly do not anticipate.

Lieberknecht (German) No. 117,153 has to do only with the control of full travel carrier bars. Under his construction no designs can be made by the machine. The device supplies in a knitting machine of the Cotton type for the ordinary end stops of the latter, that patentee's equivalent. De Pass (British) No. 10,405 is intended to make designs upon hosiery, but by means entirely alien to that employed in the instant patented device. It does not involve the control of reciprocating carrier bars, but employs the carrier control of the independent needle machines. This patentee proposed a specific form of design, and his device is entirely limited to that, having no capability for the various kinds of designed work of which the attachment in suit is capable. There are in most of the prior art patents thus far considered no reversely-threaded spindle or otherwise.

Oesterreich, No. 1,644,688, discloses a drum attachment for doing design work on the Cotton machine. There is here again no reversely-threaded spindle, and consequently no automatic mechanism for controlling such spindle. The patent covers an attachment for producing designs, but such

[fol. 890] productions follow a process entirely different from that of Schletter.

The Chamberlain publication, which is likewise new in this case, refers to a reversely-threaded spindle and to use of same for reducing or increasing the traverse of yarn guides. Plaintiff does not contend that the patent in suit covers such device. The article contains no teaching of the use of a reversely-threaded spindle in the manner of Schletter or to accomplish his purpose.

There remain thirteen patents cited, which were before the court in the Hofmann case. That suit was defended by the same counsel for a different client, and the president of the present defendant attended the trial of that case,—testified therein and assisted in the defense. The defendant contributed to the defense of the former suit, and the defendant in the former suit is contributing to the defense of this suit. These facts bring the present case very nearly within the doctrine of res adjudicata and though it may be that not all of the elements of that doctrine necessary to an estoppel by judgment exist, so far as the prior art relied upon in the former case is concerned, this trial is in the nature of a rehearing of the evidence heard in the prior suit in the district court, the decree of which was affirmed by the Circuit Court of Appeals for the Third Circuit. This court is loath to rehear issues previously decided by a court of coordinate jurisdiction, whose decree has been affirmed by the court of review. However, in the absence of applicability of the doctrine of res adjudicata, present defendant has a right to a full hearing of its defense.

[fol. 891] Claringburn (British), No. 4967, has to do with a Cotton machine so modified as to narrow the fabric at the selvage or at some distance in from the selvage, the purpose being to provide ladies' garments with gores or pockets. Claringburn contains no reversely-threaded spindle; has nothing to do with carrier rod control and pertains only to narrowing, which is old. The spindles may operate in opposite direction, but not in order to position auxiliary stops or otherwise except to produce narrowing.

Sowter, No. 478,527, comes within the same classification. He was dealing with narrowing.

Lieberknecht, No. 981,663, shows a reversely-threaded spindle for controlling the travel of yarn guide carriers, the purpose of which is to reduce the shocks of blows incident to the striking of the carrier bars on the stops. The

device relates solely to the control of full travel carrier bars and lacks entirely auxiliary stops for controlling the short travel bars. The spindle is automatically operated in one direction only and in the other by hand. The device will not accomplish Schletter's purpose.

Woodward, No. 19,627, contains only the regular stops for full travel bars. There are no auxiliary stops; no short travel bars, and the reversely-threaded spindle is not that of Schletter. Defendant offered testimony that certain changes might be made in the device whereby it might be adapted to produce one of the types of work covered by Schletter's patent. I do not believe the modified device follows the teaching of Woodward. But more than that, it is not sufficient to constitute an anticipation that the device might by modification be made to accomplish the function [fol. 892] performed by the patent in suit, if it were not designed so to do by its maker or adapted when actually used, for the performance of such functions. Topliff v. Topliff, 145 U. S. 156.

Gee, in his Patent No. 1,014,753, devised an attachment for making reinforced or spliced designs away from the selvage. He controlled his short travel bars by fixed stops, which have no movement in a longitudinal direction, as in Schletter. The attachment is capable of doing only one kind of work, and only one design can be achieved by the use of any one form of pattern abutment. There is no reversely-threaded spindle. The device cannot be employed for split seam or insert work, and has certain other defects not necessary to be considered.

Landenberger, No. 1,134,749, is a drum device similar to that of Oesterreich. The drums are operated in one direction only, and the device fails to meet Schletter's claims, as there are no auxiliary stops movable automatically toward or from each other and no reversely-threaded spindle so to move the stops. This attachment has been practically superseded by the attachment of Schletter. Drum devices are used to some extent at the present time, but they follow teachings different from those of Schletter.

Schletter, No. 1,198,482 is very similar to that of the Landenberger's device just considered. It was intended to make the pointex heel reinforcement and utilized for that purpose, a drum device. It fails to anticipate, for the same reason that Landenberger fails.

Cecka, No. 1,180,568 covers a device for making reinforced portions in the medial parts of the fabric, that is shadow [fol. 893] clock work. He has no other purpose in mind, and the device fails to comprehend the concept of Schletter.

Cecka, No. 1,217,411 has to do with reinforcement of the selvage. It is similar to Cecka Patent No. 1,180,568 and fails to meet Schletter. The Examiner allowed Schletter's claims over this reference. These two patents are of especial interest in this case because of the fact that they represent attempts made by the defendant's associates to solve at least a part of the problems Schletter coped with. The devices were crude and of no practical merit, but are of some weight upon the question of invention by Schletter.

Zwicky, No. 1,608,285, employs a reversely-threaded spindle but one entirely different from that of the patent in suit.

Cotton, British No. 208,362, utilizes the reversely-threaded spindle as a one-way device for controlling auxiliary stops to make the pointex heel. It is similar to Gotham and Kayser, in evidence under prior uses. The spindle operates in one direction only and lacks the automatic reverse and other mechanism included in Schletter. Furthermore it appears that Schletter's date of invention was prior to that of Cotton.

Lamb and Noon, British No. 15,129, covers a machine for making split seam designs of a particular pattern. There is no carrier bar which carries a guide for laying thread across the full length of the fabric. There is no reversely-threaded spindle for controlling auxiliary stops. It is suggested that with certain changes Lamb might accomplish something other than what he claimed. But the suggested [fol. 894] changes involve supplying new elements and building a new combination.

Muller, in No. 1,564,438, was dealing with an independent needle machine. He employed no reciprocating carrier bars, no combination of short travel bars and full travel bars with fitting automatic control. Muller was not dealing with full-fashioned machines. The function of his spindle was not to control auxiliary stops, as in plaintiff's combination, but to perform another function. Muller could not accomplish the various types of work contemplated by Schletter. Furthermore the reference is not sufficiently early to anticipate Schletter's invention.

Gotham and Kayser employ attachments for making pointex heels; involving a single kind of selvage edge reinforcement which was used for some years to make pointex heels. Apparently these devices were equivalent to that illustrated in the Cotton British patent. They are no longer in use, for the reason that the Schletter attachment has superseded them because it will make, not only pointex heels, but various numerous types of ornamental work. These prior uses involve one way devices. The threaded spindle is operated by mechanism in one direction only and is racked out by hand. They contemplated no automatic operation in both directions, no selective or reversing mechanism, and the auxiliary stops are not utilized as opposed stops.

The Nussbaum machine was used in the manufacture of underwear and bathing suits. It was not adapted to make full-fashioned hosiery, but utilized regular fashioning screws or spindles at the opposite ends of the machine and the regular end stops to control the travel of short travel [fol. 895] bars, laying in the thread for designs, thus ornamental designs. In this device there were auxiliary stops at each end of the machine to do the work which would be done ordinarily by the regular end stops. It was impossible with this machine to achieve the purpose of Schletter. It could make garments with straight selvages only. The device lacks the essence of the Schletter invention, namely, an attachment to be added to the regular full-fashioned machine, providing auxiliary stops, automatically controlled, additional to and co-operating with the regular end stops on the machine, so that while the machine is knitting full-fashioned hosiery, short travel bars are automatically controlled to lay in the yarn necessary to make the desired ornamental designs.

Some of these patents have to do with control of narrowing points; others with control of full travel bars; others are single purposed devices. Others show specially designed machines but do not relate to an attachment for full-fashioned hosiery and others relate to independent needle machines, not involving the control of carrier bars. A new combination cannot be anticipated by piecing together the various elements from disconnected patents. Thus in Davis Mfg. Co. v. Levin Bros., 8 Fed. (2d) 972 at 976, the Court of Appeals said:

"It is familiar doctrine in the law of patents that, after an invention, an infringer may not piece together from a

number of disconnected patents in the same or other arts a combination of features which would render the patented combination invalid; particularly when there is added a [fol. 896] new and distinctive efficiency as the result of the combination made by the patentee as distinguished from combining a number of old elements, all functioning as before without that new and distinctive result."

See also J. L. Owens Co. v. Twin City Separator Co., 168 Fed. 259; at 265 (C. C. A. 8th); Black & Decker Mfg. Co. v. Baltimore Truck Tire Ser. Corp., 40 Fed. (2d) 910 at 912, 913 (C. C. A. 4th); Wisconsin-Minnesota Gas & Elec. Household Co. v. Hirschy Co., 28 Fed. (2d) 838, at 841 (C. C. A. 8th); Bragg-Kliesrath Corp. v. Farrell, 36 Fed. (2d) 845, at p. 849 (C. C. A. 2nd); Bassick v. Larkin Co., 19 Fed. (2d) 939, 940.

I am of the opinion that none of the prior art or uses cited anticipate Schletter.

It is contended that no invention was achieved, but after careful consideration of the evidence, I am of the opinion that Schletter accomplished invention. Instead of the old combination intended for one purpose, he brought about a new attachment adapted not only for selvage reinforcement of any desired form, but as well for split seam work, fancy insert work, away from the selvage, and spliced designs such as shadow clock work. He thus provided for the full-fashioned hosiery machine, for the first time in the history of the art, a single, efficient new attachment for accomplishing a wide variety of work never before accomplished by any single device. In dealing with a new combination, the question of patentable invention turns not merely upon the [fol. 897] question of the extent and nature of the mechanical changes, but rather upon the question of novelty of function and result. The addition of mechanism for accomplishing the purpose of the new combination must be preceded by the conception of the purpose and the recognition of the availability of the old device, with the addition of the new necessary mechanism, for the accomplishment of the new purpose and added functions. By adding the automatic reverse, with the necessary operating, selecting and timing mechanisms, Schletter produced a new combination, giving to the auxiliary stops functions which they did not possess in the old pointed heel device and producing an entirely new result. He turned a device intended for a single pur-

pose into one of general utility, opening up a whole field of new uses, which those familiar with the old attachments had not conceived. Such steps as this show invention. Diamond Rubber Co. v. Consolidated Co., 220 U. S. 428; Temco v. Apco, 275 U. S. 319; Bragg-Kliesrath Corp. v. Farrell, 36 F. (2d) 845; Thropp & Sons Co. v. De Laske, 226 Fed. 941, 947.

Defendant has insisted that Schletter's device is inoperative. Its point is that while the spindle, the means for operating the same and the timing and selecting mechanism are all clearly shown and described, including a pattern chain, which operates the selective mechanism, and a pawl which moves the pattern chain, there is obscurity with respect to the lever connection by which the pawl is actuated from the main cam shaft. To support this contention, is the testimony of an expert witness to the effect that he cannot determine from the patent drawing the pawling mechanism for the chain. But this witness finally said, on [fol. 898] cross examination, that the specifications disclose that the lever for actuating the pawl was intended to be operated by the cam shown in the drawing. His final position was that the only thing missing from the patent drawing was the arm connecting the lever at the front of the machine to the pawl at the rear. The connection is not bodily shown in the drawing, but it seems obvious to the Court that anyone familiar with drawings, reading the specifications, would know and appreciate the exact form of the connection desired and intended. I am of the opinion that patentee has described his invention in such a manner as to meet the requirements of Revised Statute, Sec. 4888.

Patents are never struck down by reason of trivial defects which do not prevent those skilled in the art from putting the device into practice. That the alleged defect relied upon by defendant here is of such trivial character seems too clear to require further comment. Webster Loom Co. v. Higgins, 105 U. S. 580; Sun Ray Corp. v. Bellous, 49 F. (2d) 886, 887; Bickell v. Smith Hamburg-Scott Co., 53 F. (2d) 356.

What has been said in this connection applies with equal force with regard to failure to show in the drawings narrowing cams which are an essential part of a knitting machine.

From a careful consideration of the evidence, therefore, I am of the opinion that Schletter achieved invention; that

he is not anticipated; that he has met the requirements of the statute in his description of his invention and that his patent discloses no inoperative defects.

In the alleged infringing device, a single chain for controlling the timing and selecting mechanism has been sub- [fol. 899] stituted for the two pattern changes of the patent. This is another way of saying that the defendant here, as did the defendant in the Hofmann suit, has followed plaintiff's commercial form of device, which the Court has previously said is not a departure from the teaching of the patent. The substitution of one chain with additional buttons, for two chains, accomplishing the same purpose as two chains, does not prevent infringement, just as it is no departure from the teaching of the patent.

Defendant contends also that in its device it has provided stops which are of special improved character, adapted to make a two needle split seam, whereas in Schletter the split seam must be a four needle split, which is alleged to be less desirable than the other. I do not understand that the patent, in the claims herein involved, is limited to any particular form of split seams. Rather the claims are directed, not to any specific form of stop but to a combination of stops of well known character, either for split seams or splicing and controlling and operated in a particular manner in connection with the parts of a full-fashioned knitting machine to bring about a wide variety of designs on hosiery. I do not conceive that infringement can be escaped by the use of a form of stops which permit the making of a particular seam which the defendant claims is more desirable than the specific form shown in the patent, where various forms including the one being considered, are claimed. It appears that defendant's attachment may be utilized to make the four needle split and for splicing exactly in the same manner and form as the plaintiff's commercial attachment. In the end what defendant does [fol. 900] is to employ an attachment embodying plaintiff's combination with an added device for raising and lowering pin stops in order to adapt the device to a particular form of split seam. Such addition, utilized only with plaintiff's combination, cannot relieve defendant of the charge of infringement. Walker on Patents (6th Ed.), p. 496; Sec. 409; Temco Electric Co. v. Apco Mfg. Co., 275 U. S. 319; Mabina v. Grisman, 20 F. (2d) 406; Barber v. Otis Motor, 231 Fed.

755, 762; Stabler v. Riverside Heights Assoc., 205 Fed. 735, 739.

Furthermore, inasmuch as the added connection is adapted to be put out of operation and the pin stops used as ordinary split seam and splicing stops, the device accomplishes exactly the result of Schletter. A machine that infringes part of the time is an infringement, although it may at other times be so operated as not to infringe. Wright Co. v. Herring-Curtis Co., 211 Fed. 654, 655 (C. C. A. 2nd); Westinghouse Co. v. Precise Corp., 11 Fed. (2d) 209. I find, therefore, nothing in the defendant's device that excuses it from the charge of utilization of the combination of the Schletter patent.

I might with propriety have rested my decision largely upon the prior adjudication in the Third Circuit, for a strong presumption arises from such previous decision. Thus, the Court of Appeals for this Circuit, in Gormley & Jeffery Tire Co. v. U. S. Agency, 177 Fed. 692 (C. C. A. 2d) said:

"The importance of securing uniformity in the law as administered in the several circuits in patent causes is so [fol. 901] great that a decision of a court of co-ordinate jurisdiction should be followed by this court in every case where the questions presented can fairly be regarded as doubtful."

See also Warren Bros. Co. v. City of N. Y., 187 Fed. 831, 835 (C. C. A. 2d); Adt. v. Kirstein Sons Co., 259 Fed. 277, 278; McLaren Products Co. v. Cone Co., 7 Fed. (2d) 120, 128; Rousso v. Elco Cabinet Co., 28 Fed. (2d) 300. But I have not felt satisfied to rely solely upon the strong presumption arising from the earlier adjudication. I have considered not only the evidence identical with that submitted in the prior litigation but in addition new evidence. Only by so doing have I felt that the Court's obligation to the defendant can be fully performed.

There will be a decree of validity of the claims sued upon, infringement by defendant and a reference to the master for an accounting for damages. Proper form may be submitted.

Entered this — day of February, A. D. 1936.

Walter C. Lindley, Judge.

[fol. 902] IN UNITED STATES DISTRICT COURT FOR THE SOUTHERN DISTRICT OF NEW YORK

[Title omitted]

Findings of Fact and Conclusions of Law

FINDINGS OF FACT

1. Plaintiff is a Pennsylvania corporation, and defendant is a New York corporation.

2. Plaintiff owns by mesne assignment, Letters Patent of the United States No. 1,713,628, issued May 21, 1929, to Schletter & Zander, Inc., for an attachment for flat knitting machines, and of all rights of recovery for infringement thereof.

3. The said patent was before the District Court in New Jersey and the Court of Appeals of the Third Circuit in the case of Textile Machine Works vs. Alfred Hofmann, Inc., in Equity No. 4219, and was held valid and infringed as to claims 1, 3, 14 and 15 thereof.

4. The device shown and described in the patent in suit is an attachment for full fashioned knitting machines for knitting hosiery, whereby the knitting machine is adapted [fol. 903] for knitting stockings provided with reinforced designs or so-called split-seam designs in any desired portion of the stocking at or between the selvages.

5. The attachment of the said Letters Patent has been manufactured and sold in large quantities by the plaintiff; the device has been commercially successful; has gone into general use on full fashioned knitting machines throughout the United States, and has been received and recognized in the knitting industry as a valuable addition to the full fashioned knitting machine.

6. Schletter, upon whose application the said Letters Patent were granted, was the original, first and sole inventor of the said attachment.

7. The invention of the attachment was made and completed by the said Schletter prior to June 19, 1922, the said invention having been reduced to practice prior to said date by embodiment in a full sized operative machine.

8. Said Schletter filed his original application for a patent for the said device on June 19, 1922, which application, apparently, without the intention of the inventor, subsequently became abandoned.

9. Following the making and completion of the invention, as aforesaid, there was no relinquishment or abandonment thereof by the said inventor, or surrender of the same to the public.

10. The patent discloses an operative and useful device. All parts essential to proper operation are disclosed in the [fol. 904] specification, or necessarily implied from the description.

11. The disclosure of the patent is sufficient to enable any person skilled in the art to which the machine appertains to make, construct and use the same.

12. The combinations set forth in claims 1, 3, 14 and 15 of the said Letters Patent were novel. None of the prior art patents, or publications, or prior uses relied upon by defendant constitutes an anticipation.

13. The evidence of the prior art as contained in the record fails to show that the attachment covered by claims 1, 3, 14 and 15 of the patent was obvious to those skilled in the art, or that it involved ordinary mechanical skill, falling short of invention.

14. Since the grant of the patent and prior to the filing of the bill of complaint herein, defendant has, without consent of the plaintiff, sold within the United States full fashioned hosiery knitting machines, leggers and footers, provided with attachments, the attachments for such machines being identified in the record by photographs marked herein "Plaintiff's Exhibit 2."

15. Defendant's said attachments, identified in the photographs Plaintiff's Exhibit 2, embody and employ the several elements recited in claims 1, 3, 14 and 15 of the said Letters Patent No. 1,713,628, and each of them, said elements being combined in substantially the same way, with the same [fol. 905] mode of operation, and accomplishing the same results as in the patent in suit.

16. On or about the 30th day of June, 1930, plaintiff notified the defendant of plaintiff's said patent and of de-

fendant's infringement thereof by the sale of the aforesaid attachments, and after the receipt of such notice, defendant continued, within the United States, to sell the said attachments without the consent of plaintiff.

CONCLUSIONS OF LAW

1. The Letters Patent of the United States No. 1,713,628 issued May 21, 1929, for attachment for flat knitting machines, are good and valid in law as to Claims 1, 3, 14 and 15 thereof.

2. The attachments sold by the defendant, Louis Hirsch Textile Machines, Inc., and identified in the record by the photographs "Plaintiff's Exhibit 2," embody the invention or inventions set forth in Claims 1, 3, 14 and 15 of said Letters Patent, and each of them, and defendant has infringed the patent as to said claims, and each of them, by the unauthorized sale, within the United States, of the said attachments.

3. Plaintiff is entitled to a writ of permanent injunction, enjoining defendant from the further sale of the aforesaid attachments and any further infringement of the plaintiff's patent in suit.

4. Plaintiff is entitled to recover from defendant, the profits and gains received by defendant and the damage [fol. 906] suffered by plaintiff by reason of the aforesaid infringement of the patent in suit and to recover its costs and disbursements of this proceeding, in accordance with the statutes and rules in such cases made and provided.

5. The findings and conclusions of the memorandum of the Court, adopted simultaneously herewith, are made a part hereof as fully as if expressly included herein.

6. Plaintiff is entitled to a decree as prayed.

Adopted and entered this — day of February, A. D. 1936.

Walter C. Lindley, Judge.

IN UNITED STATES DISTRICT COURT

[Title omitted]

PETITION FOR REHEARING

Now comes the defendant, Louis Hirch Textile Machines, Inc., and by its solicitors respectfully petitions this Hon-

[fol. 907] orable Court to grant a rehearing of this cause upon the following points and for the reasons hereinafter briefly stated:

1. The Court failed to consider or to render any decision in this cause with respect to the defense presented by the petitioner at the trial that claim 10 of the Schletter patent in suit is invalid on its face.

2. Although plaintiff herein sued only upon claims 1, 3, 14 and 15 of the patent in suit, the petitioner clearly had the right under its pleadings to challenge the validity of claim 10 of the patent in suit and to have the Court consider such a defense and to render a decision in the case with respect thereto.

With respect to the right of petitioner to challenge the validity of claim 10 of the patent, attention is called to the following authorities:

Seymour v. McCormick, 60 U. S. (19 How. 66);
Sessions v. Romadka, 145 U. S. 29: 36 L. Ed. 609;
Singer v. Walmsley, Fed. Case 12,900;
American Bell Telephone Co. v. Spencer, 8 Fed. 509;
Stutz v. Armstrong, 20 Fed. 843;
Hall v. Biddle, 27 Fed. 560;
Suddard v. American Motor Co., 163 Fed. 852

3. Claim 10 of the patent in suit is obviously invalid because it is misdescriptive, unsupported by the disclosure of the patent, and contrary to said disclosure, and such [fol. 908] invalidity is clearly apparent by a mere inspection and examination of the specifications and drawings of the patent.

4. Testimony given at the trial also conclusively shows that claim 10 of the patent in suit is invalid on its face. In this connection the attention of the Court is called to the testimony of plaintiff's expert witness, Meyer, during his cross examination (Record pp. 142 and 143) where he unequivocally admitted that the specifications and drawings of the patent did not disclose or describe any "pattern controlled means to tilt the stops" of the attachment of the patent, as is called for in said claim.

5. The plaintiff has admitted the invalidity of claim 10 of the patent, since the trial, by filing a disclaimer of said

claim in the United States Patent Office on January 18, 1936.

6. The failure of the Court to rule that claim 10 of the patent in suit is invalid seriously affects petitioner's rights in this suit for the following reasons:

(1) A ruling by the Court that claim 10 of the patent is invalid would preclude the plaintiff from recovering any costs in the suit in view of the provisions of Section 973 of the Revised Statutes.

(2) A ruling by the Court that claim 10 of the patent is invalid would also entitle the petitioner to a further ruling by the Court, in view of the provisions of R. S. 4917 and 4922, that the entire patent is invalid and that the [fol. 909] plaintiff was not entitled to maintain this suit because of its unreasonable neglect and delay in filing a disclaimer of said invalid claim.

(3) A ruling by the Court that claim 10 of the patent is invalid would entitle the petitioner to a dismissal of this suit in view of the provisions of R. S. 4917 and 4922 and the interpretation given said statutes by the United States Supreme Court in the case of Ensten v. Simon Ascher Co., 282 U. S. 455; 75 L. Ed. 453.

7. The failure of the Court to rule that claim 10 of the patent is invalid on its face and to hold that the entire patent in suit is invalid because the plaintiff has not complied with the requirements of the disclaimer statutes R. S. 4917 and 4922 also seriously affects the rights of the public at large.

It is therefore believed that in view of the facts and authorities above set forth the petitioner is entitled to a ruling by the Court upon its defense presented at the trial as to the validity of claim 10 of the patent in suit and that a rehearing on this point should be granted.

Darby & Darby, Solicitors for Defendant.

I hereby certify that I am counselor and solicitor for Louis Hirsch Textile Mechines, Inc.; that the foregoing petition is in my opinion well founded both in point of law and on question of fact and is deserving of judicial consideration; and that the same is not interposed for delay.

Walter A. Darby.

[fol. 910] IN UNITED STATES DISTRICT COURT

[Title omitted]

ANSWER TO PETITION FOR REHEARING

The Petition for Rehearing filed by Defendant seeks review of the contention made in Defendant's Brief that Claim 10 of the Schletter patent is invalid, and that a disclaimer should have been filed by the Plaintiff with respect to this claim at the conclusion of the trial, or shortly thereafter.

1. This question was raised and argued in Defendant's Brief, pages 87 to 89 under Point IV, entitled "The Patent is Invalid Because of Undisclaimed Invalid Subject-Matter" where Claims 7 and 8 were attacked, as well as Claim 10. Plaintiff answered this portion of Defendant's Brief in its Reply Brief, pages 26-27. For the convenience of the Court, these portions of Defendant's Brief and Plaintiff's Reply Brief are attached hereto and marked Exhibits 1 (a) and 1 (b), respectively.

Defendant, by its Petition for Rehearing, seeks review of a point by the Court which was fully presented to it in [fol. 911] the Briefs and before the Opinion was handed down, which Point the Court in awarding relief to the Plaintiff, necessarily considered to be without merit.

2. The question of the invalidity of the patent, because of unreasonable delay in filing a disclaimer, involves a special defense which must be pleaded. Zell vs. Bankers' Utilities Co., 77 Fed. (2d) 22; Burden vs. *Corning*, 4 Fed. Cases, 701 at 710, No. 2143; Worden vs. Searls, 21 Fed. 406. This is in fact what Defendant seeks, not merely a finding with respect to the validity of a claim which was not in issue. (See Section 6 of Petition.)

In the present case Plaintiff, as is stated in Defendant's Petition for Rehearing, paragraph 2, sued only on Claims 1, 3, 14 and 15 of the Schletter patent. Under these circumstances, the invalidity of claims not in suit and the necessity for a disclaimer thereof, if the questions can be properly considered by the Court, must clearly be specifically pleaded. The Court of Appeals for the Second Circuit, in Trussell Mfg. Co. vs. Wilson-Jones Co., 50 Fed. (2d) 1027 at 1030 refused to consider the validity of claims

not in suit "for neither the Answer, nor any Assignment of Error, raised it."

The Defendant realizing the fact that the defense must be specifically pleaded asserts in the Petition, paragraph 2 that under its pleadings it had the right to challenge the validity of Claim 10. An examination of the Answer and amendments thereto filed by the Defendant shows that no defense relating to the necessity of disclaimer in view of the alleged invalidity of Claim 10 was pleaded. For the convenience of the Court, copies of the Answer and amend-
[fol. 912] ments thereto are attached hereto and marked Exhibit 2.

Not only was there no notice of the defense in the Answer, or amendments thereto, but no reference was made thereto at any stage of the trial, and Plaintiff obviously had no opportunity to submit, or reason for submitting, evidence on any such issue.

It is not the practice of the Courts to pass on the validity of claims not in issue for any purpose, e. g., for the purpose of determining the necessity of a disclaimer with respect thereto. Gamewell Fire-Alarm Telegraph Co. vs. Municipal Signal Co., 77 Fed., 490; Sirocco Engineering Co. vs. B. F. Sturtevant Co., 209 Fed., 624; American Bell Telephone Co. vs. Spencer, 8 Fed., 509.

In Aluminum Colors, Inc. vs. United States Research Corporation, 7 Fed. Supp., 609, the Court refused to consider the necessity of a disclaimer with respect to a claim not in issue on Motion of Defendant after decision in the case had been rendered.

3. Point 3 of Defendant's Petition is denied by the Plaintiff. This matter has already been discussed in Plaintiff's Reply Brief (see Exhibit 1 [b]).

Under the conditions here, the necessity for disclaiming could not arise until there had been an adjudication that the claim is in fact invalid. The Plaintiff has the right to reply upon the presumption of validity as to the claim which resides in the grant of the patent. Ensten vs. Simon Ascher Co., 282 U. S., 445; Aluminum Colors vs. United States Research Corporation, 7 Fed. Supp., 609.

[fol. 913] 4. Point 4 of Defendant's Petition is also denied by Plaintiff. The inaccurateness of Defendant's assertion is to be seen from an examination of the Record, pages

142 and 143, referred to by Defendant. These pages are attached hereto and marked Exhibit 3 for the convenience of the Court. The witness, Meyer, did not admit that the tilting of the stops referred to in Claim 10 is not effected by pattern controlled means, as the claim requires, but merely stated that it is not effected by pattern chain control means. Further, it is obvious that the witness had in mind merely the auxiliary chains for controlling the auxiliary stops, and was not referring at all to the regular pattern chain of the machine which controls the shifting of the main cam shaft, which shifting in turn does effect the tilting of the auxiliary stops, as was pointed out in Plaintiff's Reply Brief. (Exhibit 1 [b].)

5. Point 5 of Defendant's Petition is denied as a matter of law. Permutit vs. Wadham, 13 Fed. (2d) 454; United Chromium, Inc. vs. International Silver Co., 60 Fed. (2d) 913; Lowell vs. Triplett, 77 Fed. (2d) 556; Bay State Optical Co. vs. Klein, 20 Fed. (2d) 915.

6. The Defendant is not accurate in its statements in Paragraph 6 of the Petition, since even a holding of invalidity of Claim 10 would not entitle Defendant to a dismissal of the suit. Defendant would have to establish unreasonable neglect and delay in the filing of a disclaimer, a special defense obviously not raised by the pleadings.

* * * * * * *

[fol. 914] It will be apparent that Defendant, by its Petition for Rehearing, merely seeks a re-argument of a point which was fully presented by the Briefs heretofore filed; and in accordance with the settled practice in such cases, it is submitted that the Petition should be denied.

Respectfully submitted, Howson and Howson, Attorneys for Plaintiff.

IN UNITED STATES DISTRICT COURT

[Title omitted]

ORDER DENYING PETITION FOR REHEARING

Defendant has presented to the court its petition for rehearing and the plaintiff has filed its answer in opposition

thereto. Upon reconsideration of the record and of the authorities cited, I conclude and it is ordered that the petition for rehearing be, and the same is hereby denied.

Entered this 21st day of March, A. D. 1936.

Walter C. Lindley, Judge.

[fol. 915] IN UNITED STATES DISTRICT COURT FOR THE SOUTHERN DISTRICT OF NEW YORK

In Equity. No. 63-32

TEXTILE MACHINE WORKS, Plaintiff,

vs.

LOUIS HIRSCH TEXTILE MACHINES, INC., Defendant

INTERLOCUTORY DECREE

This case came on to be heard and was argued by counsel, and thereupon, upon consideration thereof, it is

Ordered, Adjudged and Decreed

1. That Letters Patent of the United States No. 1,713,628, granted to Schletter and Zander, Inc., assignee of Richard E. Schletter, May 21, 1929, for Attachment for Flat Knitting Machines, are, as to claims 1, 3, 14, and 15 thereof, good and valid in law.

2. That the plaintiff, Textile Machine Works, is the sole and exclusive owner of the entire right, title, and interest in and to said Letters Patent No. 1,713,628, including all rights of recovery for infringement thereof.

3. That the defendant, Louis Hirsch Textile Machines, Inc., has infringed said Letters Patent No. 1,713,628 with respect to said claims 1, 3, 14, and 15 thereof, and has [fol. 916] violated the exclusive rights of the plaintiff therein by making and selling within the United States machines or attachments embodying and containing the invention of said Letters Patent as set forth in said claims 1, 3, 14, and 15; the said machines or attachments made and sold by defendant being more particularly referred to and described in the photographs, Plaintiff's Exhibit 2, and the stipulation of record referring to said photographs.

4. That a writ of injunction issue out of and under the seal of this Court, directed to the defendant, Louis Hirsch Textile Machines, Inc., perpetually enjoining and restraining the said defendant, its clerks, attorneys, agents, servants and workmen, and all claiming through or under them, and each of them, from directly or indirectly making, or causing to be made, using, or causing to be used, or selling, or causing to be sold, any machine or attachment embodying or containing the invention of claims, 1, 3, 14, and 15 of said Letters Patent, or either or any of said claims, and particularly the machine or attachments heretofore made and sold by said defendant as identified in the aforesaid Plaintiff's Exhibit 2 and stipulation.

5. That the plaintiff recover from the defendant, Louis Hirsch Textile Machines, Inc., the profits, gains, and advantages which the said defendant has received or which may have accrued to it by reason of defendant's said infringement, and the damages which the plaintiff has suffered by reason of said infringement, and that this cause be referred to , as Special Master, to ascertain, take, [fol. 917] state, and report to the Court an account of said gains, profits and advantages, and the said damages.

6. That the plaintiff do recover of the defendant its costs and disbursements of this suit to be taxed, and that the question of increase of damages, and all further questions, be reserved until the coming in of the Master's report.

Walter C. Lindley, U. S. District Judge.

——, 1936.

IN UNITED STATES DISTRICT COURT

[Title omitted]

PETITION FOR APPEAL

The above named defendant, Louis Hirsch Textile Machines, Inc., conceiving itself aggrieved, by the interlocutory decree entered herein on April 13th, 1936, does hereby [fol. 918] appeal from said decree to the United States Circuit Court of Appeals for the Second Circuit for the reasons specified in the assignment of errors which is filed herewith, and it prays that this appeal may be allowed and

citation granted directed to the above named plaintiff Textile Machine Works, demanding it to appear before the United States Circuit Court of Appeals for the Second Circuit to do and receive what may appertain to justice to be done in the premises; and asks that a transcript of the pleadings, proceedings, testimony, exhibits and orders, together with a copy of the opinion of this Court filed in this cause upon which said decree was entered, duly authenticated by the Clerk of the Court, be transmitted to the United States Circuit Court of Appeals for the Second Circuit under the rules and statutes in such cases made and provided.

Louis Hirsch Textile Machines, Inc., by Darby & Darby, Solicitors for Defendant.

Dated April 18, 1936.

IN UNITED STATES DISTRICT COURT

ORDER ALLOWING APPEAL

It is Ordered this 18th day of April, 1936, that the foregoing appeal be allowed.

Robert P. Patterson, United States District Judge.

[fol. 919] IN UNITED STATES DISTRICT COURT

[Title omitted]

ASSIGNMENT OF ERRORS

The defendant, Louis Hirsch Textile Machines, Inc., in the above entitled suit conceiving itself aggrieved by the decree entered therein on the thirteenth day of April, 1936, now appearing by its counsel and presents with the accompanying petition for appeal from said decree the following assignment of errors:

1. The Trial Court erred in entering a decree adjudging claims 1, 3, 14 and 15 of Schletter patent No. 1,713,628 to be valid.

2. The Trial Court erred in failing to enter a decree adjudging claims 1, 3, 14 and 15 of Schletter patent No. 1,713,628 to be invalid because of anticipation.

3. The Trial Court erred in failing to enter a decree adjudging claims 1, 3, 14 and 15 of Schletter patent No. 1,713,628 to be invalid for want of patentable novelty.

[fol. 920] 4. The Trial Court erred in failing to enter a decree adjudging the Schletter patent No. 1,713,628 to be invalid because of insufficient and inoperative disclosure.

5. The Trial Court erred in failing to enter a decree adjudging claims 1, 3, 14 and 15 of Schletter patent No. 1,713,628 to be invalid because of prior knowledge, public and commercial use by Gotham Silk Hosiery Company, Julius Kayser & Company, and/or Nussbaum Company.

6. The Trial Court erred in failing to enter a decree that the Schletter patent No. 1,713,628 is invalid because of abandonment of the invention.

7. The Trial Court erred in entering a decree holding claims 1, 3, 14 and 15 of Schletter patent No. 1,713,628 to be infringed upon by defendant's apparatus.

8. The Trial Court erred in failing to enter a decree adjudging that claims 1, 3, 14 and 15 of Schletter patent No. 1,713,628 had not been infringed upon by defendant.

9. The Trial Court erred in entering a decree awarding costs to the plaintiff.

10. The Trial Court erred in failing to enter a decree adjudging that Schletter patent No. 1,713,628 is invalid for failure of plaintiff to disclaim the subject matter of claim 10 of said patent before the suit was brought.

[fol. 921] 11. The Trial Court erred in failing to enter a decree adjudging that claims 7, 8 and 10 of the Schletter patent No. 1,713,628 are invalid.

12. The Trial Court erred in failing to enter a decree dismissing the bill of complaint.

Louis Hirsch Textile Machines, Inc., by Darby & Darby, Its Solicitors.

Dated April 18, 1936.

Citation, in usual form, omitted in printing.

[fol. 922] IN UNITED STATES DISTRICT COURT

[Title omitted]

STIPULATION AS TO CONTENTS OF RECORD

It is Hereby Stipulated and Agreed that the true transcript of record for the purposes of appeal shall contain:

[fol. 923] 1. Bill of complaint.
2. Answer.
3. Amendment to answer dated September 18, 1934.
4. Amendment to answer dated December 6, 1934.
5. Amendment to answer dated March 23, 1935.
6. Stipulation dated November 27, 1934.
7. Narrative statement of evidence at trial.
8. Plaintiff's exhibits as follows: Nos. 1, 2, 10, 15, 16, 18, 20, 24, 25, 28, 32, 33, 34, 35, 36, 37, 39, 48, 49, 50, 52, 53, 54, 56 and 57.
9. Defendant's exhibits as follows: B, C, D, E, F, H, I, L, M, N, Q, R, S, T, U, V, W, X, Y, Z, A-1, B-1, C-1, D-1, E-1, F-1, H-1, J-1, M-1, O-1, C-2, D-2, F-2 and L-2.
10. Opinion of Judge Lindley.
11. Findings of fact and conclusions of law.
12. Petition for rehearing.
13. Answer to petition for rehearing.
14. Order denying petition for rehearing.
15. Interlocutory decree dated April 13, 1936.
16. Petition for appeal and order allowing appeal.
17. Assignment of errors.
18. Citation.
19. This stipulation.
20. Stipulation as to the correctness of printed record.
21. Clerk's certificate.

It is Further Stipulated and Agreed that the following exhibits are to be treated as physical exhibits and produced in court at the argument of the appeal:

[fol. 924] (a) Plaintiff's exhibits as follows: Nos. 3 to 9 inclusive; 11, 12, 13, 14, 17, 19, 21, 22, 23, 26, 27, 29, 30, 31, 38, 40, 44, 51 and 55.

(b) Defendant's exhibits as follows: A, G, J, K, O, P, G-1, I-1, K-1, N-1, P-1, E-2, G-2, H-2, I-2, J-2, K-2.

It is Further Stipulated and Agreed with respect to Plaintiff's Exhibits 41 to 47, inclusive and Defendant's Ex-

hibits Q-1 to Z-1, inclusive and A-2 and B-2, that said exhibits need not be reproduced in the printed record herein, but that the corresponding exhibits which are reproduced in the printed record of the case of Textile Machine Works vs. Alfred Hofmann, Inc. (Plaintiff's Exhibit 3 herein) may be used in place thereof, and that the printed record in the present case shall have printed therein clear cross references as to the pages in the said record of Textile Machine Works vs. Alfred Hofmann, Inc. (Plaintiff's Exhibit 3) where said exhibits appear.

Howson & Howson, Attorneys for Plaintiff. Darby & Darby, Attorneys for Defendant.

Dated July 3, 1936.

So Ordered and the clerk is directed to certify the record in accordance with the foregoing stipulation without requiring any præcipe or any further approval by the Court or Judge.

William Bondy, United States District Judge.

Dated July 3, 1936.

[fol. 925] In United States District Court

[Title omitted]

Stipulation as to Record

It is hereby stipulated and agreed, that the foregoing is a true transcript of the record of the said District Court in the above-entitled matter as agreed on by the parties.

Dated September —, 1936.

Howson & Howson, Attorneys for Plaintiff-Appellee.
Darby & Darby, Attorneys for Defendant-Appellant.

[fol. 926] Clerk's certificate to foregoing transcript omitted in printing.

[fol. 927] UNITED STATES CIRCUIT COURT OF APPEALS FOR THE SECOND CIRCUIT. No. 163—October Term, 1936.

Argued Dec. 14, 1936. Decided Feb. 1, 1937.

TEXTILE MACHINE WORKS, Appellee,

v.

LOUIS HIRSCH TEXTILE MACHINES, INC., Appellant

Appeal from the District Court of the United States for the Southern District of New York.

Before L. Hand, Swan, and Augustus N. Hand, Circuit Judges.

Appeal from a decree of the District Court for the Southern District of New York holding valid and infringed claims 1, 3, 14 and 15 of Patent No. 1,713,638 issued on May 21, 1929, to Richard E. Schletter.

Samuel E. Darby, Jr., of New York City, for appellant.

Dexter N. Shaw, of Philadelphia, Pa., for appellee.

L. HAND, Circuit Judge.

This is an appeal from a decree holding valid and infringed claims 1, 3, 14, and 15 of a patent for an attachment to a "full-fashioning" knitting machine by which parts of the web may be reinforced with an extra thread, or varied by an insert of "split seam work." In "full-fashioning" machines the width of the web depends upon the traverse, or "throw," of the thread carrier which brings the thread to the needles; "fashioning," which means narrowing or widening the web, is accomplished by changing this distance. The mechanism by which this is made automatically to conform with the desired pattern, need not concern us except to say that the width of the web is the distance between two stops at the ends of the machine, less the length of "carrier bar" upon which the thread carrier is fixed. This difference measures the traverse of the "carrier bar," and thus of the thread carrier. The patented attachment is to control the "throw" of secondary thread carriers, feeding other threads to the needles and fixed upon their own bars. The "throw" of these carriers is limited by stops fastened upon the carrier bars and engaging other stops carried by

two nuts, which are in turn threaded upon a reversibly threaded screw shaft. When the "throw" of the secondary thread carriers is to be changed in any way these nuts must move along the screw shaft; and if the "throw" is to be widened or narrowed their distance apart must be increased or diminished, which can be done by rotating the screw shaft. The patent is concerned for the most part with the mechanism which rotates the screw shaft at the proper time and in the proper direction. It is impossible to give a complete description of it without the aid of drawings, but enough for the purposes of this controversy may perhaps be made to appear verbally. The screw shaft is actuated by the main power shaft and its proper periodicity and rotation are secured by two endless belts carrying buttons, set at intervals corresponding with the desired pattern. One of these belts determines when and for how long the screw shaft shall rotate; and the other, its direction. At one end of the screw shaft are oppositely toothed ratchet wheels, each actuated by a pawl normally kept in contact with its wheel by a spring. The shaft is rotated by the oscillation of these pawls through a system of rods, levers and cams, leading from the power shaft. As one of the buttons on the belt [fol. 928] comes into position, by this train both pawls begin to oscillate, and if each remained in contact with its ratchet, the shaft would merely idle back and forth through an angular variation of one notch. In order to throw one pawl out of engagement and gain any increment of rotation, a separate train is necessary, controlled by the second pattern belt, which lifts the proper pawl off its wheel when the right time comes. In this way the screw shaft separates or brings together the nuts whose stops engage the stops upon the carrier bars, and limit the "throw" of the secondary thread carriers.

The four claims in suit need not be set out. Numbers fourteen and fifteen are the most detailed; they specify as elements the screw shaft ("spindle"), with its nuts, pattern control for rotating it, and another pattern control for selecting the direction. The defendant's attachment, which is used upon "full-fashioning" machines, is in general of the same character, and all the claims will read upon it without any undue extension, although the trains employed are different. Verbally the only question that could arise is because the defendant used a single pattern

belt, on which one row of buttons rotates the screw shaft and the other selects the direction. That would scarcely avoid infringement; at any rate for argument we will assume that it does not, because we think the claims invalid anyway.

Schletter filed his original application in June, 1922, and though he abandoned it later, his invention stands as of that date. Some ten years earlier the art had devised an attachment to a "full-fashioning" flat knitting machine for the construction of a pointed heel; that is, the reinforcement of the heel by an added thread beginning at a point at either edge of the web and extending inward until it reinforced its whole width. As there are no re-entrant angles in such a pattern, obviously it was only necessary that the nuts should approach during the reinforcement. This was done by mounting them on a reversely threaded screw-shaft, and when the web was finished they were "racked out" by hand to their original position. We shall call this machine the "Gotham"; it would not have been available for Schletter's purpose as it stood, and it did not therefore literally anticipate his invention. But it certainly pressed very closely upon it, and left at best a slim margin for invention; nothing indeed but the train automatically to reverse the rotation of the screw shaft by the pattern belt.

In 1917 at the Nusbaum Knitting Company of Glendale, Long Island, an attachment was made and publicly used which supplied this element lacking in the Gotham machine, though it happened to be attached to a knitting machine for making sweaters, which was not "full-fashioning," because the web for a sweater is not narrowed from top to bottom. Therefore the stops of the rod of the main thread carrier could be fixed, for the "throw" of that carrier does not change. Nusbaum made over an old "full fashioning" machine, using the existing nuts as variable abutments for stops on the bars which carried the secondary thread carriers, and supplying a new thread carrier and bar for the main thread. This bar he supplied with fixed stops at the ends of the machine, so that its "throw" was constant. The result was substantially the same thing as the defendant's attachment. The single reversibly threaded screw shaft was made into two shafts, it is true; but each of these had twin ratchets oppositely toothed, and a pawl for each ratchet. A separate train led to each of these pawls from one of four

rows of buttons upon a single pattern belt. When a button passed beneath the bell crank leading to any pawl, the crank moved a rod which in turn threw a lever into the path of a cam upon the power shaft. The rotation of this cam oscillated a second lever which in turn raised and lowered the pawl and effected a notch by notch rotation of the screw shaft. As each pawl had its own train and was out of engagement when not in motion, no other selective mechanism was necessary. For symmetrical patterns only two trains would have been necessary.

The claims in suit do not incorporate the train which connects the pawls with the power shaft, and there are many differences between the defendant's train and that of the specifications; as many perhaps as between that and Nusbaum's. The patent cannot stand upon any detail of these connections, and indeed the plaintiff does not suggest that it should; if it is valid, it is either because of the novelty of the conception of putting Nusbaum's attachment upon a [fol. 929] "full-fashioning" machine, or because of the technical difficulties of executing that conception. Of the second possibility we can dispose at once. It is indeed quite possible that there were in fact obstacles enough to call for substantial inventive capacity, but if so, Schletter did not show how they were to be overcome. With a single exception, to be noted in a moment, he said nothing at all about how his attachment was to be put on. Thus he is involved in a not infrequent dilemma of inventors, who seek to incorporate a new element into an old combination. Either the working out of the conception was so plain that it required only common-place skill, or the specifications are insufficient because they do not give the necessary directions. It seems unnecessary to labor the point, and the question comes down to the exception. It is necessary in such machines that the reversible screw shaft shall not operate while the "fashioning" stops are moving. Schletter recognized this and provided against it (Figure 11, Specifications page 4, lines 4668). The record does not advise us as to how troublesome the difficulty was, and the claims do not embody it as an element. The plaintiff has not asked us to base the invention upon it; wisely, since the solution was one which could scarcely have foiled a competent mechanic who might learn by experience of the need. Finally, we cannot take seriously the objection that Nus-

baum had two oppositely threaded shafts and Schletter had one; the Gotham machine had long since supplied that step.

The plaintiff does not indeed rest so much upon these structural differences as upon the conceptual novelty of the combination, confirmed by a great vogue once it appeared. These were the reasons for its success in Textile Machine Works v. Hofmann (D. C.) 4 F. Supp. 837, affirmed 71 F. (2d) 973 (C. C. A. 3), and in the court below in this suit. Its argument follows familiar lines. If it was so easy to combine the earlier elements, why did the art wait so long? The need was not new; no technical obstacles had stood in the way; success was sure to bring substantial gains. The combination should have appeared much earlier, if it lay open to ordinary talent. We have ourselves often reasoned so, for the history of an art before and after the putative invention appears, is the best test when it is available. But it is a dangerous test to apply, and will lead one astray unless jealously watched. Here for example there were only five years at most between the appearance of Nusbaum and Schletter's filing date; that is not a long period, and there is no evidence that people had meanwhile turned their minds to the matter, such as is found at times in intervening unsuccessful patents. Again it is not shown that Nusbaum's attachment had become widely known. Though it was in "public use," that presupposes no real publicity; so far as appears, it made no impression on the art. Yet in estimating Schletter's invention we must assume that it was known to everyone. It does indeed seem as though clocking or other inserts in cheap hosiery, must have been desirable for a good while before 1922, but one can never be sure; industry is often extremely sluggish and there may have been technical or industrial reasons of which we do not know. Nor are we told by what means the attachment has achieved its success; for all that appears it may have come into strong hands, especially able to exploit it. These gaps in the evidence we are asked to fill in and make a conclusion contrary to the most imperious claims of commonsense; we are to hold that an art which knew how to reinforce "full-fashioned" webs without re-entrant angles, and straight edged webs with such angles, required some uncommon talent merely to conceive of combining the two, for, as we have said, the patent can only stand on the bare

conception. Surely that is incredible. It may be that the introducer, the popularizer, of a new and valuable variant, should gather the profits; perhaps any new use should be enough. But the law is not so; we must find a touch of something beyond the ruck of ordinary craftsmanship, either in conceiving a new need, or its satisfaction, or in contriving the means; nothing else will serve.

Since we think the claims invalid for want of invention, we need not consider the other defences.

Decree reversed; bill dismissed.

[fol. 930] UNITED STATES CIRCUIT COURT OF APPEALS, SECOND CIRCUIT

At a Stated Term of the United States Circuit Court of Appeals, in and for the Second Circuit, held at the United States Court House, in the City of New York, on the 8th day of February, one thousand nine hundred and thirty-seven.

Present: Hon. Learned Hand, Hon. Thomas W. Swan, Hon. Augustus N. Hand, Circuit Judges.

TEXTILE MACHINE WORKS, Plaintiff-Appellee,

vs.

LOUIS HIRSCH TEXTILES MACHINES, INC., Defendant-Appellant

Appeal from the District Court of the United States for the Southern District of New York.

This cause came on to be heard on the transcript of record from the District Court of the United States for the Southern District of New York, and was argued by counsel.

On Consideration Whereof, it is now hereby ordered, adjudged, and decreed that the decree of said District Court be and it hereby is reversed with costs and with instructions to dismiss the bill.

It is further ordered that a Mandate issue to the said District Court in accordance with this decree.

Wm. Parkin, Clerk.

[fol. 931] Endorsed: United States Circuit Court of Appeals, Second Circuit. Textile Machine Works vs. Louis Hirsch Textile Machines, Inc. Order for Mandate. United States Circuit Court of Appeals, Second Circuit. Filed Feb. 8, 1937. William Parkin, Clerk.

[fol. 942] UNITED STATES CIRCUIT COURT OF APPEALS, FOR THE SECOND CIRCUIT

TEXTILE MACHINE WORKS, Appellee,

against

LOUIS HIRSCH TEXTILE MACHINES, INC., Appellant

Before: L. Hand, Swan and Augustus N. Hand, Circuit Judges.

ON PETITION FOR REHEARING

Howson & Howson for the Petition.

PER CURIAM: Petition denied.

U. S. Circuit Judges.

Filed, Mch. 2/37.

[fol. 943] UNITED STATES CIRCUIT COURT OF APPEALS, SECOND CIRCUIT

At a Stated Term of the United States Circuit Court of Appeals, in and for the Second Circuit, held at the United States Court House, in the City of New York, on the 2nd day of March, one thousand nine hundred and thirty-seven.

Present: Hon. Learned Hand, Hon. Thomas W. Swan, Hon. Augustus N. Hand, Circuit Judges.

TEXTILE MACHINE WORKS, Plaintiff-Appellee,

vs.

LOUIS HIRSCH TEXTILE MACHINES, INC., Defendant-Appellant.

A petition for a rehearing having been filed herein by counsel for the appellee; upon consideration thereof, it is ordered that said petition be and hereby is denied.

Wm. Parkin, Clerk.

[fol. 944] Endorsed: United States Circuit Court of Appeals, Second Circuit. Textile Machine Works vs. Louis Hirsch Textile Machines, Inc. Order. United States Circuit Court of Appeals, Second Circuit. Filed Mar. 2, 1937. William Parkin, Clerk.

[fol. 945] UNITED STATES OF AMERICA,-SOUTHERN DISTRICT OF NEW YORK

I, William Parkin, Clerk of the United States Circuit Court of Appeals for the second Circuit, do hereby certify that the foregoing pages, numbered from 1 to 944, inclusive, in 2 volumes, contain a true and complete transcript of the record and proceedings had in said Court, in the case of Textile Machine Works, Plaintiff-Appellee, against Louis Hirsch Textile Machines, Inc., Defendant-Appellant, as the same remain of record and on file in my office.

In Testimony Whereof, I have caused the seal of the said Court to be hereunto affixed, at the City of New York, in the Southern District of New York, in the Second Circuit, this thirtieth day of April, in the year of our Lord one thousand nine hundred and thirty-seven, and of the Independence of the said United States the one hundred and sixty-first.

Wm. Parkin, Clerk.

[fol. 946] SUPREME COURT OF THE UNITED STATES

ORDER ALLOWING CERTIORARI—Filed June 1, 1937

The petition herein for a writ of certiorari to the United States Circuit Court of Appeals for the Second Circuit is granted. And it is further ordered that the duly certified copy of the transcript of the proceedings below which accompanied the petition shall be treated as though filed in response to such writ.

[fol. 947] IN SUPREME COURT OF THE UNITED STATES

STIPULATION AND ADDITION TO RECORD—Filed July 20, 1937

It is hereby stipulated between the Petitioner, by its attorney, and the Respondent, by its attorney, that in reprinting the Record in the above-entitled cause, the Clerk shall include, in addition to the Record as submitted with the Petition for Writ of Certiorari, the following documents and papers, to-wit:

The testimony set forth on pages 152 to 205 inclusive in Volume I of Plaintiff's Exhibit 3 (the printed transcript of record prepared by the Clerk of the Court of Appeals for the Third Circuit in the suit of Alfred Hofmann, Inc. vs. Textile Machine Works, No. 5312, March Term, 1934)

Defendant's Exhibit Q-1 as reproduced on pages 489 to 497 inclusive of Volume II of said Hofmann Record, Plaintiff's Exhibit 3, (offered at page 292 in the Record of this suit)

Defendant's Exhibit V-1 as reproduced on pages 507 to 513 inclusive of Volume II in the said Hofmann Record, Plaintiff's Exhibit 3 (offered at page 294 in the Record of this suit)

[fol. 948] Defendant's Exhibit Y-1 as reproduced on pages 523 to 541 inclusive in Volume II of the aforesaid Hofmann Record, Plaintiff's Exhibit 3 (offered at page 296 of the Record in this suit)

Defendant's Exhibit T-1 offered at page 293 of the transcript of record in this suit, (the same being Defendant's Exhibit BB, offered at page 239 of the aforesaid Record in the Hofmann suit, Plaintiff's Exhibit 3 herein), a photostat print of said exhibit being hereto annexed and marked Defendant's Exhibit T-1

Defendant's Exhibit B-2, offered at page 296 of the Record in this suit, (the same being Defendant's Exhibit O, offered at page 188 of the aforesaid Record in the Hofmann suit, Plaintiff's Exhibit 3), a photostat copy of which is hereto annexed and marked Defendant's Exhibit B-2.

True duplicates of all of said documents and papers are filed herewith, and the Clerk is requested to include the same in the printed Record herein, in accordance with this stipulation.

Hubert Howson, Attorney for Textile Machine Works, Petitioner. Samuel E. Darby, Jr., Attorney for Louis Hirsch Textile Machines, Inc., Respondent.

July 15, 1937.

[fol. 949] ELMER R. ROTH, called on behalf of the defendant, being duly sworn, testified as follows:

Direct examination.

By Mr. Darby:

My age is thirty-eight. My residence is 2 Elm Street, Dover, N. J. I am in attendance at the trial of this case by reason of subpœna. My occupation is that of a full fashioned knitter. I am employed by Gotham Hosiery Company in their Dover, N. J., plant. I have been employed by Gotham ever since they took the plant over at the end of 1927. The plant was owned at the time it was taken over by [fol. 950] Gotham by Onyx Hosiery Incorporated. I was with Onyx from the time that it was changed over from Paul Gunther, Incorporated. I don't have the date. The Onyx Hosiery Company took over the company of Paul Gunther, Inc. I was employed by Paul Gunther, Inc. I first entered their employ some time in September, 1916. I was continuously in their employ until the time it was taken over by Onyx. I was continuously in the employ of Onyx until it was taken over by Gotham. I still am in the employ of Gotham.

I first went with the Gunther Company in the capacity of a full fashioned knitter. I worked on the full fashioned knitting machines. My work is still the same.

I have not been working on the same machines throughout that period of time. Approximately eight years I

worked on the same type of machines, that is on Richter 39 gage machines. That was beginning in 1916 to sometime in 1924. When I went to work with this Richter machine, when I started my work on this Richter machine there were fourteen that I know of of that special type at the Gunther plant.

When I first went with the Gunther Company, Heyde, I believe, was the foreman at that time. Mr. Heyde is here in the courtroom. A man by the name of Nobus succeeded him as foreman. Nobus is in the courtroom. Paul Gunther succeeded Nobus. Mr. Paul Gunther is here in the courtroom. At the present time my foreman is Walter Peters.

The Gotham Company still has got one of these original Richter machines that I worked on. I can identify this as the attachment that we used on those machines to make the pointed wedge heel, as they called it at that time. This is either a machine that I worked on or one just like it. I don't know if it is the same one or not, I couldn't say.

[fol. 951] (The attachment for the machine referred to was put on the small table in front of the Court's bench.)

(The witness stepped down by the machine.)

The type of knitting machine this attachment was on was a Richter machine. That was a flat type Richter machine.

Q. 35. Will you describe this machine, perhaps we can make it quicker if I do it this way. What is this threaded member at the end of the machine, what did you term it in your work?

A. Well, that is a spindle with a right thread on one side and left thread on the other side. That is, the attachment had a spindle. It had a spindle at the other end with reverse thread. The completed machine on which this attachment was mounted was approximately, at that time—18-section machines—were possibly twenty-eight to thirty feet long. Just one attachment was provided on the complete machine. The attachment was situated not at the end, and it was not in the center, it was a little bit off the center of the machine. Between the ends.

These rectangular rod members are what they term the carrier rods. Those carrier rods extended the complete length of the machine, but they were joined, they were in two sections, and joined by a coupling mechanism. They

were joined so that both sections would move together. They would move at the same time, the same operation.

This mechanism that appears to be mounted on the spindle is a nut that would move this block either in or out to start from a point and widen out, to shape the pointed heel. The pointed heel is a reinforcing thread on the stocking.

It will be noticed that there are two of the devices you call [fol. 952] nuts, one on each spindle. The spindles are connected together here (indicating), to make it one and move the whole spindle at the same time, when the spindle moves in one direction one nut moves to the right and one to the left toward each other. When the spindle is moved in the opposite direction the nuts move in the opposite direction.

As to the mechanism here that consists of a gear wheel mounted on the spindle in mesh with a beveled gear and square headed stud. I will say that these gears were for the purpose of resetting these nuts to again start to make the pointed heel. When the nuts had approached together as closely as it was desired or necessary to have them do so you would then manually reset the nuts back to the proper position for starting another operation. We would do that by hand.

Q. 56. Will you demonstrate how you could turn those nuts from their present position?

A. (Witness demonstrates by running machine.) You can turn this out, and then one nut moves to the right and the other one to the left to reset it and again start to make the next step.

When I started to reset the nuts I moved a pawl out of the way. That pawl is on a ratchet apparatus that works from the cam shaft in order to move this spindle and again rack these nuts in to make this pointed heel. This is done while the knitting operation is going on, that is, while the machine is in operation. You could rack out the nuts while the machine was in operation.

Ordinarily we would wait until we were pretty near ready to again start to make the pointed heel and we would rack it out, set it in proper place. The mechanism employed for turning the spindle while the machine was in operation was this hand crank. That is, for racking it out. When the nuts were moving towards each other the mechanism employed for actuating the pawl, was as follows:

[fol. 953] There was an arm in back of the machine which was connected with another arm that operated a roller on

the cam. This cam had a flat side. When the shift was to take place this arm would drop on that flat side and as the cam shaft came around and the cam come to the high side it would push this ratchet apparatus and work the spindle.

I recognize the photographs that are handed me. In the first photograph is shown this same apparatus that is the attachment that we have here on the table. It is attached to a machine in this figure. The yarn guides are shown in the picture. The section of the photograph immediately beneath is another view of the same apparatus. The third photograph also is a view of that apparatus. In the fourth photograph is shown the pattern chain and the lever which operated this arm on the cam shaft. This pattern chain controlled the operation of the rotation of the spindle by these buttons that are shown here on the chain. When one of these buttons would come around to this lever it would automatically lift it away and thereby let the machine operate the spindle.

The last photograph is another view of the same mechanism taken in perspective. That is a view of the entire pattern chain as it looked on the machine. These photographs show the machine with attachment.

The attachment here in court is identical with the apparatus that I worked on from 1916 on. That is identical with what I worked on.

Mr. Darby: I offer the pamphlet containing the photographs in evidence.

The Court: It will be admitted.

(Pamphlet received in evidence and marked Exhibit D-C.)

[fol. 954] Q. Will you point out on the Court's copy of the photograph the mechanism that operates the spindle, to rotate it?

A. Yhy, yes.

The Court: Just mark it with a pen. Mark an "X" at the point.

The Witness: Here is one view of it (indicating). This is the cam.

Mr. Darby: I will mark the cam "A."

The Witness: And this is the roller up here (indicating).

Mr. Darby: Mark that "B."

The Witness: And this is the arm that goes up in back of the machine.

Mr. Darby: Mark that "C."

The Witness: To operate this arm. This is about half the length that it was with the other part connected onto it. I believe over here (indicating) is a better view of the arm that that roller is attached to. This arm here (indicating) is the same as what this roller is attached to here, "B."

Mr. Darby: We will letter that "D" on the next photograph.

The Witness: The machine was a full fashioned machine that this apparatus was attached to. The mechanism for fashioning, that is narrowing and so on, to fashion the stocking, was at each end of the machine. It had no connection with this attachment whatever. The narrowing mechanism consisted of a short spindle with a thread on, similar to this. It was a short spindle and at the other end was a short spindle with a reverse thread, and that fashioned when it narrowed the work off of the main cam-shaft, and fashioned [fol. 955] the stocking in the narrowing. Each of those spindles had a traveling nut on it.

Q. 85. What mechanism was employed in the machine for rotating the spindles so as to cause the nuts to move?

The Court: These are the end ones of the compact mass?

Mr. Darby: Yes.

The Witness: There was a cam provided on the end of the cam shaft at either end of the machine with a roller and arm that controls that pawl movement of those spindles on either end of the machine. A pawl similar to that one (indicating). And a ratchet tooth similar to this ratchet tooth at each end.

A separate chain with buttons provided for actuating the narrowing mechanism. There was a chain which if started at the proper time would work this automatically.

Q. 89. And that chain was separate from the chain which I will number E in the photograph?

A. Right. That was altogether separate.

Q. 90. I hand you a pair of stockings and ask you if you recognize those stockings?

A. That looks like the stocking that we used to make when I first came with Paul Guenther, Inc., with the pointed heel into them, made by this attachment here.

Mr. Darby: I ask to have the stocking marked for identification.

(Received and marked Exhibit D-C, for identification.)

That pointed heel was effected by plating or reinforcing thread. That was plated in at that time in all ingrain work. That is ingrain work.

[fol. 956] The function in this attachment of these pivoted arms was as follows:

The idea of these pivoted arms was when not in use we could lay them back out of the way. When in use we would simply bring them forward again, and when this was set these stops would hit on there to stop the carrier from going the entire width of the fabric. These were the same stops in use and employed by me since 1906. We never did have occasion to cause the nuts in the spindles to be moved backward, other than in racking it out entirely. The reason was that I do not think there was any demand for goods of that nature, at that time. If it was desired to have the nuts move outwardly, I would know how to do it.

Q. 98. How would you do it?

Mr. Howson: I object. He is asking a conclusion or hypothetical question of the witness which is not competent.

The Court: Is the question directed to how the machine would operate if they were to be moved outward? How it would have operated if connected to the knitting machine?

Mr. Darby: Yes.

The Court: I think I will permit it.

Mr. Howson: He is asking the witness what changes he would have to make in the device if he wanted to do something else with it.

The Court: If that is so it would be different. I understand it is as to what he would have to do manually to accomplish it in connection with the machine.

Mr. Howson: If that is the case, I have no objection.

[fol. 957] A. In that case, if we had to make a style where we had to move them the other way, the only way we could do it would be to lift the dog and set it by hand every time there was a shifting to take place, and set it at the next one.

Cross-examination.

By Mr. Howson:

X Q. 99. Mr. Roth, what was your name for these stockings which have been marked for identication Defendant's Exhibit C?

A. They were ingrain work of the Pointex type.

X Q. 100. Did you have any name for this attachment?

A. That was what we termed the Pointex Attachment.

X Q. 101. Now, in making this Pointex reinforcement, as shown in this exhibit marked C, how many carrier bars were used in laying the reinforcing thread?

A. In laying the reinforcing thread?

X Q. 102. Well, the thing that made the Pointex.

A. One on each one.

X Q. 103. And in doing that work, how did you have the abutments arranged on the carriers. Did one of the carrier bars—was it stopped on its inward motion by one of these stops and on the outward motion by the regular stop on the machine?

A. On the end. Correct. The other carrier was controlled the same way on the opposite side. I did not say that we are still using these attachments, not that identical attachment. We are not still making the Pointex heels. We are making modified heels. That is a heel that starts in a square straight narrow form and moves that way (indicating) and then it narrows out wider. I am at the present time using a Lieberknecht high-speed machine to make those [fol. 958] stockings on. The agents for that machine in this country I believe are Alfred Hofmann, Inc.

As to whether that machine has any attachment on for controlling the carrier bars and auxiliary attachment for controlling the carrier bars, in addition to the end stops of the machine I will say that the stops on that machine are in the center, and it has an additional attachment on to control the stops on the carrier bars. That attachment works much on the same principle as this one. In the case of that attachment you do have a reversely-threaded spindle. I believe it is arranged to work automatically in both directions, although I never worked it. According to my best recollection I believe that attachment has the automatic reverse. We have had that attachment about two and one-half years. So far as these old attachments that we have been speaking of, they are not in use in the mill at all today. Those machines that had those on were worn out in the meantime. The attachments were not worn out. They possibly could have been used on other machines. I do not know whether they would fit on other machines. We did not try to fit them on. Not to my knowledge. The reason might be because machines began to come in with other attachments. This modified stocking that I was speaking of

certainly could be made on this attachment which I have produced here. That is a reinforcement in which the stop nuts on the attachment only have to be moved in one direction.

We make cradle foot stockings in our mill. I could not tell you what attachment we use in making those. I am a legger. I do not know. That is made on footing machines. There are some footer machines right close by the legger machines, but I never bothered about them. I just pay attention to my job.

I do not know if there has been any shadow clock made in our mill or not. I do not know what attachment they would be made on. I do not know whether they would be made [fol. 959] on this device that has been produced.

Redirect examination.

By Mr. Darby:

I believe I said the more recent machines are Lieberknecht high-speed machines. They call them high-speed machines because they operate at 60 or 65 courses a minute. The older machine used to operate about 40, 41 or 42 courses a minute. Those new machines come complete with attachments. I am working on the Lieberknecht high-speed machine.

I said in answer to a question asked me by Mr. Howson that I believe the machine can automatically reverse, but I have never used it. I do not know just why. We have no orders for any work of that kind. That is the only reason that I could give.

Recross-examination.

By Mr. Howson:

I am not making the foot. I am just making the leg. That is all.

Paul Guenther, called and sworn on behalf of the defendant, testified as follows:

Direct examination.

By Mr. Darby:

I am forty-two. I reside at Dover, N. J. I am employed by the Gotham Silk Hosiery Company. My job there is

foreman in the knitting department. I was employed by the Guenther Company since 1913, in April.

When I was employed by the Guenther Company I at once became familiar with the machines they were using at that time. I was a full fashioned hosiery knitter at that time.

[fol. 960] I have heard the testimony that has been given about the machine that is here in the Court.

Mr. Darby: I offer this attachment in evidence at this time.

(Received in evidence and marked Exhibit D-D.)

I am familiar with the construction of this machine. One or more machines with the attachment like Exhibit D was in use at the Gunther plant at the time I entered their employ. I worked on the footer. On the Richter footer.

The Court: He said he used this type on the footer.

The Witness: No, sir; Mr. Darby said if I worked on the type machine like that. I said not on the legger, on the footer.

The Court: But with this type machine.

The Witness: This type.

The Court: You used this type of attachment, did you?

Q. 14. Was this attachment on the footer machines?

A. No, sir. It was only on the leggers at that time.

I was in the Gunther Company until the time it was taken over and since that time, and I am in the firm yet. I worked with Gunther until it was taken over by Onyx and stayed with Onyx until it was taken over by Gotham, and I am still with Gotham. Throughout that period of time these machines were used continuously. At that time I was there there was fourteen machines. And they were used continuously right up until they stopped them some couple of years ago, I don't know exactly, but since that time they were installed, they have been working all the [fol. 961] time since that time, they have been set up, they have been worked steady. I recognize this machine as one of the machines. That has been continuously in use since 1913 or 1914 or thereabouts. It was not only finished in 1913 when I came there. They were not all finished. That is, all fourteen were not finished. As to about when all

fourteen of them were in operation I don't know exactly, about the end of 1913, I think, something like that.

These machines were used in the normal work of making stockings for sale, that is, they were used steadily for turning out stockings, which were sold by the company.

I recognize these photographs handed me. Shown on Defendant's Exhibit C. Those photographs are of the Richter machine. I was made foreman of the department in which these machines were operating. That was the end of 1921.

Q. 39. Do you recognize the pair of stockings which I hand you which has been marked Defendant's Exhibit C for identification?

A. Yes, that is the type of stocking we was running that time.

Mr. Darby: That is all.

Mr. Howson: No cross.

(No cross-examination.)

FRANK HEYDE, called on behalf of the defendant, being duly sworn, testified as follows:

Direct examination.

By Mr. Darby:

I live in Brooklyn. I am fifty-one years old. I am employed by Julius Kayser Company but I am out of work just now. I was last employed by Julius Kayser Company. [fol. 962] Their business is hosiery manufacturing. I was employed by the Gunther Company. I was also employed by the Richter Company from August, 1912, in Germany and they sent me over here to this country for putting up their machines. The first place that I went to put up the Richter machines on my arrival in this country was at Paul Gunther, Dover, N. J.

I recognize this attachment, this Defendant's Exhibit D here in the courtroom. It is a pointex, we called it at their place at Dover, N. J., we call it a pointex attachment. At the Gunther place. This was not part of the equipment that I installed in the first couple of machines. The first

few machines, I believe it was four or five, maybe six machines, they came without, but all the rest they was with it, with that attachment. The first five or six machines were without this attachment and all the rest with the attachment. As much as I can remember there was fourteen in all.

I did not continue in the employ of Richter. I left Richter and went over to Mr. Gunther. He took me over I think in 1913. I continued to work with Gunther from that time on until about the end of 1918. I was foreman there. Till 1918. I left Gunther. Then I went to Julius Kayser in Brooklyn.

I did not personally with some assistance of perhaps other men personally install all of those fourteen machines. I was there until they all was finished.

Q. 31. And you had charge of the installation of them all?

A. I had not charge over it but after I took a job as a foreman then I had charge over it.

The Court: The installation, who installed them for the Richter Company, somebody else with you?

The Witness: Yes.

[fol. 963] Q. 32. You and somebody else installed all of those machines?

A. There was more than me.

Mr. Darby: Yes.

The Court: Were you in charge or someone else in charge?

The Witness: Well, each you know everyone was working independent from each other at that time.

Q. 33. As I understand it, Richter sent over a number of men of which you were one to install these machines, is that right?

A. Only you know we was working by ourselves.

Q. 34. I understand that, but what I am interested — now is did you install all of these fourteen machines?

A. No.

Q. 35. Who did?

A. Mr. Nobis, then there was another one, I think it was Fenwick.

Q. 36. But you know that all fourteen of them were installed?

A. They were not installed, no.

Q. 37. All fourteen machines were working there, weren't they?

A. Yes, in 1913.

I had something to do with putting out some of them, if not all, and Mr. Nobis and perhaps other people had something to do with some of them too. Some four or five machines didn't have attachments on as we put them up. Attachments were later put on those machines too. I think it was either in 1915 or 1916. The whole fourteen machines finally had the same attachment like this Defendant's Exhibit D. They had them all on later.

[fol. 964] I recognize the photographs of Defendant's Exhibit C as photographs of the attachments on machines. That I installed, that I erected.

I never went back to Gunther or Onyx or Gotham.

I was made foreman in 1913. I continued as foreman from 1913 on until I left in 1918.

At the time I left in 1918 I think we had fourteen machines with attachments of this type. As part of my job I had to keep those machines in working order and repair them when repairs were necessary.

Those machines were employed, to my knowledge, for the manufacture of stockings of the company in the regular course of business.

Mr. Darby: That is all.

Cross-examination.

By Mr. Howson:

I didn't have anything to do with making stockings—operating machines for making stockings. I had charge over the machines. I didn't operate them. I first saw these photographs, I am referring to Exhibit C, just lately, I think one or the other day. I did not have anything to do with taking the pictures. I don't know where they were taken. I said I recognized them as showing the old attachments at the Gunther mill that Mr. Darby was asking me about because I think we had only one kind on the Richter machine. And that is the kind that is shown in these pictures, exactly the kind we had there.

[fol. 965] FRANK NOBIS, called on behalf of the defendant, being duly sworn, testified as follows:

Direct examination.

By Mr. Darby:

I live in Brooklyn. I am fifty-five years old. I worked the last time by Hofmann's Corporation. They are the manufacturers of textile machinery. Knitting machines, full fashioned hosiery machines. That was about two years ago.

The Court: How long ago was your last employment with them, that is the first question.

The Witness: That is about two years now, see.

Q. 10. Two years?

A. Yes. I have been employed by the Gunther Company in connection with installing some machinery, knitting machinery. That was in 1912. That was the Richter machine. At that time I start erecting that kind of machines there was another fellow here. I comes over here, see. I was joined by Mr. Heyde. He comes six weeks later. The first couple of machines did not have attachments. I erected the machines, see, the Richter machine, he comes later with that pointex attachment. I mean this attachment shown in Exhibit D. We erected the same Richter machines with that attachment. I erected more than one machine with this attachment. I start to work at the Gunther plant first of August, 1912, and I go 1913, June the 5th.

When I left about eight Richter machines had been erected. About half of those eight machines had this attachment, an attachment like Exhibit D. I saw those machines in operation. With that attachment. I have been back to Gunther since then. I be back to Gunthers since 1919. I saw those machines that I had installed then. As [fol. 966] to how many Richter machines were there then I will say we have on that floor I got the charge over, we got fourteen machines. With that attachment all working. All fourteen machines with attachment were working in 1919. When I went back to work with Gunther. My job with Gunther when I went back in 1919 was that of foreman in charge of these machines. I had charge of other machines. There were fifty-nine more machines there.

Q. 41. Were all of those machines employed for making pointed heels?

A. Well, different kinds of machines with pointex.

I left Gunthers in 1922. I have not been back since. I have never been employed by them since. From the time that I went back in 1919 to 1922 these machines were kept in operation turning out stockings with pointed heels.

Mr. Howson: No cross-examination.

(No cross-examination.)

Max Gruner, called on behalf of the defendant, being duly sworn, testified as follows:

Direct examination.

By Mr. Darby:

I am thirty-five years, I live at Dover, N. J., I am assistant superintendent of the Gotham Silk Hosiery Company. I have been employed by the Gotham Company since they took it over since 1926.

I was employed by the Gunther Company. I was in charge of the order and silk department. I went with Gunther in 1916. I continued with Gunther until it was taken over by Onyx. I continued with Onyx until it was taken over by Gotham. I have supervision over the records of the Gotham Company. I have been able to obtain [fol. 967] from the original records of the Gotham Company data pertaining to the purchase of certain machines from Richter.

Q. 10. Will you tell me when those machines were purchased from Richter?

The Court: Is the knitting machine and the attachment—are they both Richter's?

Mr. Darby: Yes, sir.

The Court: So that this is not the only Ritcher proposition, the machines themselves, the knitting machines themselves were Richter's too, were they?

Mr. Darby: That is my understanding.

Q. 11. Is that right, Mr. Gruner?

A. Yes.

Mr. Darby: As I undersand it, your Honor, that has been the practice in this industry from the very beginning.

The Court: Well, we have sort of referred to this machine as a Richter machine and I didn't know the knitting machine itself was a Richter machine too.

Mr. Darby: It is a Richter built Cotton machine.

The Court: I see, all right.

A. I have records in my file from June the 23d, 1913, when machines was invoiced when they arrived in this country at the company. They were Richter machines, Richter leggers. On that invoice there was one machine. I was able to find the invoice for the other Richter machines in my file. This invoice identifies the machine by number—by the manufacture and number. The machines were bought from the agent's spindler.

[fol. 968] I found in my records data bearing on the erection of the machines and men being sent for the purpose of erecting machines. I have the letter which states the time when Mr. Heyde started, was sent over here to erect machines. The date of that letter is August 26, 1912.

Mr. Darby: I offer photographic copy of the letter in evidence. You don't mind photographs in place of the originals?

Mr. Howson: No.

(Photograph received in evidence and marked Defendant's Exhibit F.)

Mr. Darby: I offer in evidence photographic copy of the one invoice that was produced by the witness.

(Photograph received in evidence and marked Defendant's Exhibit G.)

Mr. Darby: I might state to the Court and Mr. Howson rather than cumber up the record I am merely producing one in each instance rather than going through them all.

The Witness: I have got a record of the employment of Paul Gunther. Paul Gunther was employed April 1, 1913. I likewise have got our original record of employment of Elmer Roth. Elmer Roth was employed September the 13th, 1916.

Mr. Darby: I offer in evidence a photographic copy of the employment record pertaining to Paul Gunther.

(Photograph received in evidence and marked Defendant's Exhibit H.)

Mr. Darby: I offer in evidence a photographic copy of the employment record of Elmer Roth.

[fol. 969] (Photograph received in evidence and marked Defendant's Exhibit I.)

Q. 22a. Is there any connection between the invoice of E. O. Spindler which is in evidence as Defendant's Exhibit G and the attachment which is here in the court room marked as Defendant's Exhibit D?

A. Yes, the invoice states that the pla-ted wedge heel was sent with the machines.

Q. 23. And can you identify, is there any way by which you can identify this particular plaited wedge heel as being the one which this particular invoice was for?

A. Well, it was sent, it was known at that time by the, as a so-called wedge heel. The pointed heel was really only given by Paul Gunther, Inc., they called it Pointex heel.

The Court: If you can identify by your records this particular machine that is here, by number or anyway that you can see whether this machine was the one spoken of in that invoice.

Q. 24. Were the machines given numbers by you?

A. They were given numbers, yes.

Q. 25. What was the number that was given to this machine?

A. The manufacturing numbers were numbered by our own numbers which was numbered 210. I know what attachment that is here in the court room. It is a pointed heel, Richter pointed attachment. The number is 210. In other words, this attachment is the attachment for which Exhibit G is the invoice.

I produce one of our early invoices for stockings made on this Richter machine with attachments. I identify the original invoice with this photograph that is handed to me. On November 25, 1916, there was style 366, known by our number 298—forty-four dozen were sent on that invoice.

[fol. 970] Mr. Darby: I offer in evidence a photographic copy of that sample invoice.

(Received in evidence and marked Exhibit D-H.)

Q. 33. I call your attention to some photographs, Defendant's Exhibit C. Were you present when those photographs were taken?

A. I was. They were taken, approximately about three weeks ago. The number of the machine, that was being photographed, was our No. 210. A 39-gauge Richter legger. I was present when Defendant's Exhibit D was taken off of the machine. It was the attachment that was on the machine that was photographed, and taken off later on. That is the attachment.

Mr. Darby: That is all.

Cross-examination.

By Mr. Howson:

I would say we have about ten of those attachments still in our mill. Some are still on the machines. Some are on and some are off. Those that are off are just laying idle. We never made any effort to sell them to my knowledge.

X Q. 43. Well, where are they? Where do you keep things of that kind in the mill? Is it a junk place?

A. It is not a junk place. It is a place where machines which have been worn out—and those attachments are also worn out—they are still at the place to be kept.

I say some of the attachments are still on the machines. We just have not bothered to take those attachments off of the machines. The machines stand as they have been stopped. The machines have not been operated for several [fol. 970a] years. They have been superseded by other machines.

Mr. Howson: I guess that is all.

Redirect examination.

By Mr. Darby:

R. D. Q. 47. These other machines that you have referred to are the high-speed machines?

A. All machines which come in are high-speed machines.

Mr. Darby: That is all. I will now take up what is known as the Kayser use. I think that concludes the Gotham. I will call Mr. Mutchler.

ARTHUR W. MUTCHLER, called and sworn as a witness on behalf of the defendant, testified as follows:

Direct examination.

By Mr. Darby:

I am forty-seven years old. I am superintendent of the hosiery department of Julius Kayser. I have been in the hosiery business since 1920. I was first employed by Julius Kayser as a full fashioned knitter.

We employed a Ludwig machine at that time for knitting full fashioned hosiery. I worked on it. They had two Ludwig machines that made pointed heels. They put on attachments later. I think the attachments were put on in 1923. I made pointed heels at the time I first went with the Kayser Company on two machines. The pointed heels were made on the two machines with a ratchet attachment. Those two machines came with the attachment. This ratchet attachment was located on the end of the machine. [fol. 971] That attachment was not part of the narrowing mechanism. It was in addition to the narrowing mechanism.

That attachment for making the pointed heels that I was working on at that time was a ratchet attachment. A cam mechanism was provided for rotating the ratchet. When you rotated the ratchet the cam would lift an arm and move the ratchet in. That would leave your carrier follow in on the ratchet.

The Court: What was the carrier? What do you call the carrier?

The Witness: The thread carrier.

The ratchet was mounted on a casing over your carrier rods. The ratchet was not mounted on a spindle, or a shaft of any kind; that was not a spindle attachment. We were equipped with a spindle attachment, on other makes of machines there were spindle attachments. These other makes of machines were the Carl Lieberknecht. I was familiar

with that machine. I worked on one of those machines. That Lieberknecht machine was likewise a full fashioning machine. It also made pointed heels. We had a spindle attachment which enabled us to make pointed heels. The spindle was a reversible screw. Right and left thread screw. That was located in what they call the first section of the machine. That is, between the ends of the machine, but nearer one end than the other. I did not work on that particular machine. I worked on a machine like it while I was with Kayser.

I was familiar with that particular machine from the time I first went in their employ. Kayser had two machines of that type with the original attachments on at that time to my knowledge. I have continued in the employment of Kayser from that time to the present time. Kayser has only one of those machines at the present time. They scrapped the other one for the reason that it was [fol. 972] worn out. The one that we still have is not in operating condition; it has not been worked for two years. But up to two years ago that machine was working in manufacturing stockings for sale.

I am handed some photographs and asked if I can identify the machine as shown in these photographs. I will say yes, this attachment is on the machine. That machine shown in these photographs is known as shop number 64. That is the Lieberknecht machine which I stated is still at my factory. It is either on that machine or a machine like it that I worked. There are two nuts provided for the reverse threads of the spindle. I will point them out and mark them. This one is marked "A." The other one is marked "B." And we will mark them *and* "A" and "B" on the second photograph and "A" and "B" on the third photograph.

The cam motion from the main cam shaft caused the spindle to rotate. As to what controlled, when the cam would be made operative so that the spindle could operate, I will say that there was an idler wheel on there with studs. The idler wheel would move six courses and drop your pawl in your ratchet to move your spindle. Those studs constituted a pattern which determined when the rotary movement would be imparted to the spindle. That mechanism came equipped so that you could change the pattern at will. You could change those studs. When the spindle

was rotated in one direction the nuts would travel toward each other. The spindle was power-operated in one direction. It was not power-operated in the reverse direction. You would rack it out by hand. By a small wheel on the end. You would turn that back. You could do that by means of the handle which I will mark "C."

Mr. Darby: I offer the photograph in evidence.

[fol. 973] (Received in evidence and marked Exhibit D-J.)

The Witness: I know Mr. Hockin. I also know Mr. Hecker. They have been employed by the Kayser Company while I was employed there.

I am testifying under a subpœna in this case.

Mr. Darby: That is all.

Cross-examination.

By Mr. Howson:

The Witness: I have been at the Kayser mill since 1920. In that time there were seventeen attachments like that shown in the photographs which Mr. Darby had me identify that were in actual use in the mill. None of them are in use at the present time. The machines were scrapped. The whole thing was scrapped. There is only one machine there. That is not in use. It is not in a museum. It just stands on the floor.

We are not making Pointex heel stockings at the present time. We made some for export I think last November. We used Schubert and Salzer machines in making those. There was an attachment on that machine for doing the pointed reinforcing work. I cannot say the exact date of those machines. They were purchased from Alfred Hofmann, Inc. That machine has a spindle attachment. We only worked that spindle automatically in one direction. There is mechanism on some of the machines for working it automatically in both directions if you choose to do so. But in making the Pointex heels we would operate it only in one direction automatically.

We have some Reading machines there. I recall that in February, 1929, there were purchased for the Kayser Mill, four Reading machines which had the attachment for reinforcement. With the reverse spindle attachment. I think

[fol. 974] that was before we secured the Schubert and Salzer machine with that attachment.

We are not making any shadow clock stockings. We have not made any. Cradle foot we are making. We do not use the reverse motion in making cradle foot. We used the stud wheel. An altogether different attachment. We did not use the Pointex attachment any way for that, we used the stud wheel.

As to those old original attachments that I referred to, the ratchet attachment. We had two of those on a Ludwig machine. Two of them were part of the machine itself. They came from Germany on the machine. I have heard of a Landenberger attachment. I do not remember ever seeing one of the Landenberger attachments on the machine. That was sort of a drum device for making Pointex heels.

Mr. Howson: I think that is all.

Redirect examination.

By Mr. Darby:

The Witness: I referred to some Schubert and Salzer machines. As to the exact date when they were acquired, I will say that there were some acquired I guess three or four years ago. We got them at different times.

I have charge of the supervision of the records of the Kayser Company insofar as our work is concerned. I have extracted the employment cards of Adolph Hecker and Peter Hockin. I have the original cards here with me. I recognize this photograph as a photograph of our original records of their employment.

Mr. Darby: I offer these photographs in evidence.

(Received in evidence and marked Exhibit D-L.)

[fol. 975] The first two Lieberknecht machines we acquired came with the attachments and we thereafter put the attachments on fifteen other machines. We made these other attachments in our shop. We used only the original attachments as patterns for making those attachments. We have got original records which enable us to state when that work was done. There is a record ordering castings to make up these new attachments. That work was started

October 7, 1921. They were completed some time in January, 1922.

Mr. Darby: I offer in evidence photographic copies of the record of October 7, 1921, referred to by the witness. There are two of them there.

(Received in evidence and marked Exhibit D-M.)

PERCY HOCKIN, called and sworn on behalf of the defendant, testified as follows:

Direct examination.

By Mr. Darby:

I live in Brooklyn. I am employed by Julius Kayser & Company. I first went with them in 1915. I went there first as a machinist. As to whether I was familiar with the machines in use at that time I will say that when I first went there I went in the weaving department, and that is a somewhat different type of machine. That is a machine for making gloves and underwear fabrics.

I was familiar with certain parts of the machine for making hosiery, but I went as a fixer in 1925. I was first familiar with the Lieberknecht machine, with the slipper heel attachment in 1921. When I say the slipper heel attachment I mean that was the Kayser name. It was a product of the Onyx. When I say a slipper heel I mean a pointed heel.

[fol. 976] When I came in contact, working with the machines themselves I had seen the machines in operation before that time, from the time I went into their employ.

I have been shown Exhibit J and I recognize the machine there shown and the attachment there shown as the attachment I saw in operation on the Lieberknecht machine. As to whether those machines were used continuously with this attachment in the manufacture of pointed heel stockings throughout my life there I will state that I don't say all the time they were there, but the time I knew they were working on it was around the beginning of 1922, that is when I came in contact with it, the end of 1921, we got an order to make fifteen attachments same as what were on the original two machines and we took down one attachment

and got the dimensions and we used the castings on the original attachment for the patterns for the new ones and we made fifteen. That completed seve[illegible]en in all.

As far as I know all those machines went into operation. Of course I was in the machine shop at tha[illegible] time.

Mr. Darby: That is all.
Mr. Howson: No questions.

(No cross-examination.)

ADOLPH HECKER, called on behalf of the defendant, being duly sworn, testified as follows:

Direct examination.

By Mr. Darby:

I live at Glendale, Long Island. At the present I am out of work. I did work for Kayser Company beginning in 1919 as a machinist.

[fol. 977] I had knowledge at the time I entered the employ of the Kayser Company of the Lieberknecht machine. Two of those Lieberknecht machines were provided with an attachment for making pointed heels.

I stayed with the Kayser Company nearly five years. I did not have anything to do with making duplications of those attachments for their machines but I worked those two attachments in. They were out of use when I got there. I mean the two attachments on the original machine. They were not used at that time for making Pointex, they were idle. That was in 1920 I broke them in, I had other work to do before. It was the summer of 1920 I worked them in, that is when the demand for the Pointex heel came. When the demand for the Pointex heel came I worked those machines in.

I didn't have anything to do with the fifteen additional machines. I was there when those fifteen additional attachments were built. I was there when those attachments were put in operation. The original two machines were continuing working throughout that time. All seventeen machines were used in the normal production of pointed heel stockings by the Kayser Company.

Mr. Darby: That is all.
Mr. Howson: No questions.

(No cross-examination.)

Mr. Darby: I offer in evidence the stocking which was marked for identification Defendant's Exhibit C and which it is agreed was made by the Kayser Company, at least as early as 1916. It will be marked Defendant's Exhibit E.

(Stocking received in evidence and marked Defendant's Exhibit E.)

[fol. 978] And for the purpose of enabling the Court and counsel to follow again we will now take up what we term the Nusbaum defense.

JACOB BOCH, called on behalf of the defendant, being duly sworn, testified as follows:

Direct examination.

By Mr. Darby:

My age is forty-seven. I reside at Glendale, Long Island. I am employed by Nusbaum Knitting Company, Incorporated. That is the successor to D. Nusbaum & Company. At the present time I am foreman. I have worked for Nusbaum or its predecessors since 1907. When I first came with Nusbaum my work was as an apprentice. I have worked continuously with Nusbaum since 1907, with the exception of one year. That was in the early stages.

The Nusbaum Company was in the business of making of bathing suits and underwear. We used knitting machines for that purpose.

They were the Schubert and Salzer type of knitting machines. Full fashioned Schubert and Salzer machine. Those machines were manufactured in Germany. They were flat type of knitting machines. I became familiar with those machines when I first came with the company. The full fashioning was effected by the spindle on both ends. These were threaded spindles at both ends. As to whether the threads were in the same direction, I will say one went one way and the other the opposite way, right and left, what we call right and left spindle. There was one at each

end of the machine. A nut was mounted on the spindle to move when the spindle rotated.

The spindles were rotated from a pattern chain, which would hit into the pawl with a ratchet that would make the machine go either, both ways, either right or left, in or out. [fol. 979] In other words, the nuts would travel either towards each other or away from each other, on both ends the same. The spindle was rotated either direction from the cam shaft. There was more than one pawl. There were two pawls. One pawl actuated the spindle in one direction and one pawl actuated the spindle in the opposite direction.

In knitting garments, that is full fashioned garments such as a bathing suit, it was necessary during the operation of the machine in forming the full fashioned garment to have the spindle rotate in both directions.

I have made some alterations on that machine in 1916. I came to make these alterations because of the demand of the purchasing public. In 1916 we wanted to make a plated garment. I mean by a plated garment, laying another course of thread over the main course—we did that with bathing suits, we did not use the same material for both the plate and the ground. We used rayon on the face side and worsted or mercerized cotton on the ground side. The Nusbaum Company began the manufacturing of that type of garment at that time.

I can identify this (indicating) garment shown me. I made that garment myself in 1916. This is an illustration of the plated full fashioned bathing suit. The rayon is on the outside. Mercerized cotton is on the inside. Nusbaum made and sold, to my knowledge, bathing suits of this type at that time.

Mr. Darby: I offer the bathing suit identified by the witness in evidence.

(Received in evidence and marked Defendant's Exhibit M.)

The machine, as I became familiar with it, was not adapted to make plated garments.

In making the single thread garment, there was only one yarn carrier or thread carrier used. In making the plated [fol. 980] garment, there were two thread carriers used. There were more than one thread carrier which came with the machine. Two came with the machine. In making the

single thread garment we only used one. When we had alternate striped bathing suits we used two, which came with the machine—one thread carrier carrying one color and the other thread carrier carrying the other color.

When we came to plating in solid colors, we used both thread carriers. As to whether we had to modify the machine in order to enable us to plate, I will say that we could use the original machine as it came, for the plating. In order to apply the control friction box, we had to have a one-half inch lead across the machine. In order to apply a plating thread it is necessary for one carrier to have a one-half inch lead over the sinkers. If you did not provide that you could not call it plating. The threads would twist in.

The Court: You mean a part of the mercerized would be on one side and part of the rayon on the other side?

The Witness: Yes. It would be all twisted up.

I put on this additional friction box. Mr. Drawert helped me. He worked in the machine shop. He worked under my direction, and we put them on. That equipment then enabled us to plate anywhere in the fabric between the margins of the fabric.

The plating would have to be parallel to the shape at the margin if you were making a full fashioned garment.

Thereafter we had occasion to want to put irregular-shaped designs in the fabric by plating. That was in 1917. We used stationary stops for that purpose. We used the same equipment that came with the machine, only we applied the stationary stops on both sides—meaning the both [fol. 981] nuts and spindles. To make the design between the edges of the fabric, we used the fashioning equipment that came with the machine without changing any fashioning equipment at all, but we made this operation take place between the side edges of the fabric.

When we used the fashioning equipment for the purpose of making designs in any part in the center of the fabric, we had a straight selvage edge on the fabric. We limited the throw of the carrier by stationary stops. Those stationary stops did not come on the machine. I put on the stationary stops.

The Court: What were they put on? The carrier?

The Witness: No, sir. On the casting of the machine. Those stops were cast. They required wooden patterns; wooden models. I made the patterns. I have got those patterns here. These are the patterns that I made (indicating) both right and left. That is one pattern for a stop at the right end of the machine and one at the left end of the machine.

Mr. Darby: I offer the patterns in evidence.

(Received in evidence and marked Defendant's Exhibit N.)

Those patterns were made in 1917. The castings were made from the patterns in 1917. In order to put those stops on the machine work had to be done on the machine. We had to drill some holes to hold them in place. Mr. Drawett did the drilling of that. He was working under my supervision. He actually drilled those holes. The fixed stops were then positioned in those holes. I applied them. They were secured to the machine by means of those holes.

The drawing shown me correctly illustrates the mecha- [fol. 982] nism consisting of the full fashion equipment that came with the machine plus the fixed stops that I put on and the mechanism for moving the fashioning machine automatically in either direction.

I will now point out the reversely threaded spindles located at the opposite ends of the machine. They are at the left end of the machine, it is the spindle marked A at the right end of the machine, it is reversely-threaded spindle, marked B. The nut that moved on the left spindle is marked C and the one on the right spindle is marked D.

The fixed stop that was put on the machine at the left end of the machine, we will mark E and the stop at the right end we will mark F.

The Court: And they are shown in dashed lines on the right side and left side too?

Mr. Darby: Yes, sir.

The Court: Is part of the stop this part in the dashed lines that is above the spindle on each side?

The Witness: Yes, sir.

The Court: That is included in the stop?

The Witness: Yes.

The ground or plating carrier played against the fixed stop. We will mark that G. When the machine would knit

the fabric with the fixed stops the selvaged edge would be in a straight line. That was due to the fact that the stops were fixed.

We provided means in those stationary stops which would permit you to narrow the entire fabric, that is in case you wanted to make the width of the fabric say an inch narrower. As to this here nut, we could adjust that in or out. The nuts that I marked H.

The Court: Is that the nut?

[fol. 983] The Witness: It is connected with that. You don't want to call that a nut.

Q. 111. What do you call it? Tell me what it is?

A. This is a stop.

The Court: Adjustable screw.

Q. 112. Adjustable screw?

A. Yes.

The Court: That is what it looks like.

The Witness: Adjustable screw. One of those is provided at each end.

The Court: That, of course, had to be adjusted manually, by hand?

The Witness: Yes, you want a different size, not to waste too much material. If you adjusted it manually the selvage edge of the fabric would be the same throughout the garment.

We made a plated type design of garment with the fixed stop. Bathing suits. It was a cut and sewn garment, as distinguished from the full fashioned garment.

We would effect the plating of any place within the marginal edges of the fabric, the plating design, that is plating anywhere within the marginal edges of the fabric—with the nut C and the nut D. The carrier which was stopped by the nuts C and D was the one that carried the rayon or the face. That is it, the ground part. I will mark that J. That one would go in between the nuts.

I will indicate on the drawing the pattern chain that was employed there. There are two views of it, here is one and here is the other (indicating). The pattern chain we will mark K. And that pattern chain would through the actuating mechanism while the machine was in operation move

[fol. 984] the nuts C and D towards and away from each other. For controlling the design of fabric that was made anywhere between the selvage edges of the fabric.

Mr. Darby: I offer the drawing in evidence.

(Drawing received in evidence and marked Defendant's Exhibit O.)

The Witness: I recognized these photographs that are handed to me. They are photographs of the machine that I have just been describing. I was present when they were taken. They were taken quite recently. The fixed stops have been removed from the machine to show the holes that were drilled. I will point out on the second photograph holes that were drilled for the fixed stops.

Mr. Darby: On the second photograph. We will mark those holes A.

(I offer the photographs in evidence.)

(Photographs received in evidence and marked Defendant's Exhibit P.)

The Witness: I have samples of the work done with the machine as I changed it so as to enable me to use the original fashion, margin selvage fashioning attachment to make design between the selvage edges. I made them myself. That is plated type of work. In the trade they call sample pieces like this, swatches. These swatches were made in 1916. It will be noticed that the margin of the plated work runs parallel to the selvage edge. Those were made before we had put on the fixed stops. The only change that had been made in the machine at that time was the addition of the friction boxes that I referred to.

Mr. Darby: I offer the swatches in evidence.

(Swatches received in evidence and marked Defendant's Exhibit Q.)

[fol. 985] The Witness: Another piece of cloth which is now handed to me I made myself in 1919. That was not made in response to any order to make particular material I was just working the machine to illustrate what it would do. This has been in the possession of my company ever since I made it. These various shapes and designs were

made with the machine, made on this fabric with the nut as it came to the machine. That is, they were made with the machine as modified in accordance with my testimony. With the fixed stops at the end and using the original full fashioning equipment for making the intermediate designs.

Mr. Darby: I offer this piece of fabric in evidence.

(Piece of fabric received in evidence and marked Defendant's Exhibit R.)

The Witness: I have other random samples of fabrics that were made and sold employing the designs. I have got other samples of fabrics that were made and went into commercial bathing suits. These are samples of the various designs that went into commercial use (indicating). These fabrics were made on this same machine.

Mr. Darby: I offer the group of fabrics consisting of three separate pieces.

(Fabrics received in evidence and marked Defendant's Exhibit S.)

The Witness: Representatives of the Textile Company called to see me recently, in connection with these machines. They called more than once. I showed them the machine, and made available to them all the information at our command. I showed them samples. I offered to work the machine for them. I told them how long we had it. I gave them any information they desired.

Mr. Darby: You may examine, Mr. Howson.

[fol. 986] Cross-examination.

By Mr. Howson:

The Witness: I said that the regular business of the Nusbaum Company is the manufacture of bathing suits and underwear. Sweaters also, but in our department is only bathing suits and underwear. We had five Schubert and Salzer machines in use back in 1916 and 1917, at the time I was testifying about. We put these fixed stops on two machines. They were the same machines. On three of the machines I said we did the plating work and on two of the machines we put fixed stops. Those two machines were two of the three on which we did the plating work.

The other two machines did plain work—our regular work. Our regular work is just plain work. It is full fashioned work. In doing that work, we use for fashioning, these spindles or stops I have referred to.

I said we experienced a demand for the plating work as early as 1916, in fact, we made many orders in reference to them.

X Q. 189. And you experienced a demand for the design work which you made by the use of the fixed stops as early as 1917?

A. I made that swatch in 1917.

X Q. 180. I understood you to say in answer to Mr. Darby, that the reason you put those nuts on was because you had a demand for designs of that type which could be made?

A. Nuts? Have you reference to the nuts on the spindles?

X Q. 181. No, the fixed stops I am talking about, that you put on to utilize the machine in the making — these plated designs. How did you come to do that?

A. When did I come to do that?

X Q. 182. How—what led you to do that?

A. To make a design in the center of the garment. We had a demand for that kind of garment.

[fol. 987] At that time, that is, the trade demanded it in 1917.

We do not manufacture hosiery. These machines are not used by us in the manufacture of hosiery. First, as to the plating designs. In "plating" I mean the regular plating as distinguished from the plating designs which were made a little later, such as is illustrated in Exhibit M. We have much of this character of work, plated work. We get orders now and then. The last that I can remember is a few years back, but I cannot establish a date on it. I would say it was about two years back or so. I do not mean that we have not made any of the full plating work recently. We just get an order now and then for a few.

This garment, Exhibit N, represents a garment that was actually sold. Garments similar to that were sold. That was a sample garment. This is a full fashioned garment. In fashioning the garment we used the nuts on the threaded spindles which are a part of the original machine as it came, and that is the regular fashioning means built in as an operating part of the machine. The carrier bars that carry

the thread guides for laying the threads, travel the full width of the garment, both of them. The travel is controlled at the two ends by means which are controlled by these spindles and these nuts on the threaded spindles. There is one threaded spindle at one end of the machine and one at the other end of the machine and they are connected by a long narrow bar that runs clear across the machine. This Exhibit R does not represent a garment that was sold. That was the first stage of experiment. I dated that in 1919. I was experimenting with it in 1919, you can see there is nothing complete on it. My experiments continued a few months before I manufactured. I can't tell you when I last used those fixed stops for fixing the machine so that you could make the plated design. I could not tell you exactly when it was. It was a few years [fol. 988] ago. It has been some years ago. It was not as long ago as 1919. I think we used them within a year of 1919. It was between '19 and '20 we started to manufacture.

The Court: The question is, how long have you used, actually in practice, these actual stops you put on.

Mr. Howson: Yes.

The Witness: When the occasion arrived.

The Court: When did you quit using them entirely? You have quit using them now entirely, have you not?

The Witness: Yes.

The Court: Mr. Howson wants to know if you can recall approximately what time you quit using them.

The Witness: You see, they were used in reference to garments as the orders arrived, and of course a few years back, when we would get an order like that occasionally, we would apply them again.

X Q. 212. The best you can tell us is that it has been some years since you have used that; is that right?

A. Yes.

X Q. 213. These samples making up Exhibit S, what do they represent? I mean they are just presented here as samples. Where did these samples come from?

A. From the machine that I adjusted.

X Q. 214. When?

A. In 1917 I started to make them. I mean I made these particular things in 1917. These are some of my experiments. Some of them represent garments that were sold. in

later years. This one (indicating). In fact, all of them do. [fol. 989] We have pictures of these. These particular samples I think are some of my experimental work back in 1917.

Now, the real function and intended purpose of these nuts or stops on the threaded spindles, which are controlled by the machine, is to enable us to make on that machine a fashioned garment.

And in order to make the garment with these plated designs, we then had to use the fashioning stop for making the designs. It is correct that we cannot operate that machine in making a full fashioned garment, not in making designs.

X Q. 224. In other words, when you add the fixed stop to take care of the carrier bars at the end, at the selvage, and use the means which were really the fashioning means of the machine to control the carrier that makes the design, then you are not making a full fashioned garment?

A. No, sir. You are making a cut and sewed garment.

X Q. 225. Supposing you want to make a garment on that machine which is shaped. You would have to knit it with a straight selvage and then cut it to shape?

A. Those swatches you have there, we can run it within the width you desire from the outside selvage and parallel with the fashion and make a full fashioned garment at the same time.

X Q. 226. You are not quite answering my question. I want to know when you want to make a garment which is shaped, fashioned, and you are making the plated designs and using the fashioning stops on the machine for making the design, you use your fixed stops to control the garment at the selvage?

A. Yes. If we want to shape a garment with a plated design it is possible to knit them straight and then cut them to [fol. 990] shape. In fact, that is the only way we could shape it.

X Q. 231. That is not very desirable, is it? The cut and sewed garment?

A. Of course, it costs less than full fashioned garments.

X Q. 232. And you get less for it, don't you?

A. Yes. I mentioned in connection with this drawing, Defendant's Exhibit O, that we had certain adjusting screws marked H on the fixed stops. Those are adjustable by hand, and only to vary the fixed width of the garment that we are going to knit. I cannot say how many years ago it is we stopped using those fixed stops.

Redirect examination.

By Mr. Darby:

The Witness: I said in cross-examination that the garment, at least the sample Exhibit R, was not a plated design. That is a knit-in design. The samples of Defendant's Exhibit G, they show a plated design.

(Mr. Darby hands exhibit just referred to to the Court.) Those are types of plating.

The Court: Yes, I see.

The Witness: Both types of work were done on the same machine.

I am familiar with the advertisements of my company.

I am familiar with the work that was put out to fill the demand created by the advertisements. My attention is called to a book and I can state that it is an advertisement book of D. Nusbaum and Company's merchandise. I notice that the last advertisement runs up to April, 1929, as appears in this book. I can identify the garment advertised [fol. 991] there as one made on our machine. Both of these (indicating). That is on the page dated April 10, 1929, page 44 in blue.

My attention is called to the advertising appearing on page 35 under date of September, 1928. I recognize the garment there shown. That was made on our machine. I made that myself. That was not a fashioned garment. It was plated. That was made on the machine that I have described in the court room today.

My attention is called to the advertising appearing on page 27, advertis-ment in the knitted sportswear Retailer of June, 1928. I recognize that garment. That was made by me on that machine. That is not a fashioned garment.

My attention is called to the one on page 23 under date of April, 1928. That garment with its design was made by me. That was not a full fashioned garment. It was made on this machine I have described.

My attention is called to the advertisement appearing in the Daily News article of Wednesday, March 21, 1928, appearing on page 21 of this book, and to the bathing suit shown on the right-hand side of the page, and the various bathing suits shown on that page. Two of them are of a design pattern. I made those bathing suits—before that

day. Yes, we made some before that day also. They were made on this same machine that I have described in the court room.

The same is true of the design bathing suit shown on page 20 of the book, being an advertisement from Sweater News in Knitted Outwear, March, 1928. That was made by me on this machine. With reference to the particular design, I can state as to whether or not that was an adaptation of the design which is included in the specimens Defendant's Exhibit S. This is an instance where we had adapted one of our earlier designs.

[fol. 992] My attention is called to the advertisement on page 19. That is a plated design made on the machine I have described here.

The Witness: My answers are the same with respect to the advertisements appearing on pages 19, 16, 15, 13, 12, 9 of this book.

Mr. Darby: I offer in evidence pages 9, 12, 13, 15, 16, 19, 20, 21, 23, 27, 35 and 44 of this book of advertisements, with the understanding that I may substitute photographic copies of them rather than the book.

(Book received in evidence and marked Defendant's Exhibit T.)

The Witness: I notice that in the Defendant's Exhibit O in the drawing there are three thread carrier rods. The machine did not come with three carrier rods. It came with two. I supplied the third carrier rod. In answering one of the questions asked me by Mr. Howson I understood him to ask me whether or not the spindles A and B were connected together across the machine. They were not connected together.

Mr. Darby: That is all.

The Court: The witness did say that. I don't know whether he understood Mr. Howson's question.

Recross-examination.

By Mr. Howson:

R. X Q. 276. Well, evidently I mislead you?

A: Yes.

R. X Q. 277. In asking that question, and I should perhaps have put it this way, that in order to control the two

separate spindles at either end of the machine there must be a control bar or bars which I marked on Exhibit O with the letter X which extend the full length of the machine?

[fol. 993] A. Yes, sir; that controls the spindles.

R. X Q. 278. Now, in this scrap book of advertisements which has been offered as Exhibit T it is my understanding that all of the garments to which Mr. Darby called your attention at different pages are they plating designs or plain selvage garments and not fashioned garments?

A. All of them. You would have to show me—I wouldn't answer that question, that is, in the blind.

R. X Q. 279. All right. Pick out any garment there.

A. Full fashioned garment?

R. X Q. 280. Among the pages which Mr. Darby called to your attention which are full fashioned garments and have your plating designs put in by these fashioning stops. Do you want to know the pages you referred to?

A. A garment like this on page 21 is a full fashioned garment and also——

—. ——.

A. This here also on page 44, only the one. I think that is about all.

(After a short recess.)

Mr. Howson: That is all.

Redirect examination.

By Mr. Darby:

R. D. Q. 282. Let me ask you just one more question, please. In the questions that Mr. Howson asked you pertaining to the use of the identical stops that you put on and which are shown as fixed stops H in the drawing Defendant's Exhibit O, did you subsequently make additional stops of different constructions?

A. This is the kind we are using now. But we are still using machines with fixed stops.

But it is these particular stops H that we disconnected several years ago, or a number of years ago. They are only used for plating.

[fol. 994] By permission of the Court I wish to modify——

On page 44, in reference to what you asked me——

"Is it a full fashioned garment?"

It is full fashioned up until the armhole, and then there is a special armhole.

Mr. Darby: That is all.

FRED DRAWERT, called and sworn as a witness on behalf of the defendant, testified as follows:

Direct examination.

By Mr. Darby:

The Witness: My age is thirty-two years. I live at Jamaica, L. I. I am employed by Nusbaum Knitters, Inc. I have worked for Nusbaum, or its predecessor since 1915. First I started as an errand boy. Then I became a machinist's helper. While I was working as a machinist's helper, I did some work on a knitting machine in altering its construction. It was a Schubert and Salzer full fashioned machine. The machine was used for knitting full fashioned bathing suits. As to the work I did on the machine, I will state that I put the stationary stops on the outside. I bored holes in the machine and threaded them and bolted the stationary stops on.

I recognize the photographs shown in Defendant's Exhibit P. They show where I drilled the holes. This is a photograph of the machine I drilled the holes on. Referring to the second photograph, I can identify the holes I drilled. They are right there, marked A. I did that work right before this country went into war. I fix the time as follows: At that time there were mostly Englishmen working in that department, and at that time with every package [fol. 995] of cigarettes you got a small flag, about that size (indicating). About four inches. And I had a German flag hanging up in the machinist department where I was working. I wasn't German, but I was of German descent. I was born in this country. And when I was drilling them parts on the machine there the English fellows and I used to be arguing about the war. And when I was drilling them parts the English fellows would always say, "Here is the

bloody Dutchman now." I recall it was while I was drilling those holes that that happened. It was while I was working on that machine. We entered the war, and then the flag came down. There was no more "Dutchman."

I recognize those pieces of wood marked Defendant's Exhibit N. They are the wooden models for the outside stops. I know who made them; Mr. Boch made them. I saw him making them. Castings were made of these stops. I did not have anything to do with them. I bolted them on the Schubert and Salzer machine. I saw the machine operate after that. I recognize this particular piece of fabric, Defendant's Exhibit R. But that has no connection with those stops. I recognize this fabric. I saw it made. Mr. Boch was making it. When I saw him doing this I was working on a machine at that time, working as a knitter. I was just starting on plain full fashioned work. That was in 1919. Mr. Boch was on the machine opposite me, in the next aisle.

Mr. Darby: That is all.

Cross-examination.

By Mr. Howson:

The Witness: The argument continued with the English fellows all the while. I did other work on those machines, besides boring those holes.

Mr. Howson: That is all.

[fol. 996] FERDINAND NUSBAUM, called on behalf of the defendant, being duly sworn, testified as follows:

Direct examination.

By Mr. Darby:

My age is forty. I reside at Jamaica, Long Island. I am head of the Nusbaum Company. I started work there in 1906 in a managerial capacity. The company was originally formed by my father in 1906. I am familiar with the machinery and equipment employed in my factory. We make bathing suits, underwear, tights and garments of that nature.

I am familiar with the Schubert and Salzer machines concerning which Mr. Boch has testified in this case. I am

familiar with the modifications to the machines that he made. I have my original records as to when Mr. Boch and Mr. Drawert entered my employ. I will read from those original records when they entered our employ respectively; Mr. Boch, March 2, 1907; Mr. Drawert, May 7, 1915. Mr. Boch was made foreman January, 1916.

Mr. Drawert became a knitter, as distinguished from an apprentice, in 1919.

As an errand boy, we paid him four dollars a week salary; as an apprentice——

The Court: I think he said he was a machinist's helper, wasn't he, after he was an errand boy?

Mr. Darby: Machinist's helper, yes, that is what I meant.

The Witness: First, let me say this, there is nothing on the card here to show definitely that he changed his work from one kind to another excepting the increase in wages. That shows that in 1917 he was raised to eight dollars a week. At that time he was spending more time as a machinist's helper. As a knitter he started with $15.

[fol. 997] I am familiar with this varied design sample, Defendant's Exhibit R. I saw that fabric being made. It was made in 1919. This sample since it was made has been in the department in the care of Mr. Boch.

I am familiar with the garment, Defendant's Exhibit M, bathing suit. That is a type of garment that we manufactured and sold. I have original records showing sales of a garment of that character. Here is one of 1917 as an example which tells how many garments were sold, to whom and the date. It shows a sale of about two dozen to Marshall Field, order taken October 31, 1917, shipment made February 13, 1918. The garment differed from the one there in being a two-color garment instead of a one-color garment. It was a plated garment. There were stripes running through it, either end stripe or similar stripes. But it was plated.

Mr. Darby: I offer in evidence the original record. I would like to make a similar request that we substitute a photographic copy of it.

(Received in evidence and marked Defendant's Exhibit U.)

I have additional records of the same type of sales prior to 1920.

This book, Defendant's Exhibit T, is a record of our advertisements. Those records are in my charge. I can say as to the accuracy of the records appearing on the various dates as to the date of the advertisement attached to each page that they are accurate. In most instances the advertisements are dated, either on the advertisement itself or in ink on the advertisement. I extracted this or had this book extracted from the files of our company and made available in this case.

I was present at my factory when representatives of the Textile Machine Works, the plaintiff in this case, came to [fol. 998] our factory to inspect our equipment. They asked my permission to be shown the equipment. I gave them that permission. I told Mr. Boch to tell them anything they asked.

Cross-examination.

By Mr. Howson:

The Witness: There was not any particular reason why I shouldn't do that.

As to whether there is anything on Defendant's Exhibit U which identifies the particular garment that I refer to, I will say there is on the confirmation from the customer there is a description fiber and mercerized. That does mean that it was a full plated garment of the order of plating exemplified in Exhibit M. That is the only way that we use those yarns, in combination. It was plated all the way across and on this it also says full fashioned, showing that it could not have had the plated design. I would not say showing that it could not, but that particular style, we sold so many of that particular style that I know exactly what the garments were, and they were plated all over.

X Q. 44. I think Mr. Darby referred you to an invoice of 1920.

Mr. Howson: Did you?

Mr. Darby: No, I said prior to 1920. That is the only invoice he testified about. He has got plenty more there if you want them.

X Q. 45. May I look at those? (Papers handed to counsel.) Well, these other invoices that you said you had prior to 1920, do they relate to the same type of garment as this one, Exhibit U?

A. Those invoices do (indicating). I have an invoice of one garment made similar to that, one at the end, whatever it is.

[fol. 999] X Q. 46. Similar to Exhibit Q. What is the date of that?

A. That is May, 1918.

X Q. 47. Were you asked to look for any invoice that had to do with a garment having plated designs of the order illustrated in Defendant's Exhibit S?

A. I don't remember that I was asked for invoice for those things. I was asked for invoices as early as possible, that is invoices of plated garments as early as possible, and I brought some of the earliest invoices I could find.

X Q. 48. I see. May I see that card that you had in telling how much these men were paid? (Card handed to counsel.) Is this in your handwriting?

A. No, sir.

X Q. 49. Do you have anything to do with *the* keeping these records personally?

A. No.

Redirect examination.

By Mr. Darby:

The Witness: I was asked on cross-examination about the swatches, Defendant's Exhibit Q. I know when those swatches were made. They were made the end of 1916 or beginning of 1917.

Nusbaum & Company purchased the Schubert and Salzer machines with other equipment at the time of its organization in 1906. To my knowledge, that machine has been in our possession since that time.

This book that is handed to me is also a record of our advertisements beginning in June, 1923.

My attention is called to an advertisement on page 22 of this book, likewise on page 23 and page 24 and shown perhaps best on page 25, referring particularly to the leg portion of the bathing suit there shown. I know what machine that bathing suit was made on. That was made on one of [fol. 1000] the Schubert and Salzer machines. It was on a 21-gauge machine. That is one of the machines that was modified by Mr. Boch. That is, the machine that made that piece of work was modified. I am familiar with the modification that was made by Mr. Boch. The machine was the one with the fixed stops that produced that design in the

leg of the bathing suit shown on that page. I am going to say to the best of my knowledge, it is because I know that we have fixed stops on several machines but this type, if it is this type of work that you referred to, it can be made with fixed stops and would be made that way, in our factory.

The advertisements in this book were likewise kept by me and produced from our original files of my records.

At subsequent pages of the book I notice, for example, at page 67, under date of May 1, 1925, there is what is termed "Pearl Shell" bathing suits. That type of bathing suit was plated all the way through exactly the same principle as that sample, Defendant's Exhibit M.

Mr. Darby: I offer in evidence pages 22, 23, 24, 25, 26 and page 67 of the book identified by the witness and I call the Court's attention to the type and the date. What we are referring to is the stripe down the middle of the leg portion. This shows a larger view on page 25, and shows it on the pants alone on page 26. These were all in 1924. And the other page 67, this is the "Pearl Shell" completely plated, June, 1925 (indicating).

The Court: The book had better be marked.

Mr. Howson: I should perhaps object to the offer insofar as the documents may be intended for use as evidence of the truth or accuracy of any statements of fact contained [fol. 1001] therein on the ground that they are not competent evidence of such fact.

The Court: I think that is so, they are purely illustrations to illustrate the testimony of the witness. They are admitted for that purpose only.

Mr. Darby: I would hate to have it stay on the record just that way. The purpose of these advertisements is to show that on those dates a good many of them are photographs, at least by those dates the garments there shown had been manufactured and were offered for sale.

The Court: Well, the witness has testified to that. That is illustrating the witness's testimony, to that extent it is evidence because he says that that was the garment made, sold and made on these machines, as I understand it.

Mr. Darby: Yes.

(Book received in evidence and marked Defendant's Exhibit V.)

Mr. Howson: No questions.

The Court: That is all.

[fols. 1002-1006] DEFENDANT'S EXHIBIT Q-1

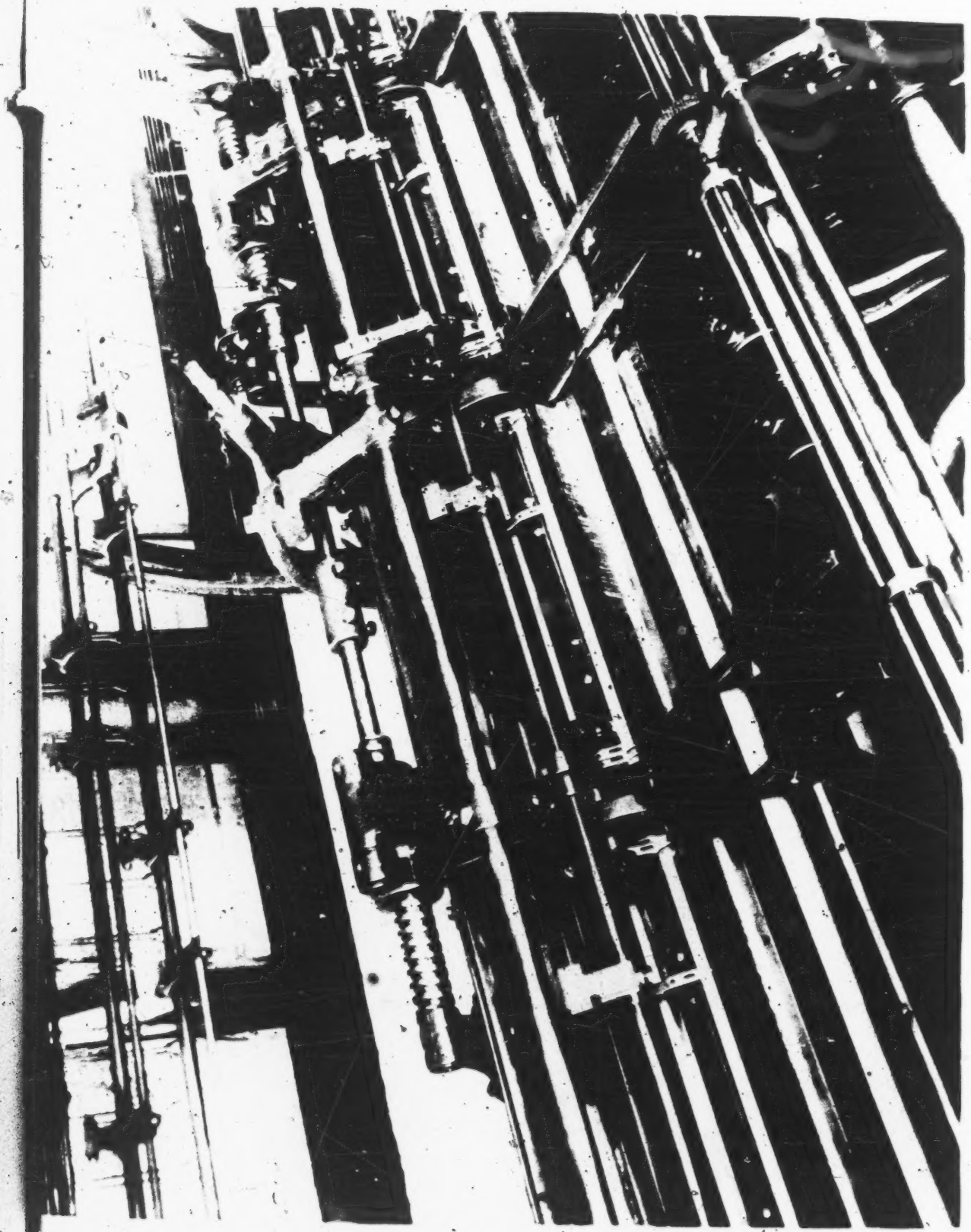

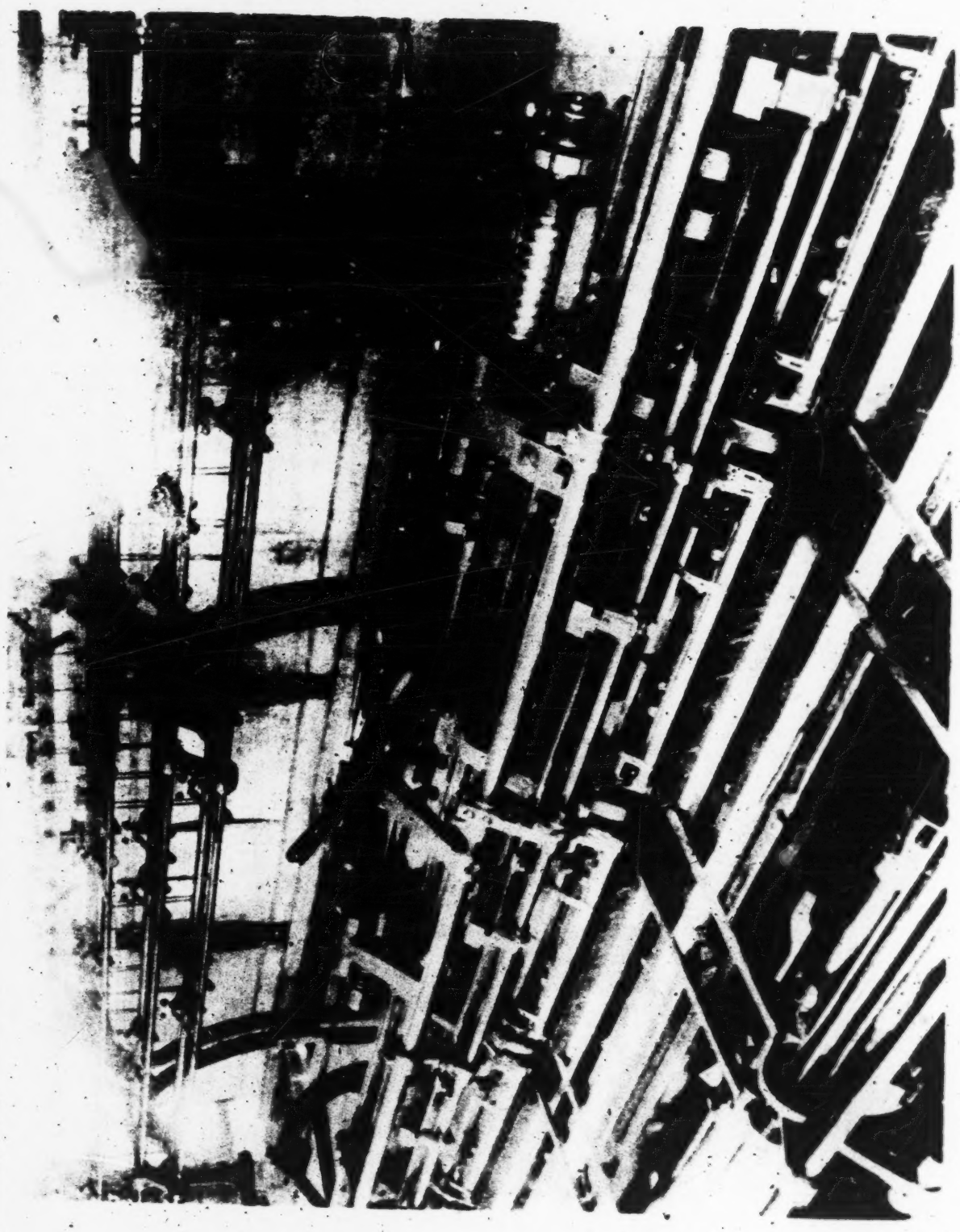

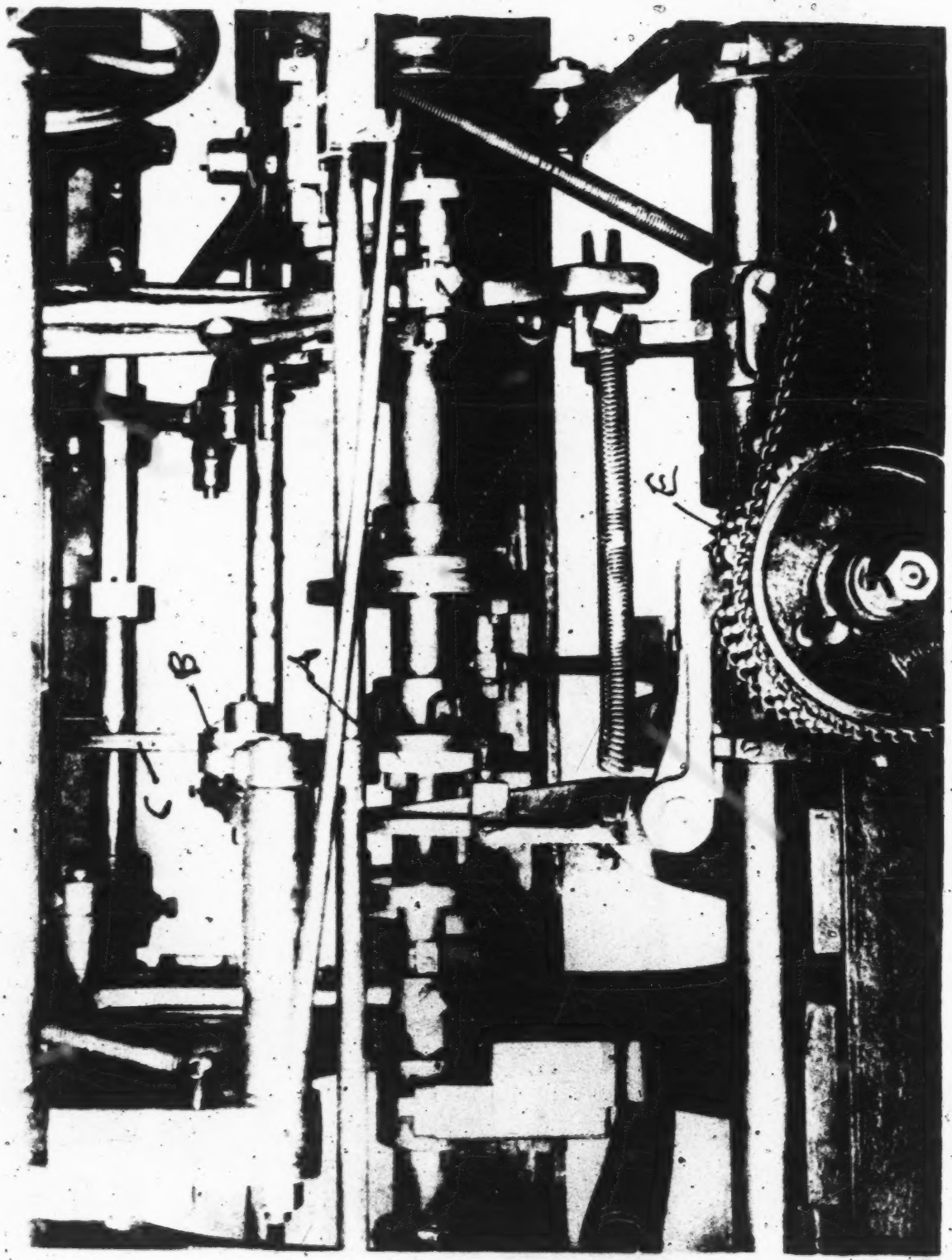
B
A
C
E

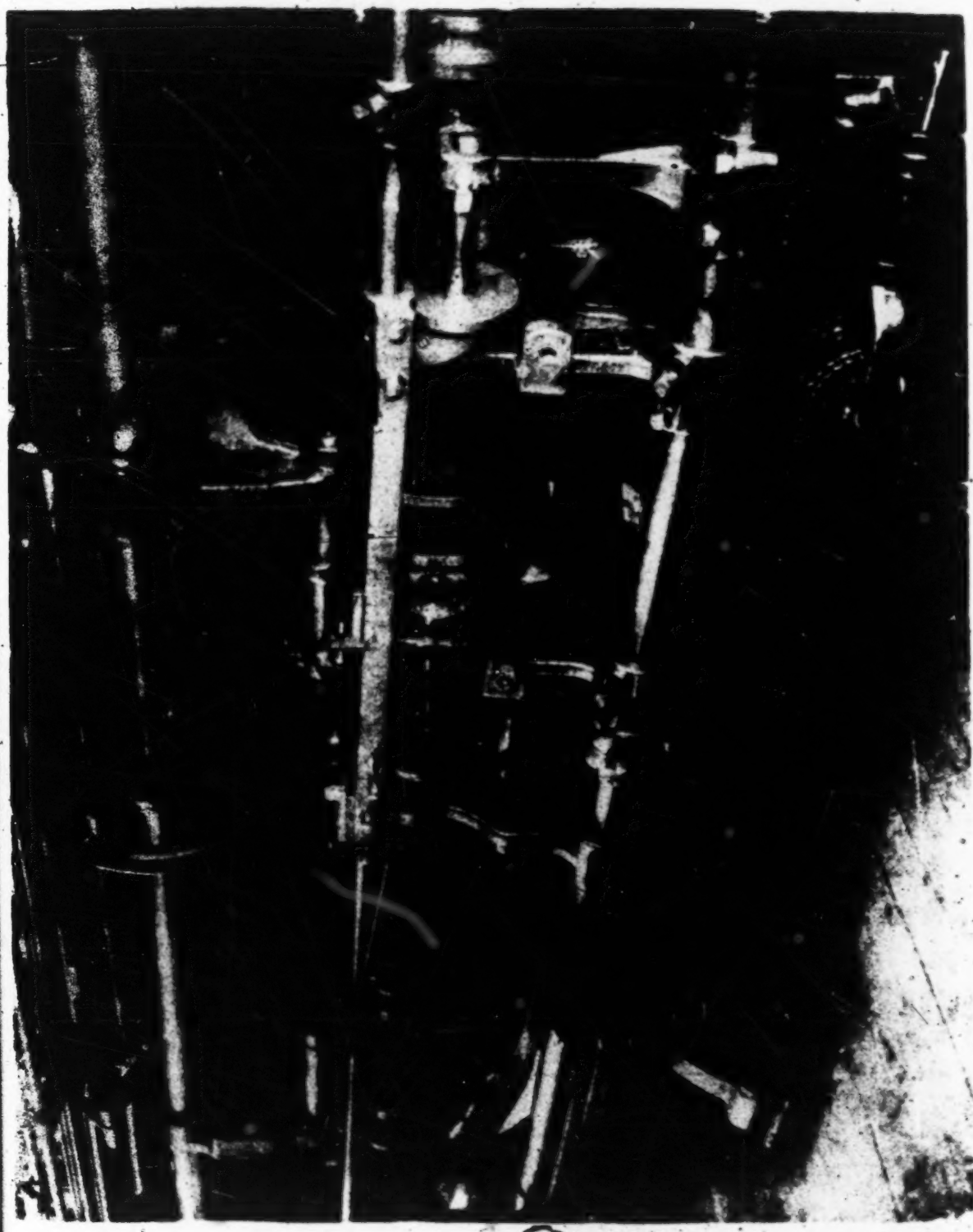

[fols. 1007-1010]

DEFENDANT'S EXHIBIT V-1

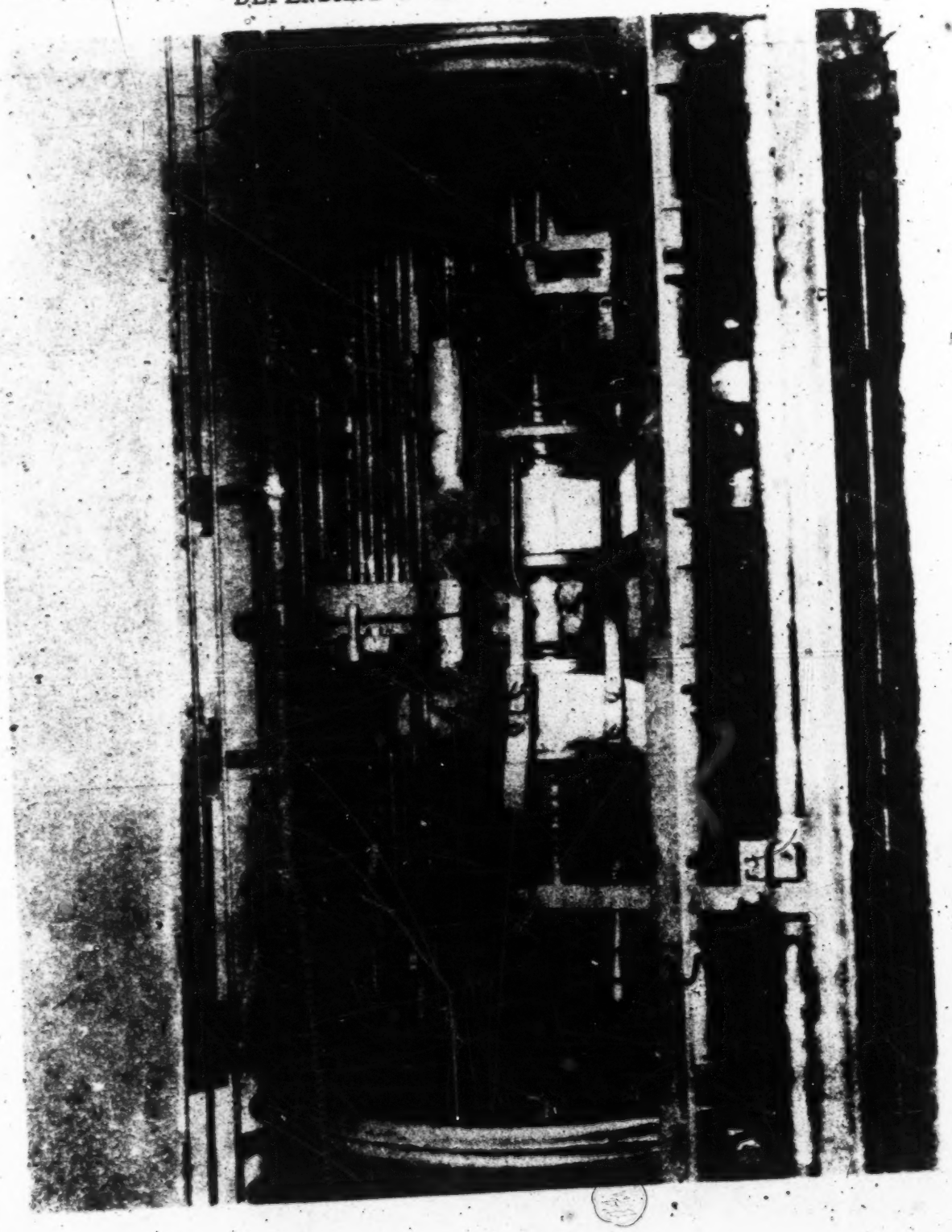

827

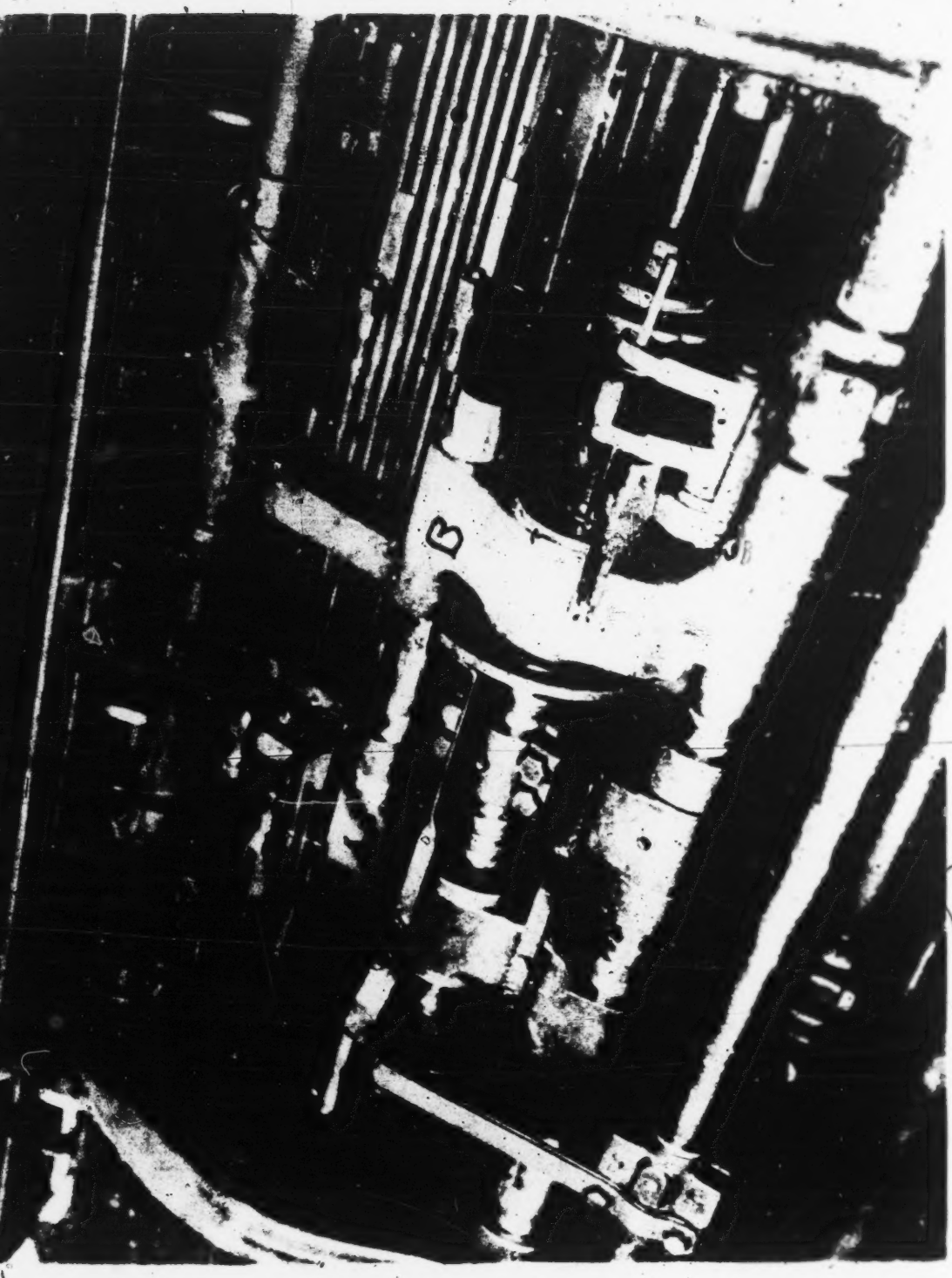
B

[fols. 1011-1019]

DEFENDANT'S EXHIBIT Y-1

830

RIGHT END REAR PERSPECTIVE

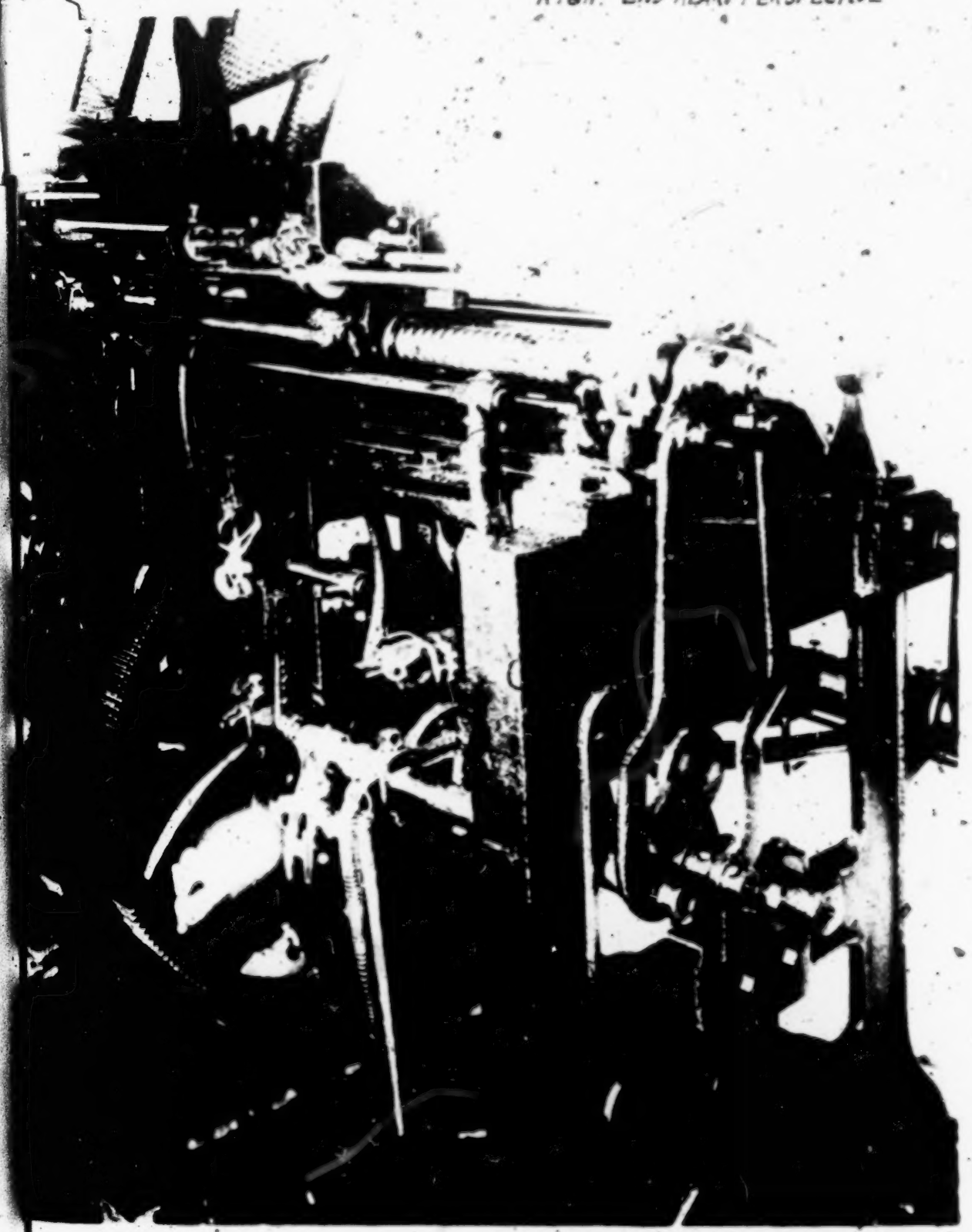

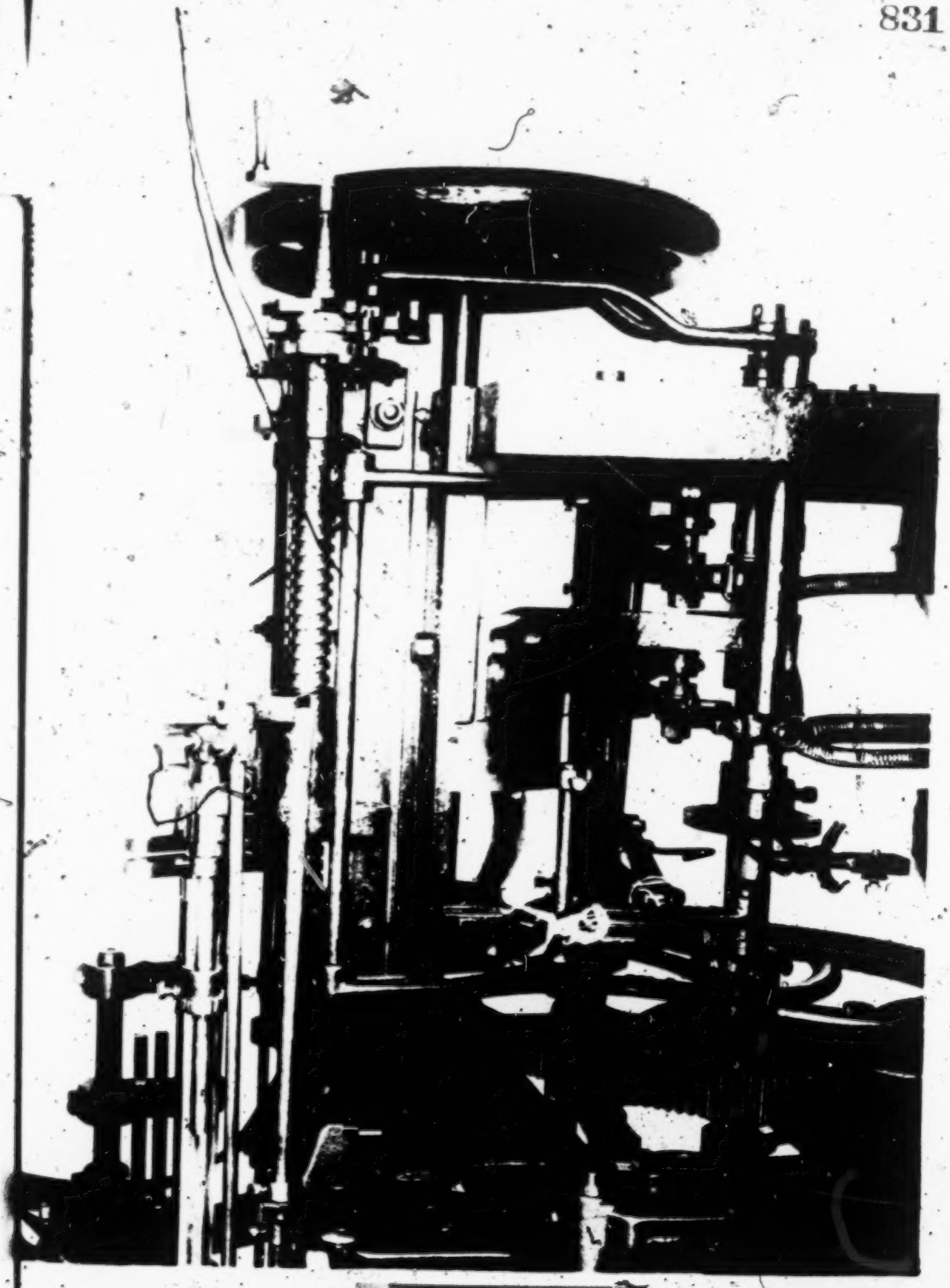

Page Tightly Bound

3

RIGHT END REAR

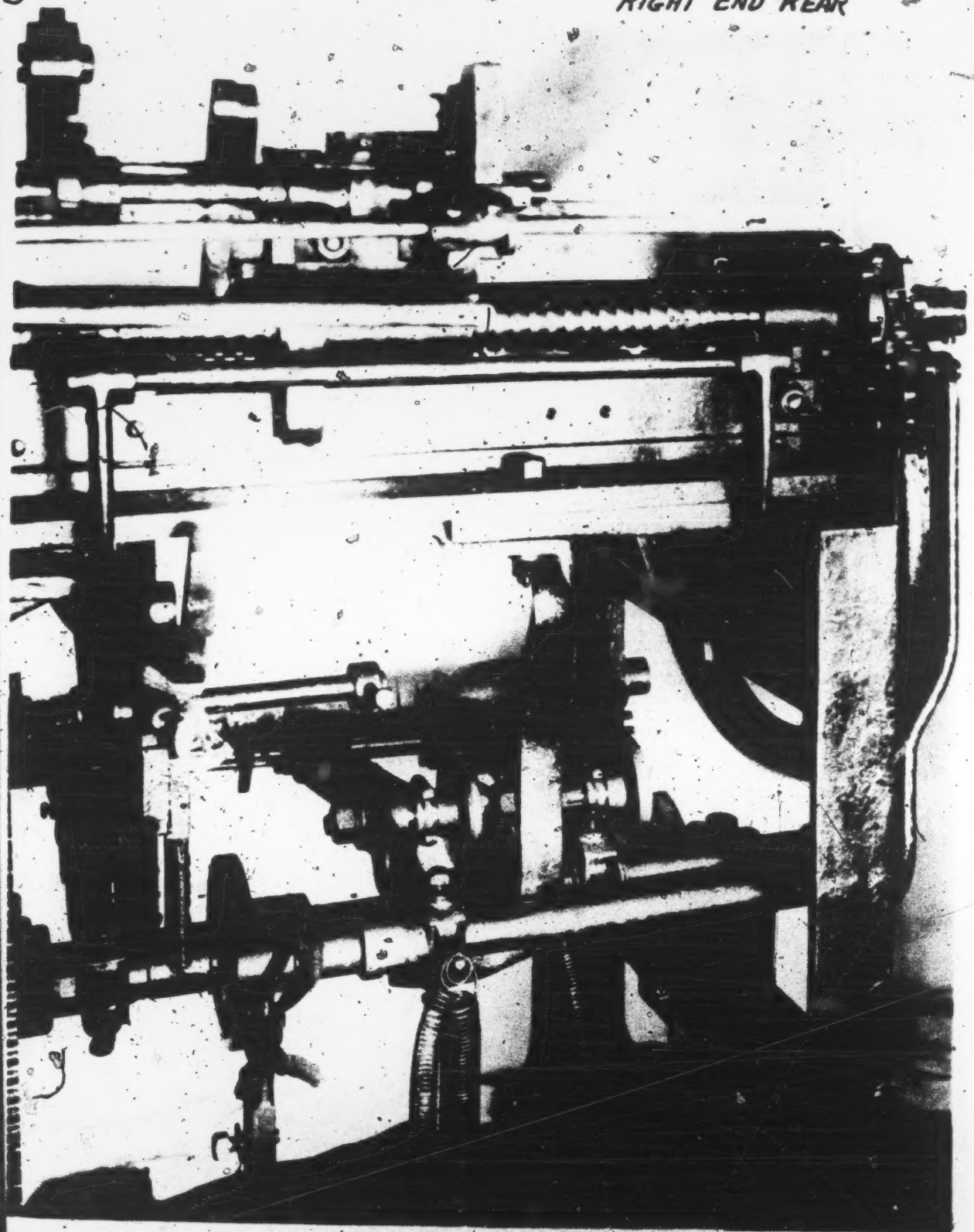

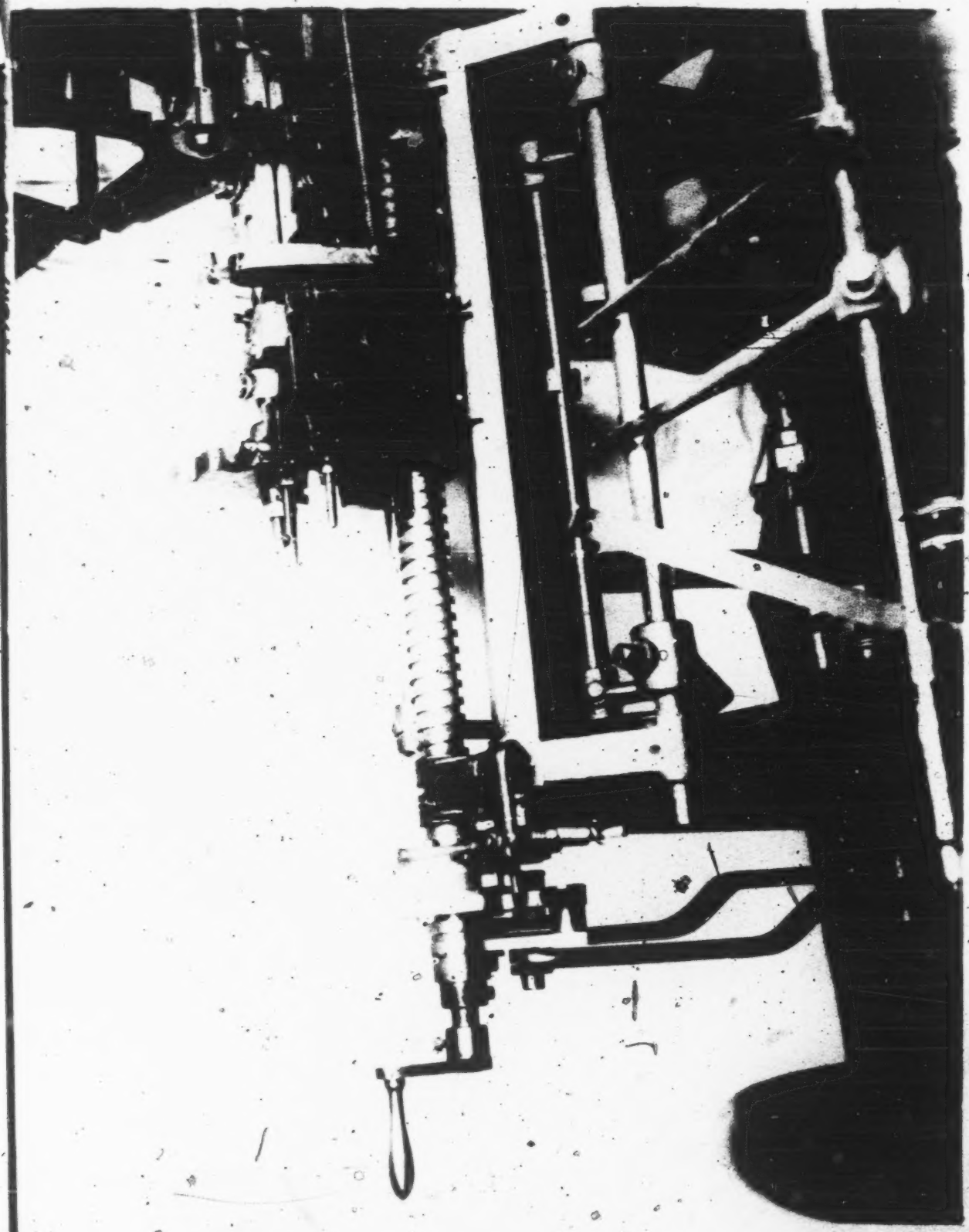

Page Tightly Bound

LEFT END VIEW

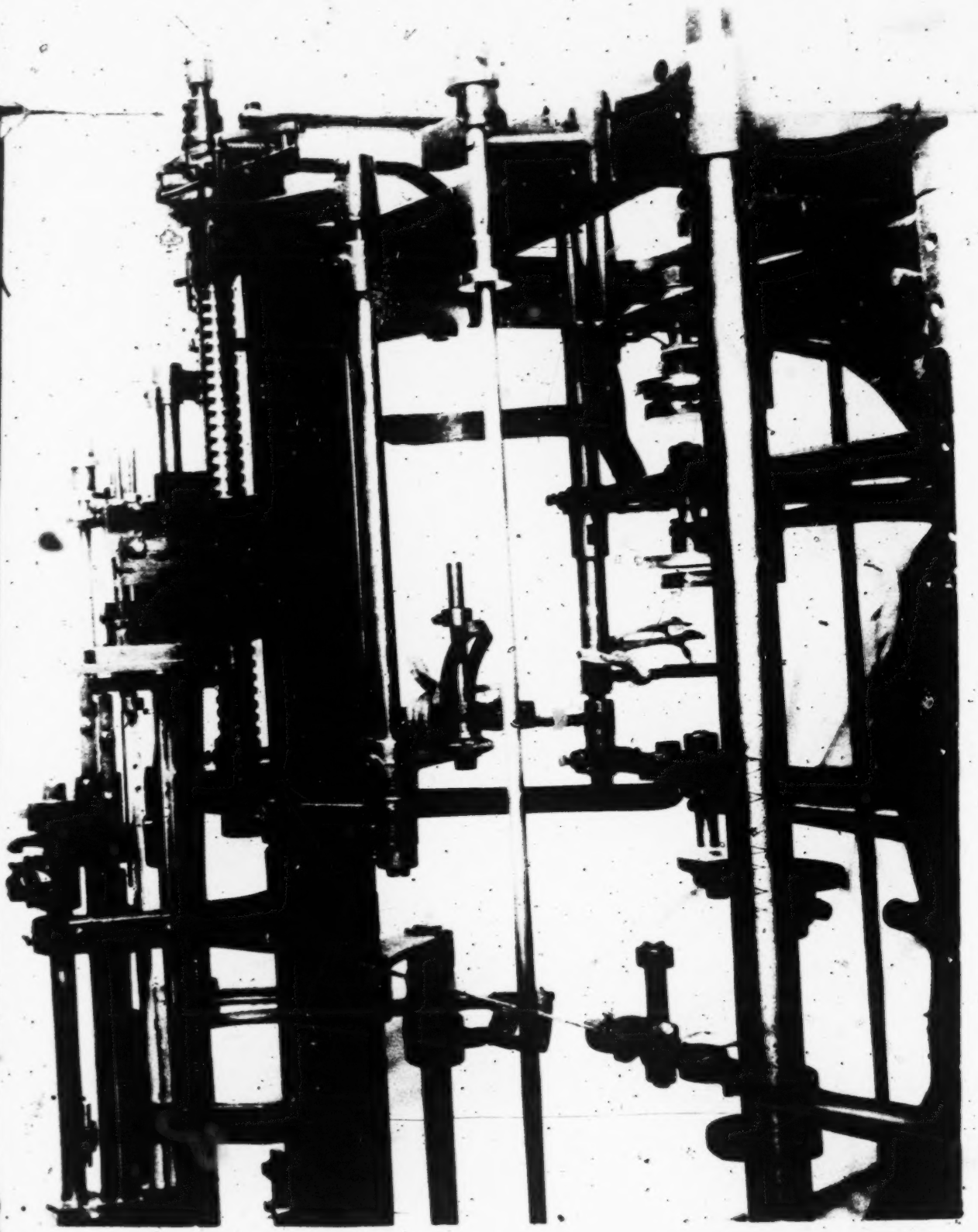

Page Tightly Bound

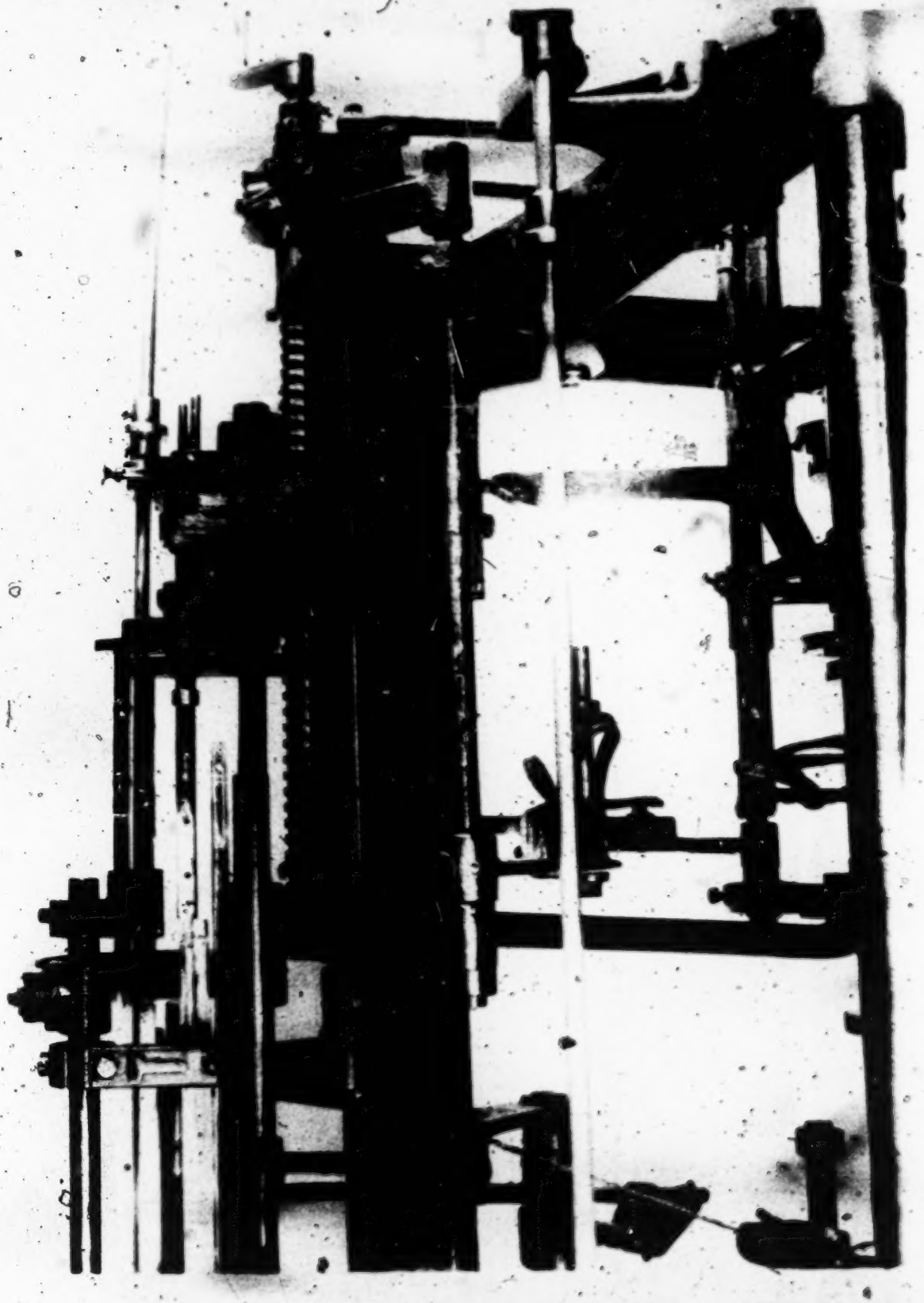

Page Tightly Bound

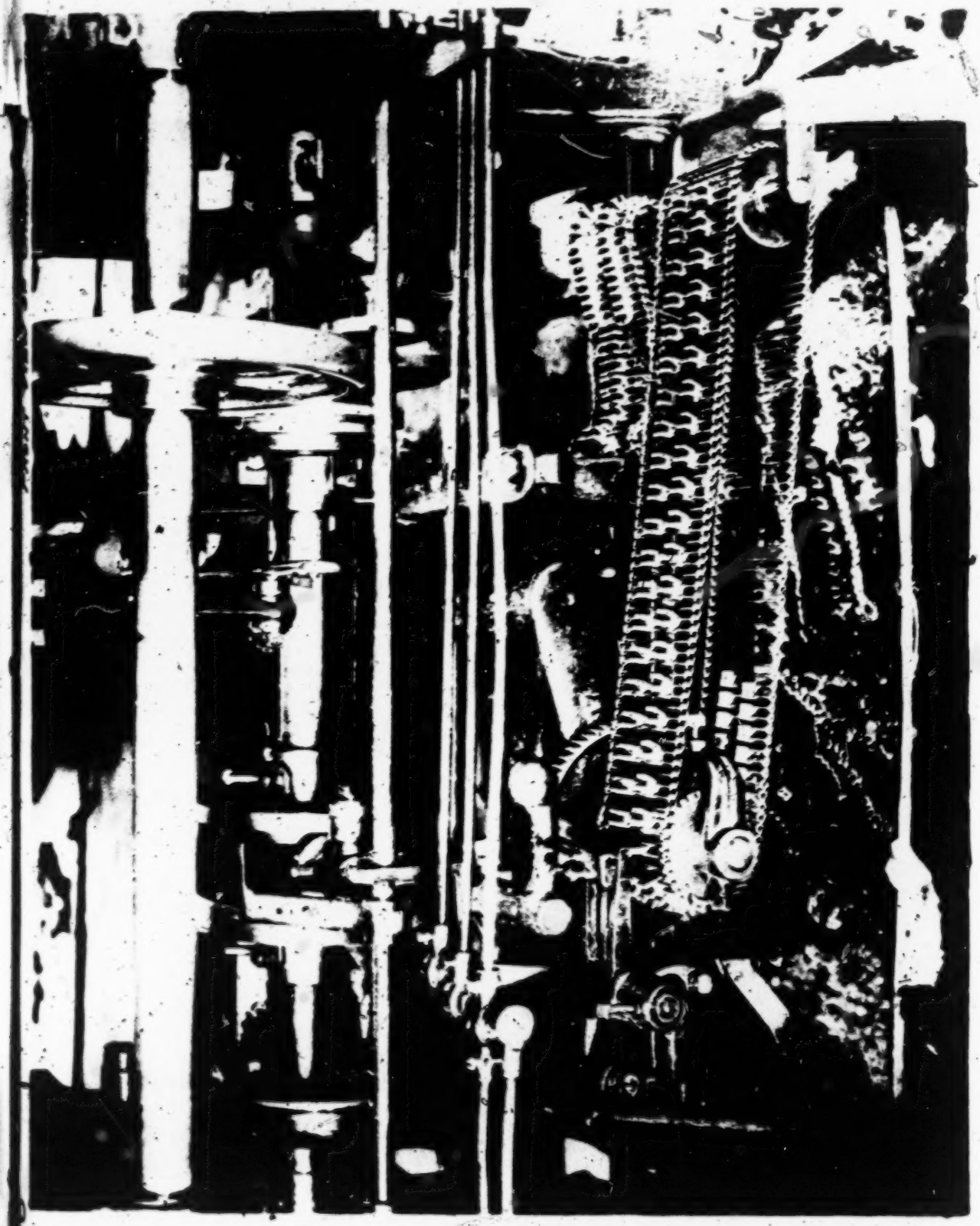

Page Tightly Bound

PERSPECTIVE VIEW OF FRONT OF MR

#9

#10 FRONT VIEW SHOWING KNITTING

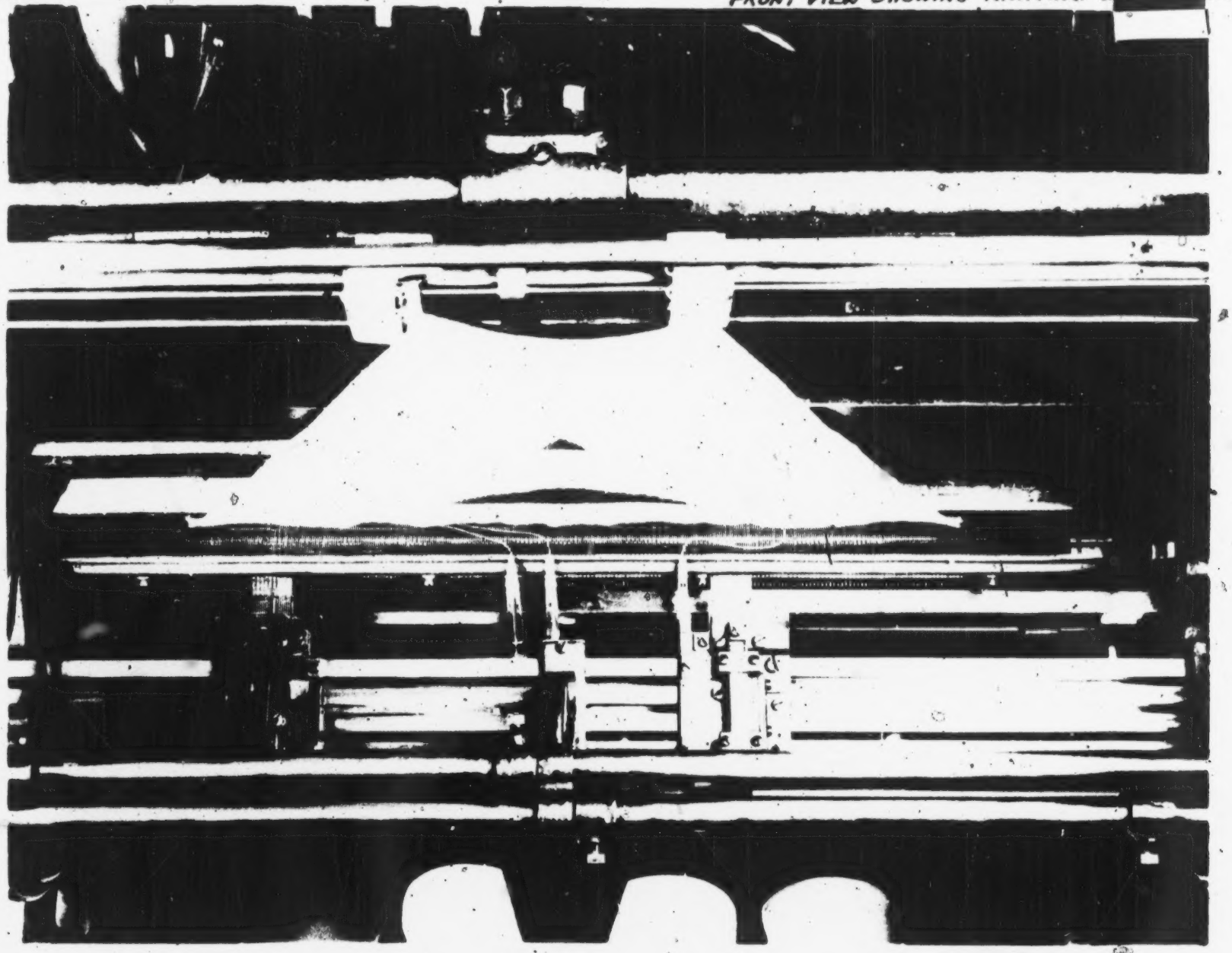

Defendants Exs B-B

IN THE SUPREME COURT OF THE UNITED STATES

TEXTILE MACHINE WORKS,
Petitioner.
vs.
LOUIS HIRSCH TEXTILE MACHINES, INC.,
Respondent.

Oct. Term
1937
No. 62

Defendant's Exhibit T-1 referred to
in Stipulation of July 15, 1937

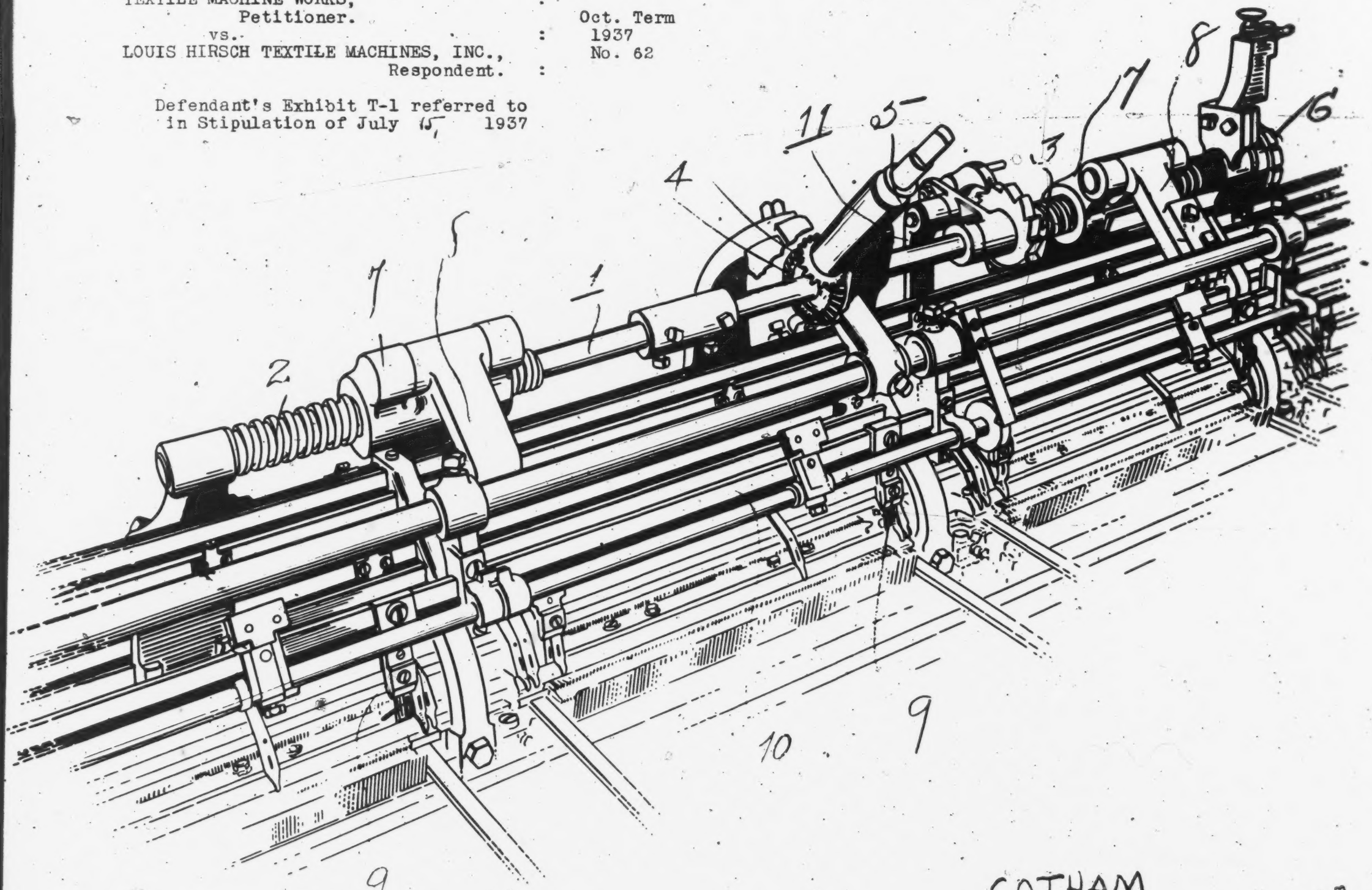

GOTHAM

13.0

Fig. 1

Defendants
Ex C
3/24/32
G

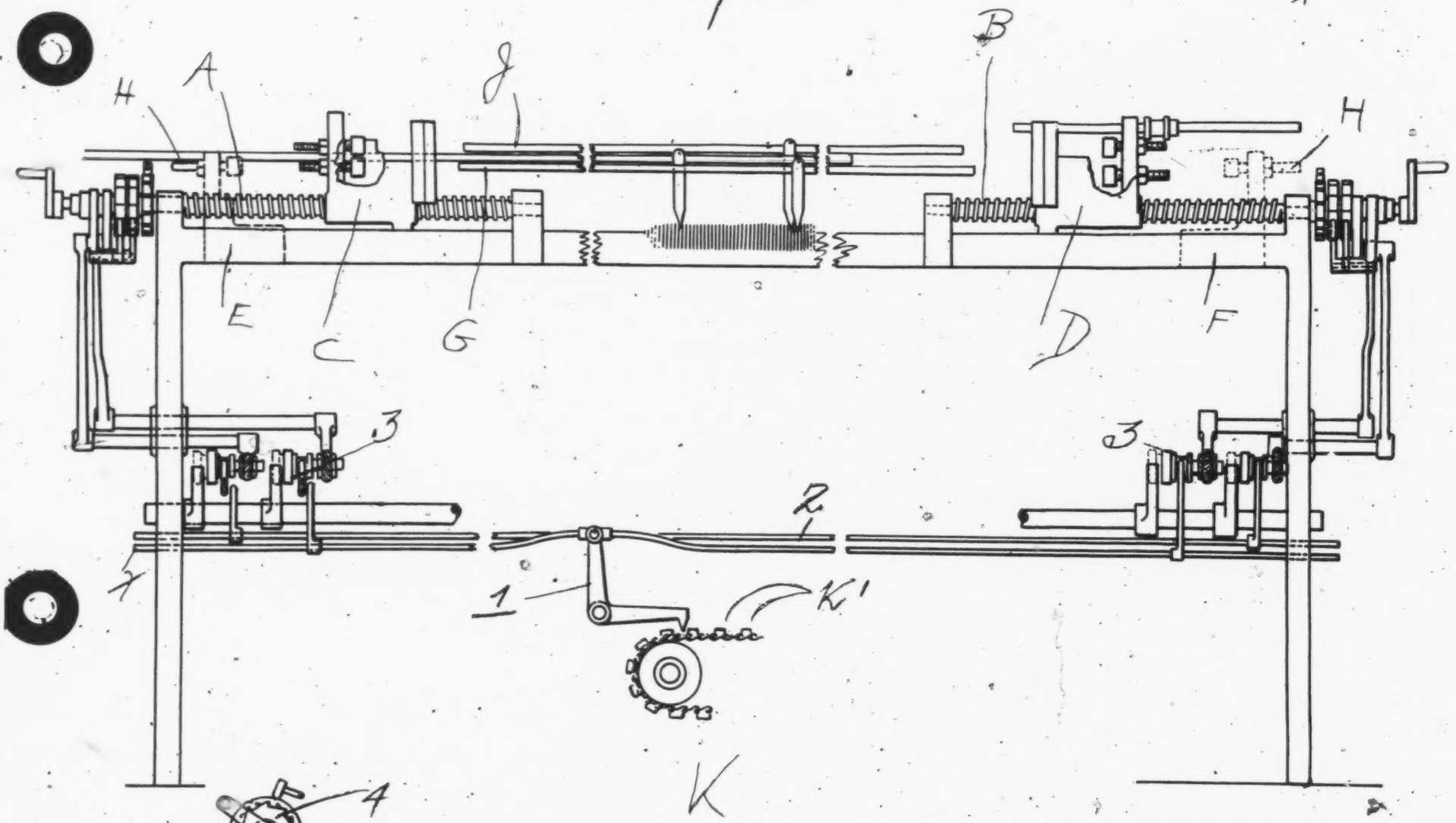

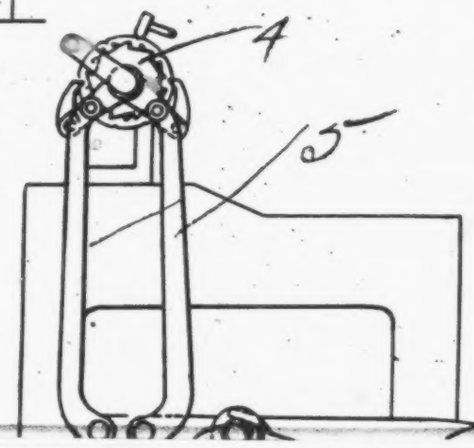

Fig 2

IN THE SUPREME COURT OF THE UNITED STATES

TEXTILE MACHINE WORKS, Petitioner.	:	Oct.Term
vs.	:	1937
LOUIS HIRSCH TEXTILE MACHINES, INC., Respondent.	:	No. 62

[fol. 1022] Clerk's certificate to foregoing transcript omitted in printing.

[fol. 1023] [File endorsement omitted.]

Endorsed on cover: File No. 41,533. U. S. Circuit Court of Appeals, Second Circuit. Term No. 62. Textile Machine Works, petitioner, vs. Louis Hirsch Textile Machines, Inc. Petition for a writ of certiorari and exhibit thereto. Filed May 14, 1937. Term No. 62, O. T., 1937.

(784)

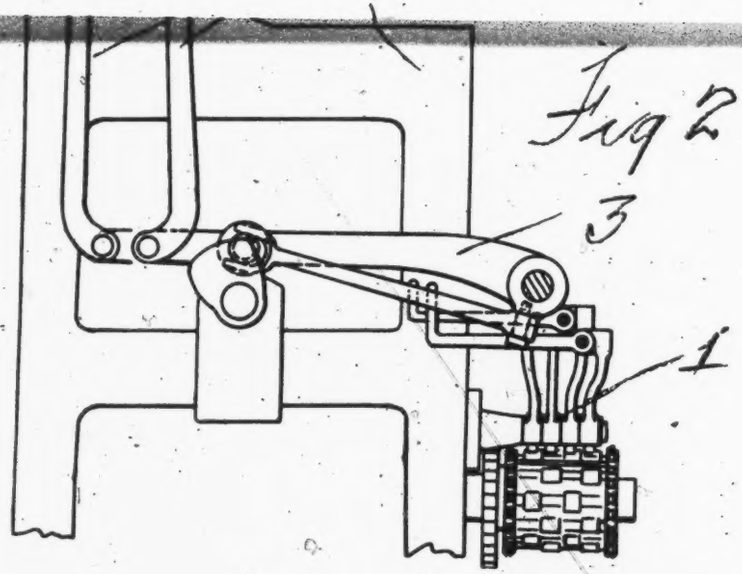

IN THE SUPREME COURT OF THE UNITED STATES

TEXTILE MACHINE WORKS,
Petitioner.
vs.
LOUIS HIRSCH TEXTILE MACHINES, INC.,
Respondent.

Oct. Term
1937
No. 62

Defendant's Exhibit B-2 referred to in Stipulation of July 13, 1937.

1021

FILE COPY

Office-Supreme Court, U. S.
FILED
MAY 14 1937
CHARLES ELMORE CROPLEY
CLERK

No. [redacted] 62

IN THE

SUPREME COURT OF THE UNITED STATES

October Term, 1936.

TEXTILE MACHINE WORKS,
Petitioner,

vs.

LOUIS HIRSCH TEXTILE MACHINES, INC.,
Respondent.

Petition for Writ of Certiorari and Brief in Support thereof.

HUBERT HOWSON,
Counsel for Petitioner.

Lawyers' Book Printing Co., 825 Walnut St., Phila., Pa., Walnut 3781.

SUBJECT INDEX.

	Page
PETITION	1
SUMMARY STATEMENT OF THE MATTER INVOLVED	2
REASONS FOR GRANTING THE WRIT	5
BRIEF	6
OPINIONS OF THE COURTS BELOW	6
JURISDICTION	6
STATEMENT OF THE CASE	6
SPECIFICATION OF ERRORS	7
ARGUMENT	7
CONCLUSION	9

INDEX OF CASES CITED.

	Page
Bates vs. Coe, 98 U. S., 31	9
Carnegie Steel Co. vs. Cambria Iron Co., 185 U. S., 404	9
Diamond Rubber Co. vs. Consolidated Company, 220 U. S., 428	8
Hobbs vs. Beach, 180 U. S., 383 (392)	8
National Cash Register Co. vs. Boston Cash Indicator & Recorder Co., 156 U. S., 502 (514)	8
Topliff vs. Topliff, 145 U. S., 156	9
Webster Loom Co. vs. Higgins, 105 U. S., 508	9
H. C. White & Co. vs. Morton E. Converse & Son Co., 20 Fed. (2nd), 311	8

STATUTES CITED.

Sec. 240 (a) of Judicial Code (28 U. S. C. A. 347)	6

IN THE

Supreme Court of the United States

October Term, 1936.

TEXTILE MACHINE WORKS,
Petitioner,

vs.

LOUIS HIRSCH TEXTILE MACHINES, INC.,
Respondent.

PETITION FOR WRIT OF CERTIORARI.

To the Honorable Chief Justice and the Associate Justices of the Supreme Court of the United States:

Your Petitioner, Textile Machine Works, prays for a Writ of Certiorari to the United States Circuit Court of Appeals for the Second Circuit to review a judgment of that Court entered in this suit on February 1, 1937 (Rec. p. 927, Vol. II). Petition for rehearing was later filed (Rec. p. 933, Vol. II) and was denied March 2, 1937 (Rec. p. 945, Vol. II). A certified transcript of the Record in the case, including the proceedings in said Circuit Court of Appeals, has been filed herewith in compliance with Rule 38 of the Rules of this Court.

Summary and Short Statement of the Matter Involved.

This is a suit in equity brought by Petitioner against Respondent in the United States District Court for the Southern District of New York for infringement of Claims 1, 3, 14 and 15 of Letters Patent No. 1,713,628, issued May 21, 1929, for an Attachment for Flat Knitting Machines.

Respondent in its Answer raised numerous defenses, attacking the patent for insufficiency of disclosure, anticipation, lack of invention in view of certain prior commercial structures, lack of utility, etc.; and also denied infringement. The suit came on for trial before the District Court (Walter C. Lindley, J.), and after an extended trial, the Court rendered its opinion (Rec. p. 877, Vol. II), overruling all of the defenses, sustaining the validity of the patent, and a decree was entered awarding injunction and reference for an accounting (Rec. p. 915, Vol. II).

On appeal to the Circuit Court of Appeals for the Second Circuit, that Court reversed the decree of the District Court and ordered the dismissal of the Bill on the ground of invalidity of the claims in suit for want of invention in view of two devices previously in use, referred to in the case as the "Gotham" attachment and the "Nusbaum" device. The Court's opinion is printed at Record, p. 927, Vol. II.

Prior to the trial of the instant suit, the patent in suit had been sustained by the United States District Court for the District of New Jersey and by the United States Circuit Court of Appeals for the Third Circuit in a suit brought by Petitioner against Alfred Hofmann, Inc. In the Hofmann suit the defendant had raised substantially the same defenses above referred to, including the defense of lack of patentable invention in view of the "Gotham" and "Nusbaum" prior uses. The case was fully tried before the District Court (John Boyd Avis, J.), and that Court rendered its opinion sustaining the patent as to the

claims in suit, namely Claims 1, 3, 14 and 15 (the same claims subsequently involved in the Hirsch suit at bar) and finding infringement (opinion 4 Fed. Suppl. 837). Decree was duly entered in accordance with the opinion. Upon appeal by the defendant, Alfred Hofmann, Inc., to the United States Circuit Court of Appeals for the Third Circuit, that Court affirmed the decree. (For opinion, see 71 Fed. (2nd) 973.) The defense of lack of invention, overruled in the Hofmann suit in the Third Circuit and sustained in the instant case in the Second Circuit, was the same defense in both cases,—the evidence with respect to the "Gotham" and "Nusbaum" prior uses being stipulated into the instant case from the record in the Hofmann case. (See stipulation Rec. p. 23, Vol. I.) The Court of Appeals in the Second Circuit refused to follow the decisions in the Third Circuit involving the same patent, the same claims of that patent, and substantially the same record so far as concerns the said particular defenses. There is thus a clear case in which "a circuit court of appeals has rendered a decision in conflict with the decision of another circuit court of appeals on the same matter".

As appears from the opinion of the Circuit Court of Appeals in the instant case, that Court having reached the conclusion that the claims in suit are invalid for want of invention, found it unnecessary to pass on the other defenses which had been overruled in the Third Circuit but again presented to the Courts of the Second Circuit in the instant case.

The invention is an attachment for full-fashioned hosiery machines whereby hosiery knitted on such machines may be provided with ornamental designs known as "clocks" and the like. Illustrations of this work may be seen at Rec. pp. 518-523, Vol. II. The claims in suit cover combinations of the essential mechanical elements of the attachment and cooperating parts of the knitting machine.

The "Gotham" prior use device was an attachment for use in the full-fashioned hosiery machine for supplying hosiery with a certain type of reinforcement. This device employed some of the elements of the combination of the patent in suit, but differed therefrom in purpose, functioning of the parts, mode of operation and in results.

The "Nusbaum" prior use device was a machine for making underwear and bathing suits (not hosiery). It was employed for making a limited class of designs on garments, but by means inherently incapable of application to the full-fashioned hosiery machine, and it fell far short of meeting the combinations of the patent in terms or in substance.

The attachment of the patent in suit has had an unusual record of commercial success, and is recognized in the industry as a valuable adjunct to the full-fashioned hosiery machine.

In the litigation in the Third Circuit (the Hofmann suit) both the District Court and the Court of Appeals overruled the defense of lack of invention in view of "Gotham" and "Nusbaum" and sustained the patent.

In the instant suit in the Second Circuit (the Hirsch suit) the District Court also overruled the defense, but the Court of Appeals reached the opposite conclusion and found lack of invention in view of "Gotham" and "Nusbaum".

In finding lack of invention in view of "Gotham" and "Nusbaum", the Court of Appeals in the instant case sought to combine two unrelated devices which could not be combined, and were such combination possible, the resulting hypothetical device would still be incapable of accomplishing most of the work for which the attachment of the patent in suit has proved of value. Under these circumstances, the selection and combining of separate elements from different prior structures to render noninventive the patentee's device is believed to be contrary

to the weight of authority and to the applicable decisions of this Court.

Reasons for Granting the Writ.

The discretionary power of this Court is invoked upon the following grounds:

1. The decision of the Circuit Court of Appeals for the Second Circuit is in real and direct conflict with a decision of the Circuit Court of Appeals of the Third Circuit on the question of validity of the same claims of the same patent.

2. The decision of the Circuit Court of Appeals of the Second Circuit in the instant case appears to be in conflict with the weight of authority and the applicable decisions of this Court on an important question of patent law.

Wherefore, your Petitioner respectfully prays that a Writ of Certiorari be issued to the United States Circuit Court of Appeals for the Second Circuit, to the end that this cause may be reviewed and determined by this Court; that the judgment of the Circuit Court of Appeals be reversed; and that Petitioner be granted such other and further relief as may be proper.

Hubert Howson,
Counsel for Petitioner.

BRIEF IN SUPPORT OF THE PETITION FOR WRIT OF CERTIORARI.

Opinions of the Court Below.

The opinion of the District Court for the Southern District of New York, written by Judge Lindley, appears at page 877 of Volume II of the Record. It is reported in 13 Fed. Suppl., page 476. The opinion of the Circuit Court of Appeals for the Second Circuit (Circuit Judges Learned Hand, Swan and Augustus N. Hand), written by Judge Learned Hand, appears at page 927 of Volume II of the Record. It is reported in 87 Fed. (2nd), page 702.

The opinion of the District Court for the District of New Jersey in the Hofmann suit, written by Judge Avis, is reported in 4 Fed. Suppl. page 837. The opinion of the Circuit Court of Appeals for the Third Circuit in the Hofmann suit (Circuit Judges Buffington, Woolley and Davis), written by Judge Buffington, is reported in 71 Fed. (2nd), page 973.

Jurisdiction.

The jurisdiction of this Court is invoked under Section 240(a) of the Judicial Code as amended by the Act of February 13, 1925; c. 229 (28 U. S. C. A., Sec. 347).

The decree of the Circuit Court of Appeals which Petitioner seeks to have reviewed was entered February 1, 1937, (Rec. p. 927, Vol. II). Thereafter a Petition for Rehearing was filed, which was denied on March 2, 1937, (Rec. p. 945, Vol. II).

Statement of the Case.

The essential facts of the case are stated in the accompanying Petition for Writ of Certiorari and need not be repeated here.

Specification of Errors.

If the Writ of Certorari is issued, Petitioner intends to urge that the Circuit Court of Appeals for the Second Circuit erred:

1) In holding Claims 1, 3, 14 and 15 of the patent in suit invalid for want of invention;

2) In reversing the decree of the District Court holding the patent in suit as to Claims 1, 3, 14 and 15 thereof valid and infringed;

3) In failing to affirm the decree of the District Court holding the patent in suit as to Claims 1, 3, 14 and 15 thereof, valid and infringed.

Argument.

1. The patent in suit is valid.

On the full-fashioned machine stockings are knit in the form of flat blanks, which blanks are doubled and sewed to form the stockings.

In this type of knitting machine (for a general view see Rec. p. 558, Vol. II) the yarn is delivered to the needles through yarn guides mounted on reciprocatory carrier bars. These bars are illustrated at 6 in Fig. 2 of the patent in suit (Rec. p. 495, Vol. II). Each carrier bar carries one guide for each section of the machine throughout its length, and the total reciprocating movement of the carrier bars is approximately the width of a single section, the extent of movement being controlled by adjustable stops at the ends of the machine.

Whereas in the ordinary operation of the knitting machine, the yarn guides are controlled only by the end stops and lay the yarn over the full width of the fabric being knitted, that is, from selvage to selvage, the purpose of the attachment is to furnish accurate control for yarn guides *laying a yarn over a distance less than the full*

length of a course being knitted; and this is done for laying in the extra yarn to form the designs such as those illustrated in the pictures on pages 518-523, Vol. II, Rec.

The attachment as covered by the claims in suit involves, in combination with the reciprocating yarn guide carrier bars of the full-fashioned machine, a pair of stops for the carrier bars (these stops being auxiliary stops as distinguished from the regular end stops on the machine); a reversely threaded spindle for moving the stops toward and from each other; means for turning the spindle in either direction; pattern-controlled means for determining the time of operation of the spindle; and pattern-controlled means for determining the direction of rotation.

As stated in the petition, neither the "Gotham" device, nor the "Nusbaum" device, alone or together, met the claims in suit, nor did they meet the purposes or accomplish the results of the patented attachment.

(a) The patentee of the patent in suit produced a new combination, and thereby provided for the full-fashioned hosiery machine, for the first time in the history of the art, a simple efficient, new attachment for accomplishing a wide variety of work never before accomplished by any single device. The new combination involved novel functions for such elements as were old and the accomplishment of new results.

Cases supporting the claim to patentable invention under these circumstances are Diamond Rubber Co. vs. Consolidated Company, 220 U. S., 428; National Cash Register Co. vs. Boston Cash Indicator & Recorder Co., 156 U. S., 502 (514); Hobbs vs. Beach, 180 U. S., 383 (392); H. C. White & Co. vs. Morton E. Converse & Son Co., 20 Fed. (2nd), 311.

(b) As stated in the petition, the Court of Appeals found lack of invention by piecing together elements from

non-related prior devices. Cases opposed to this practice are Bates vs. Coe, 98 U. S., 31; Topliff vs. Topliff, 145 U. S., 156; Carnegie Steel Co. vs. Cambria Iron Co., 185 U. S., 404; Webster Loom Co. vs. Higgins, 105 U. S., 508.

That the Courts of Appeal of the Second and Third Circuits are in direct conflict on the question of the validity of the patent in suit; as to the same claims (1, 3, 14 and 15); on the identical issue of patentable invention, and on substantially the same evidence is clear from what has already been pointed out in the petition.

Conclusion.

We submit that the question in conflict between the Courts of Appeal is one which should be resolved by this Court, and it is urged that the petition for a Writ of Certiorari be granted.

Respectfully,

Hubert Howson,
Counsel for Petitioner.

FILE COPY

Office - Supreme Court, U. S
FILED
OCT 12 1937
CHARLES ELMORE CROPLEY
CLERK

IN THE

SUPREME COURT OF THE UNITED STATES

No. 62. October Term, 1937.

TEXTILE MACHINE WORKS,
Petitioner,

vs.

LOUIS HIRSCH TEXTILE MACHINES, Inc.,
Respondent.

On Certiorari to the Circuit Court of Appeals for the Second Circuit.

PETITIONER'S BRIEF.

HUBERT HOWSON,
CHARLES H. HOWSON,
DEXTER N. SHAW,
WILLIAM A. SMITH, JR.,
Counsel for Petitioner.

Lawyers' Book Printing Co., 825 Walnut St., Phila., Pa., Walnut 3781.

INDEX.

	Page
Opinions of the Courts Below	1
Jurisdiction	2
Statement of the Case	2
Patent in Suit	5
The Full-Fashioned Knitting Machine	6
The Yarn Guide Carrier Bars	7
Narrowing	8
The Schletter Attachment	10
What the Attachment Does	12
Commercial History of the Patented Attachment	14
The Claims in Suit	15
The Gotham Device	17
The Nusbaum Machine	18
Opinion of the Court of Appeals (R. II, p. 769)	19
Summary of Argument	19
Argument	21
I. The Gotham device was not an anticipation of the patent in suit	21
II. As compared with the Gotham device, the attachment of the patent in suit represents a real invention	21
III. The Nusbaum machine was not an anticipation of the claims in suit and it did not approach the Schletter invention	28
IV. The Court of Appeals was in error in combining, or attempting to combine, "Gotham" and "Nusbaum" to defeat the claims of the patent in suit	30
V. The commercial history of the attachment of the patent in suit negatives the plea of lack of invention	32

Page

Other Defenses 36

A. Alleged Insufficiency of Disclosure 36

B. Alleged Inoperability of the Device of the Patent in Suit 39

(1) Failure of the patent in suit to show narrowing cams 39

(2) Omission of mechanism for lifting or taking stops 7 out of operation 40

C. Invalidity for Alleged Anticipation by One or More of Sundry Pleaded Prior Patents 41

D. Invalidity of the Patent in Suit for Alleged Want of Commercial Utility 42

E. Alleged Delay in Filing a Disclaimer 44

F. Infringement 46

Conclusion 48

Appendix A—Opinion — Avis, J. — Textile Machine Works vs. Alfred Hofmann, Inc. (D. C., N. J.) 4 Fed. Suppl., 837 49

Appendix B—Opinion — Buffington, J. — Alfred Hofmann, Inc. vs. Textile Machine Works (C. C. A. 3rd), 71 Fed. (2nd), 973 58

Appendix C—Discussion of Prior Patents Advanced by Defendant as Anticipations 60

TABLE OF AUTHORITIES CITED.

	Page
Aluminum Colors, Inc. v. U. S. Research Corp., 7 Fed. Suppl. 609	44, 45
American Bell Telephone Co. v. Spencer, 8 Fed., 509	44
Barber v. Otis Motor Co., 231 Fed., 755 (762)	47
Bates v. Coe, 98 U. S., 31 (48)	42
Bay State Optical Co. v. Klein, 20 Fed., (2nd), 915	45
Burden v. Corning, 4 Fed. Cases, 701 (710)	44
Bragg-Kliesrath v. Farrell, 36 Fed. (2nd), 845	24
Carnegie Steel Co. v. Cambria Iron Co., 185 U. S., 403, 437	40
Diamond Rubber Co. v. Consolidated Co., 220 U. S., 428	24, 25
Ensten v. Simon Ascher Co., 282 U. S., 445	45
Gamewell Fire Alarm Tel. Co. v. Municipal Sig. Co., 77 Fed., 490	44
Hobbs v. Beach, 180 U. S., 383 (392)	22
Imhaeuser v. Buerk, 101 U. S., 647 (660)	42
Lowell v. Triplett, 77 Fed. (2nd), 556	45
Malina v. Grisman, 20 Fed. (2nd), 406	47
Nat'l Cash Reg. Co. v. Boston Cash Indicator Co., 156 U. S., 502 (514)	22
Paramount Publix Co. v. American Tri-Ergon Corp., 294 U. S., 464 (474)	36
Permutit v. Wadham, 13 Fed. (2nd), 454	45
Sam'l B. Smith v. E. H. Snow, et al., 294 U. S. 1	48
Sirocco Eng. Co. v. B. F. Sturtevant Co., 209 Fed., 624	44
Stebler v. Riverside Heights Asso., 205 Fed., 735 (739)	47
Temco Electric Co. v. Apco Mfg. Co., 275 U. S., 319	24, 47
Textile Mach. Works v. Alfred Hofmann, Inc. (C. C. A., 3rd), 71 Fed. (2nd), 973	2
Textile Mach. Works v. Alfred Hofmann, Inc. (D. C. N. J.), 4 Fed. Suppl., 837	2
Thropp & Sons v. DiLaski, 226 Fed., 941 (947)	24
Topliff vs. Topliff, 145 U. S., 156	21

TABLE OF AUTHORITIES CITED (Continued).

	Page
Trussell Mfg. Co. v. Wilson-Jones Co., 50 Fed. (2nd), 1027 (1030)	44
United Chromium, Inc. v. Internat'l Silver Co., 60 Fed. (2nd), 913	45
Webster Loom Co. v. Higgins, 105 U. S., 580 (586)	38, 40
Westinghouse Co. v. Precise Corp., 11 Fed. (2nd), 209	48
White Co. v. Converse & Son, 20 Fed. (2nd), 311	22
Worden v. Searls, 21 Fed., 406	44
Wright Co. v. Herring-Curtiss Co., 211 Fed., 654, 655 (C. C. A. 2nd)	48
Zell v. Bankers' Utilities Co., 77 Fed. (2nd), 22	44

STATUTE CITED.

Section 240 (a) of the Judicial Code as amended by the Act of February 13, 1925, c. 229 (28 U. S. C. A., Sec. 347)	2

TEXT BOOKS.

Walker on Patents (6th Ed.), 496, Sec. 409	47

IN THE

Supreme Court of the United States

October Term, 1937. No. 62.

TEXTILE MACHINE WORKS,
Petitioner,

vs.

LOUIS HIRSCH TEXTILE MACHINES, INC.
Respondent.

BRIEF ON BEHALF OF TEXTILE MACHINE WORKS, PETITIONER.

This is a patent infringement suit in equity in usual form brought here on certiorari to the United States Circuit Court of Appeals for the Second Circuit.

Opinions of the Courts Below.

The opinion of the Circuit Court of Appeals for the Second Circuit (Circuit Judges Learned Hand, Swan and Augustus N. Hand) written by Judge Learned Hand, appears at R. II, 769. It is reported in 87 Fed. (2nd), 702. The opinion of the District Court for the Southern District of New York, written by Judge Lindley, appears at R. II, 787. It is reported in 13 Fed. Suppl., 476.

The opinion of the Circuit Court of Appeals for the Third Circuit (Circuit Judges Buffington, Woolley and

Davis) written by Judge Buffington, in a suit involving the same patent and referred to herein as the Hofmann suit, is reported 71 Fed. (2nd), 973. Copy annexed as Appendix B. The opinion of the District Court for the District of New Jersey in the Hofmann suit, written by Judge Avis, is reported 4 Fed. Suppl., 837. Copy annexed as Appendix A.

JURISDICTION.

The jurisdiction of this Court is invoked under Section 240 (a) of the Judicial Code as amended by the Act of February 13, 1925; c 229 (28 U. S. C. A., sec. 347). The decree of the Circuit Court of Appeals for the Second Circuit was entered February 8, 1937 (R. II, 774). Petition for re-hearing was denied on March 2, 1937 (R. II, 775). The Petition for Writ of Certiorari herein was filed May 15, 1937, and granted June 1, 1937.

STATEMENT OF THE CASE.

Petitioner (plaintiff in the District Court and appellee in the Court of Appeals—hereinafter referred to as Plaintiff) is Textile Machine Works, a Pennsylvania corporation, manufacturer of full-fashioned knitting machines, with its plant at Reading, Pennsylvania. Respondent (defendant in the District Court and appellant in the Court of Appeals—hereinafter referred to as defendant) is Louis Hirsch Textile Machines, Inc., a New York corporation with a principal place of business at New York City. Defendant is the American sales representative of Karl Lieberknecht, a manufacturer of knitting machines in Germany. The devices (attachments for full-fashioned knitting machines) charged to infringe were originally manufactured in Germany and imported here by the de-

fendant. Defendant is now manufacturing the attachments here and selling them in connection with the imported knitting machines.

Defendant in the Hofmann suit was the American sales representative of another German manufacturer of knitting machines. The defendants in the two cases have cooperated in their effort to destroy the patent,—the defendant in this case having contributed to the defense of the former suit, and the Hofmann Company, defendant in the former suit, contributing to the defense of this suit,—the defendant's counsel in both cases being the same (R. I, 227).

The patent in suit is No. 1,713,628, issued May 21, 1929, on the application of Richard E. Schletter, of Philadelphia, for an Attachment for Flat Knitting Machines. The claims involved are Claims 1, 3, 14 and 15.

The Bill of Complaint is in usual form (R. I, 1). Defendant in its Answer (R. I, 5-11) raised numerous defenses, attacking the patent for insufficiency of disclosure, anticipation, lack of invention in view of certain prior commercial structures, lack of utility, etc.; and also denied infringement. The case came on for trial before the District Court (Walter C. Lindley, J.), and after an extended trial, the Court rendered its opinion (R. II, 737), overruling all defenses, sustaining the validity of the patent, and a decree was entered awarding injunction and reference for an accounting (R. II, 762).

On appeal to the Circuit Court of Appeals for the Section Circuit, that Court reversed the decree of the District Court and ordered the dismissal of the Bill on the ground of invalidity of the claims in suit for want of invention in view of two prior-use devices coupled together —referred to in the case as the "Gotham" attachment and the "Nusbaum" device. (Opinion R. II, 769).

Prior to the trial of the instant case, the patent in suit had been sustained by the United States District Court

for the District of New Jersey and by the United States Circuit Court of Appeals for the Third Circuit in a suit brought by petitioner against Alfred Hofmann, Inc. In the Hofmann suit the defendant had raised substantially the same defenses above referred to, including the defense of lack of patentable invention in view of the "Gotham" and "Nusbaum" prior uses. The case was fully tried before the District Court (John Boyd Avis, J.), and that Court rendered its opinion (Appendix A), sustaining the patent as to the claims in suit, namely Claims 1, 3, 14 and 15 (the same claims subsequently involved in the Hirsch suit at bar) and finding infringement. Upon appeal by the defendant, Alfred Hofmann, Inc., to the United States Circuit Court of Appeals for the Third Circuit, that Court affirmed the decree (Appendix B). The defense of lack of invention, overruled in the Hofmann suit in the Third Circuit but sustained in the instant case in the Second Circuit, was the same defense in both cases,—the evidence with respect to the "Gotham" and "Nusbaum" prior uses being stipulated into the instant case from the record in the Hofmann case (R. I, 14). The Court of Appeals for the Second Circuit refused to follow the decisions in the Third Circuit involving the same patent, the same claims of that patent, and substantially the same record so far as concerns the said particular defense.

As appears from the opinion of the Circuit Court of Appeals in the instant case, that Court having reached the conclusion that the claims in suit are invalid for want of invention, found it unnecessary to pass on the other defenses which had been overruled in the Third Circuit but again presented to the Courts of the Second Circuit in the instant case.

The other defenses presented to the Court of Appeals in the instant case, and not passed on, were:

(a) Invalidity of the patent in suit on the ground of insufficiency of disclosure. (Infra p. 36)

(b) Invalidity of the patent in suit because of alleged inoperativeness of the machine shown and described. (Infra p. 39)

(c) Invalidity of the patent in suit for alleged anticipation by one or more of sundry pleaded prior patents. (Infra p. 41)

(d) Invalidity of the patent in suit for alleged want of commercial utility. (Infra p. 42)

(e) Unenforcibility of the patent in suit because of delay in filing a disclaimer. (Infra p. 44)

(f) Non-infringement. (Infra p. 48)

None of these listed defenses presents an issue involving conflict between the Courts in the two Circuits.

Patent In Suit.

The subject of the patent is an attachment for a well-known machine, referred to in the patent as a flat knitting machine for making hosiery of full-fashioned type, or more briefly, a full-fashioned knitting machine.

The significance of the term "attachment" lies in the fact that the device is applied, or adapted to be applied, to a well-known machine, complete in itself, the device of the patent being an added mechanism, adapted to operate and be operated in conjunction with all of the regular parts of the known machine. The attachment may be applied to machines previously installed and in use or may be furnished as part of the equipment of a new machine.

The full-fashioned knitting machine referred to in the patent, is the conventional "Cotton" machine as developed for the manufacture of full-fashioned stockings. This is to be distinguished from certain other types of knitting machines, such as the circular machine, the independent

needle machine, and machines designed primarily for the making of knitted underwear,—all of which will be referred to later.

The Full-Fashioned Knitting Machine.

The machine is a highly complex piece of mechanism. In the patent drawings, the only parts of the full-fashioned knitting machine which are shown are certain portions of the frame members numbered 1, 2, 3 and 4, the main cam shaft 5 and some of the yarn guide carrier bars 6; and these parts are shown in only a fragmentary and diagrammatic manner.

A general idea of the machine as a whole can be obtained from the large photograph, Plaintiff's Exhibit 7 (offered R. I, 21)—a photograph of a twenty-four section machine. Reference may also be made to sundry photographs reproduced in Volume II of the printed Record.

On the full-fashioned knitting machine the stockings are knit in the form of flat blanks,—the blank, when completed, being folded over and seamed at the free edges to form the stocking. The complete blank is knit on two separate machines—one known as the legger and the other as the footer. The leg blank is knit on the legger, then removed from that machine and finished on the footer. Plaintiff's Exhibit 4 (offered R. I, 18) is a leg blank, and Plaintiff's Exhibit 5 (offered R. I, 18) is the complete blank, including both leg and foot. A typical form of leg blank is shown in the drawing, Plaintiff's Exhibit 18 (R. II, 368),—the so-called heel tabs being shown at the bottom of the blank; and the drawing on page 11 of plaintiff's booklet, Plaintiff's Exhibit 6 (offered R. I, 20) shows the complete blank, including leg and foot portions, and illustrates the manner in which the heel tabs are turned when the leg blank is run onto the footer, preparatory to the knitting of the foot portion.

An explanation of the general construction and oper-

ation of the full-fashioned knitting machine is found at pages 18 et seq. R. I, in connection with various illustrative exhibits, particularly the booklet, Plaintiff's Exhibit 6. On the machine illustrated in the photograph, Plaintiff's Exhibit 7, above-referred to, blanks for twenty-four stocking legs are knit at one time, the machine having twenty-four sections, and the motions on one section being duplicated simultaneously on the other twenty-three. The machine has upwards of 12,000 needles, and the mechanisms required to give the necessary cycle of movements to these needles and to accomplish all of the other numerous movements of the parts of the machine are operated from a single cam shaft—a long shaft running through the entire length of the machine.

The Yarn Guide Carrier Bars.

A characteristic of the Cotton type of machine is that the yarn guides are mounted on reciprocatory carrier bars. These bars run lengthwise of the machine and are the bars which are indicated by the numbers 6 in Figs. 2 and 3 of the drawings of the patent in suit. The guides may also be seen marked H on pages 14, 15, 16, 17 and 18 of the booklet Plaintiff's Exhibit 6. These yarn guides are mounted along the length of each carrier bar, each bar carrying one guide for each section of the machine throughout its length, and the total reciprocating movement of the carrier bars is approximately the width of a single section, so that a yarn guide may be made to traverse the width of the section and lay the yarn in position to be operated upon by the needles of that section. The reciprocation of the carrier bars is accomplished by mechanism operated from the main cam shaft. The extent of movement of the reciprocatory carrier bars is automatically controlled by the end stops, and the position of these end stops can be adjusted automatically in one direction only, so as to change the stroke of the carrier bars. This

operation is required in connection with the fashioning or narrowing of the blank to make the finished stocking approximate the shape of the leg or foot, and this subject is referred to under the general heading of "narrowing motion", commencing at page 32, R. I.

Narrowing.

Narrowing involves not only the adjustment of the end stops gradually to shorten the stroke of the carrier bars with their yarn guides, but more particularly involves the operation of the so-called narrowing points to receive some of the outer loops of the fabric from their needles and to transfer those loops to inner needles. At page 32, R. I, the action of the narrowing points is described and the mechanism for moving the points is described at pages 32 to 36, R. I.

The narrowing head is described at pages 32 to 36, R. I, by reference to the aluminum model, Exhibit 11, and Figs. 27 and 28 on pages 40 and 42 of Exhibit 6. The narrowing heads are located on each end of the machine, and each carries two spindles L and K, as shown in Fig. 28, page 42, Exhibit 6. K is the spindle which controls the movement of the narrowing slides to move the narrowing points (explained R. I, 32). The spindle K is a reversely threaded spindle, some times being turned automatically in one direction only, and at other times being turned a distance corresponding to two needles in one direction, and then turned a distance of one needle in the opposite direction.*

The other operation involved in narrowing, to wit, the adjustment of the end stops to shorten the throw of the

---

* It will, of course, be understood that the work accomplished by the reversely threaded spindle in moving the slides M and N, and thereby bodily moving the point bars, is entirely different from the function performed by the reversely threaded spindle forming part of the attachment of the patent in suit, said spindle in the patent in suit carrying nuts or stops for controlling the recip[illegible]y movement of the carrier bars by cooperation with abutments suitably placed on the carrier bars.

yarn guide carrier bars is explained at pages 34, 35, R. I. The end stops are readily seen in the aluminum model, Plaintiff's Exhibit 11, and see R. II, 365, and p. 40 of Exhibit 6. In the illustration on page 42, Exhibit 6, the series of stops, one for each carrier bar, are marked S. They are mounted on the nut Q, which is in turn carried by the threaded spindle L, and this spindle can be turned inwardly by a pawl and ratchet mechanism shown at the left-hand end of the illustration, adapted to be operated through connecting mechanism from the main cam shaft. The rotation of the spindle L will cause the nut Q, carrying the end stops, to move toward the right and thereby position the stops so as to shorten the stroke of the carrier bars. A similar arrangement is at the opposite end of the machine carrying and controlling the end stops at that end. In the illustration, the series of carrier bars, seven in number, are shown broken away to permit the spindle L to be seen. It is to be noted that while the slides M and N, which move the narrowing points, are mounted on a reversely threaded spindle, the spindle which carries and controls the movement of the end stops S is an ordinary spindle threaded in one direction only. The spindle which moves the end stops at the opposite end of the machine is just like spindle L, but threaded in the opposite direction.

The spindles on the narrowing head for moving the narrowing points and the end stops *are, and must be, worked together*, (Rec. I, 35).

When the narrowing is completed, the end stops and the slides M and N on spindle K are returned to their initial positions by the turning of the spindles by hand in a direction opposite to that in which they are rotated in the narrowing operation. In other words, the "racking-out" is a hand operation (R. I, 35).

We have made particular reference to the narrowing operation and to the control of the end stops incidental to that operation for the reason that the attachment of the patent in suit, furnishing auxiliary stops for giving addi-

tional control to the travel of certain of the carrier bars, finds its utility in the cooperation of the auxiliary stops with the regular end stops on the machine.

The Schletter Attachment.

At page 1 of the specification, lines 24 to 37, of the patent in suit, is the following statement:

> "It is an object of my invention to provide an attachment for full-fashioned knitting machines whereby yarn-guides can be accurately controlled to lay a yarn over a distance less than the full length of a course being knitted, as for reinforcing or for so-called split-seam work wherein sections of fabric are connected by suture seams. For this purpose I preferably employ opposed stops with conjoint controlling means arranged to move them toward or from each incrementally, but any equivalent means or devices may be employed which will effect the purpose of the invention."

Whereas, in the ordinary operation of the knitting machine the yarn guides are controlled only by the end stops and lay the yarn over the full width of the fabric being knitted, that is, from selvage to selvage, the purpose of the attachment is to furnish accurate control for yarn guides *laying a yarn over a distance less than the full length of a course being knitted*; and this is done for "reinforcing" or "split-seam" work.

The terms "reinforcing" and "splicing" as employed in the patent, refer to the knitting in of an additional thread over a particular area of the main body of the fabric for ornamental purposes (Rec. I, 39).

"Split-seam" or "insert" work refers to the insertion in the body of the stocking of an area formed by a separate thread or fabric as distinguished from a "reinforced" area (Rec. I, 36, 37).

In addition to the patent in suit, reference may be made

to the perspective drawing, Plaintiff's Exhibit 15 (Rec. II, 366) and to the model, Plaintiff's Exhibit 11.

Detailed explanation of the mechanism and its operation will be found at pages 40 and 45, Volume I, of the Record. The essential parts are the reversely threaded spindle 11; the nuts or stops 9 mounted on the spindle and adapted to be moved toward and from each other by the rotation of the spindle in opposite directions; the ratchets 21 and 22 at the end of the spindle, adapted to turn the spindle in opposite directions, together with mechanical connections whereby these ratchets may be turned by power from the main cam shaft; the mechanism for determining which of the ratchets is to be operated so as to determine the direction of rotation of the spindle; and the pattern chains, one of which determines the time of operation of the spindle, and the other, the direction of rotation.

The means for operating the ratchets 21 and 22 is explained at R. I, 41. The pawl and ratchet mechanism at the end of the spindle 11 is out of operation so long as the slidable rod or shaft 42, shown at the bottom of Figure 1 of the patent, is in the position there shown, but when the shaft is moved slightly to the left by means of the spring 43, shown at the left-hand end of Fig. 1, the pawling mechanism for the ratchets 21 and 22 is set into operation.

The operation of the shaft 42 is controlled by the pattern chain 50, the buttons 55 on that chain having the function of releasing an arm or lever which normally holds the shaft 42 in its position, as shown in Fig. 1, and permitting the spring 43 to act to move that shaft 42 slightly to the left. This is explained at pages 41, 42, Volume 1, of the Record.

The selective mechanism is explained at pages 42, 43, Volume 1, Record. The pattern chain 70, shown at the right in Fig. 1, with its lugs 2, when they come to appropriate position in relation to lever 73, causes the tilting of the lever to move the cords 74 and 75 in such a manner as to throw either pawl 25 or pawl 26 into engagement with its

ratchet 21 or 22 and the direction of rotation of the spindle 11 will thereby be determined.

What the Attachment Does.

As stated at the commencement of the specification, the invention has more particular relation to an attachment for furnishing designs, or clocks, upon full-fashioned stockings. These designs may be inserts (split-seam work) or they may be formed by "reinforcing" or "splicing".

A specific example of the split-seam or insert work is illustrated in Fig. 10 of the patent, and the manner in which the auxiliary stops of the attachment are utilized in the knitting of this particular article is described at lines 21 to 45 of page 4 of the specifications. The other type of work, to wit, reinforcing or splicing, is illustrated in the patent (line 32, page 2) by reference to another patent to Schletter, No. 1,531,349, Plaintiff's Exhibit 39 (R. II, 393), illustrating a clock formed by the use of additional or reinforcing yarn.

The stockings, Plaintiff's Exhibits 21 and 22 (offered R. I, 49) illustrate the clocks formed by splicing or reinforcing, and the stocking, Plaintiff's Exhibit 17 (offered R. I, 46), is the split-seam or insert work of Fig. 10 of the patent.

The specific manner of use of the auxiliary stops of the attachment in connection with the end stops on the machine is explained in the record in connection with illustrative stockings and with drawings illustrating the control of the carrier bars in doing each type of work. The drawing, Plaintiff's Exhibit 16 (R. I, 367), illustrates the stockings shown in Fig. 10 of the patent in suit, and the manner in which the attachment is used in making that stocking is explained at R. I, 45, 46. The drawing, Plaintiff's Exhibit 18 (R. I, 368) and the stocking blank, Plaintiff's Exhibit 19 (offered R. I. 47), illustrate another form of insert work similar to that illustrated in Plaintiff's Exhibit 16. See pages 47, 48 R. I. In doing this work, certain of the carrier bars travel the full width of the fabric and are controlled

only by the end stops. Where the clock is inserted, the carrier bar laying the thread for the insert or clock is controlled entirely by the auxiliary stops, an abutment on the bar contacting at each end of the stroke with the inner face of one of the auxiliary stops. At the same time, other carrier bars for laying the thread on either side of the clock are controlled by the end stops at one end of their throw and by the auxiliary stops at the other end, an abutment on the carrier bar striking against the end stop at one end of its path and on the outer side of one of the auxiliary stops at the inner end of its path. During the knitting of the clock or insert portion, the position of the stops is adjusted automatically by the turning of the spindle 11 so as to form the junction along zig zag lines inclined to the wales and courses of the web, as illustrated, for example, in Fig. 10 of the patent.

The formation of the reinforced or spliced clocks, such as are referred to in Schletter's other patent, Exhibit 39 (R. II, 545), is explained at pages 72-74 R. I by the drawings marked Plaintiff's Exhibit 20 (R. II, 520). In this work, the thread forming the main body of the fabric is laid by yarn guides on carrier bars having the full stroke and controlled by the end stops. The thread for the ornamental reinforcement or clock is laid by guides on other carrier bars traveling less than the full width of the fabric and controlled by the auxiliary stops, these stops cooperating with abutments suitably placed on the carrier bars. Other examples of clock-work are shown in Plaintiff's Exhibit 23 (offered R. I, 75) and Plaintiff's Exhibit 24, (R. II, 521).

The insert work and the ornamental reinforced clock-work, thus described, are the two types of work specifically referred to in the patent.

The attachment can also be used for reinforcing work at the selvage. A particularly important type of such work is that shown in the "cradle foot" stocking, Plaintiff's Exhibit 29 (offered R. I, 51). This work is described at pages

51 to 52, R. I, in connection with the drawing, Plaintiff's Exhibit 28 (R. II, 372).

The foregoing explanation of the different general types of work which can be produced by the use of the attachment is of importance, as a large part of the value of the device resides in its availability for knitting stockings embodying any one of a large number of kinds of ornamental work which may from time to time meet the shifting demands of fashion.

COMMERCIAL HISTORY OF THE PATENTED ATTACHMENT.

Plaintiff purchased the patent in suit for $20,000. after a thorough investigation (R. I, 118) and placed the device on the market in August, 1927 (R. I, 77). Up to January 1, 1935, 6790 of the attachments had been sold by the plaintiff, of which 2768 were sold with knitting machines and 4052 were sold separately for attachment to machines already in service. (R. II, 385-387; R. I, 76-78.) The minimum sales price of the attachment was $350.00 (R. I, 119) and the business in the attachments, therefore, aggregated close to Two and One-half Million Dollars. These sales took place over a period which included several years of severe business depression.

All of the plaintiff's machines are provided with the attachment, and practically all of the older machines in operation in the industry at the time the attachment was brought out were later supplied with it (R. I, 118). Witnesses on both sides testified that the attachment now forms an essential feature of the full-fashioned knitting machine (R. I, 60, 127, 234). Hirsch, President and General Manager of the defendant, testified (R. I, 228):

> "As to the Carl Lieberknecht machines, at present we equip all of them with that attachment because the style demands that kind of construction of the stocking. For the present it would be hard to sell a full-fashioned machine without an attachment of that kind."

Plaintiff's competitors in the sale of full-fashioned knitting machines in this country are the American representatives of four German manufacturers. One of these has recognized the patent and taken a license, subject to the payment of substantial royalty—the Grosser license—Plaintiff's Exhibit 37 (R. I, 119). Another has applied for license (R. I, 119) and the only two others, the Hirsch Company, defendant in this suit, and the Hofmann Company, defendant in the prior suit, have declined to take licenses but have insisted upon using the attachments, and have joined in the effort to destroy the patent, (supra, p. 3).

The Claims in Suit.

As previously stated, the claims in suit are Claims 1, 3, 14 and 15. These claims are all directed to the same subject-matter. As the Court of Appeals in its opinion referred particularly to Claims 14 and 15 as the most detailed, we select one of these claims, Claim 15, for analysis as a basis for the discussion.

Claim 15—In a straight knitting machine,

(This refers to the machine shown and described, to wit, the conventional Cotton machine for making full-fashioned hosiery, termed in the patent, as well as in the art, a "full-fashioned knitting machine". This type of machine is characterized by its recipocating carrier bars controlled by end stops at either end of the machine, adjusted automatically when the blank is being "narrowed" or "fashioned".)

—a set of reciprocating yarn guide carrier bars, including bars having a stroke less than the width of the fabric being knitted,

(Some of the carrier bars are full-travel bars, controlled by the regular end stops, and others are short-travel bars, controlled, at least in part, by the auxiliary stops of the attachment.)

—a pair of stops for said guides,

(The auxiliary stops 9 of the attachment.)

—a reversely threaded spindle extending lengthwise of the machine, the respective stops being connected to the reversely threaded portion of the spindle for moving the stops simultaneously toward and from each other,

(This is the spindle 11 of the attachment, having the function stated, and suitable means for turning the spindle, as the ratchets 21 and 22, operated through connections from the main cam shaft—all as shown and described in the patent—is necessarily implied.)

—pattern controlled means for determining the time for such movement,

(The shaft rod 42 with its associated mechanism—seen best in Fig. 1 of the drawings, all under control of pattern chain 50 for putting the spindle actuating mechanism into and out of operation.)

—and correlated pattern controlled means for independently determining the direction of such movement.

(The lever 73 and its associated mechanisms clearly shown in Fig. 8 of the patent, all under control of the pattern chain 70, for selecting between ratchets 21 and 22 for operation.)

What this claim covers, therefore, is in the full-fashioned hosiery machine with its reciprocating carrier bars, the combination of full-travel bars controlled by the regular end stops, short-travel bars cooperating with the full-travel bars in making designs on hosiery, auxiliary stops for controlling the short-travel bars, the reversely threaded spindle for moving the auxiliary stops toward and from each other, and automatic means for moving the auxiliary stops

in either direction, including pattern controlled means for timing the operation of the spindle and pattern controlled means for selecting the direction of rotation of the spindle.

The patentee's contribution to the knitting machine art may be thus stated:—While he was not the first to provide mechanism for the making of ornamental inserts or split-seam work on hosiery, or mechanism for the production of ornamental reinforced designs, or mechanism for reinforcement at the selvages, he was the first to produce a single, compact, efficient attachment for the full-fashioned machine, readily added to an old machine or made a part of a new one, which permitted the machine to make, as and when the operator desired, any of said several types of ornamental or reinforcement work in all of the varied forms which these kinds of work may take.

The Court of Appeals in the decision here for review held the claims unpatentable for lack of patentable invention by coupling together two prior use devices known in the case as "Gotham" and "Nusbaum".

The Gotham Device.

This is shown in the drawing, R. II, 839; the photographs, R. II, 821-825, and the physical exhibit, DX R. I, offered R. I, 204. It was an attachment applied to the full-fashioned knitting machine for making the reinforced heels known as "Pointex" heels. For illustration, see R. II, 404. The blank for the stocking is shown in Fig. 8 of the Landenberger Patent (R. II, 522). The fabric of the blank was provided with reinforcement at the heel tabs, such reinforcement extending from the selvage on each side and terminating inwardly on a diagonal line.

While in this attachment there was a reversely-threaded spindle, and each threaded portion of the spindle carried a nut to serve as a stop for one of the carrier bars, these stops were neither adapted nor arranged to serve as auxiliary stops for the control of carriers for making ornamental designs away from the selvage, such as the "clocks" or

split-seam inserts of the patent in suit. Referring to the drawing, R. II, 839, the stop 8 at the left of the picture controlled the inward movement (to the right) of one carrier bar, and the stop 8 at the right of the picture controlled the inward movement (to the left) of another carrier bar, but there was no common control by these nuts of one or more carrier bars provided with abutments shuttling back and forth between the stops. Furthermore, there was no mechanism for moving the stops automatically in both directions, and of course no selective mechanism for determining the direction of rotation of the spindle. The spindle was rotated in one direction only for adjusting the position of the stops while doing their work, and after the work was finished, the threaded spindle was turned in the reverse direction by hand (an operation known as racking-out) to re-set the stops in preparation for a similar operation on the next blank.

This Gotham attachment was used, and could only be used, for the single purpose of making Pointex heels, that is to say, it was adapted and used solely for making a single form of straight-line selvage reinforcement. Attachments of this character were furnished to the Gotham Mill at Dover, N. J., from Germany at least as early as 1912, and similar attachments were furnished to Julius Kayser, of New York, at least as early as 1919. The device has been well-known for 25 years, and the only thing it was ever used for was to make the Pointex heel (R. I, 275, 276). The devices are no longer in use.

The Nusbaum Machine.

This machine is shown in the photographs, Defendant's Exhibit Y-1 (R. II, 830) and illustrated in the drawing, Defendant's Exhibit B-2 (R. II, 840).

It is a flat knitting machine for making knitted underwear and such articles as bathing suits. As shown in the exhibits referred to, this type of machine has at each end a single spindle, threaded in one direction only, employed in

moving simultaneously the fashioning points and the end stops for controlling the movement of the reciprocating carrier bars in fashioning. These spindles can be operated in either direction, so that the garment can be shaped either by widening or narrowing the blank. Desiring to make bathing suits with a limited class of ornamental designs, the Nusbaum people utilized the regular fashioning screws or spindles at opposite ends of the machine and the regular end stops to control the travel of a bar laying in the thread for the designs, and they added fixed stops at each end of the machine to take the place of the regular end stops and control the travel of the carrier bar laying the thread for the body of the garment. They thus sacrificed the fashioning function of the machine and could only make garments with straight edges.

Opinion of the Court of Appeals (R. II, p. 769.)

The Court held that while the Gotham device did not anticipate the device of the patent in suit, it left but a slim margin for invention; that the Nusbaum device was "substantially the same thing as the defendant's attachment", and that there was no invention in the bare conception of combining Gotham and Nusbaum. The Court conceded that as between Nusbaum and the combination of the patent in suit "it is indeed quite possible that there were in fact obstacles enough to call for substantial inventive capacity"; but said that "if so, Schletter did not show how they were to be overcome".

Summary of Argument.

I. *The Gotham device was not an anticipation of the patent in suit.*

It did not meet the claims in terms or in substance.

II. *As compared with the Gotham device, the attachment of the patent in suit represents a real invention.*

(a) It involved a new combination with different functioning of the parts and a new result.

(b) Substantial inventive capacity was required to conceive the mechanism involved.

(c) The Court of Appeals was in error in its conclusion that the invention of the patent in suit must rest upon the bare conception.

III. *The Nusbaum machine was not an anticipation of the claims in suit and it did not approach the Schletter invention.*

The Court of Appeals misunderstood the Nusbaum device.

IV. *The Court of Appeals was in error in combining, or attempting to combine, "Gotham" and "Nusbaum".*

The two devices were unrelated; they were mutually antagonistic and could not be combined; the aggregate work of the two devices fell far short of the work for which the attachment of the patent in suit is adapted.

V. *The attachment of the patent in suit has had unusual commercial success and filled a long-felt want.*

The Court of Appeals was in error in its treatment of this evidence of invention.

VI. *Discussion of sundry other defenses not considered by the Court of Appeals.*

ARGUMENT.

I. *The Gotham device was not an anticipation of the patent in suit.*

That Gotham was not an anticipation, was recognized by the Court of Appeals (R. II, 771). It had a reversely threaded spindle and two auxiliary stops, but these stops did not act as a "pair" in controlling the carrier bars (see patent specification, page 2, lines 124-128). There was no mechanism for moving the stops automatically in both directions, no timing means, such as is required by the claims, and no selective mechanism for determining the direction of rotation of the spindle. Consequently, it was wholly incapable of doing the type of work accomplished by the device of the patent in suit.

As held by numerous decisions of this Court, it is not sufficient to constitute an anticipation that the device relied upon might, by modification, be made to accomplish the function performed by the patent in question, if it were not designed by its maker, nor adapted, nor actually used, for the performance of such functions. Topliff vs. Topliff, 145 U. S. 156.

II. *As compared with the Gotham device, the attachment of the patent in suit represents a real invention.*

(a) It involved a new combination, with different functioning of the parts and new result.

Of Gotham, the Court of Appeals said:

"We shall call this machine the 'Gotham'; it would not have been available for Schletter's purpose as it stood, and it did not therefore literally anticipate his invention. But it certainly pressed very closely upon it, and left at best a slim margin for invention; nothing indeed but the train automatically to reverse the rotation of the screw shaft by the pattern belt."

But in dealing with a new invention, it is clear, we submit, that the question of patentable invention turns not merely upon the extent and nature of the mechanical changes, but rather upon the question of novelty of function and result. The addition of mechanism for accomplishing the purpose of the new combination must be preceded by the conception of the purpose in view and the recognition of the availability of the old device with the addition of the necessary mechanism for the accomplishment of the new purpose and added functions. Nat. Cash Register Co. vs. Boston Cash Indicator Co., 156 U. S., 502 (514); Hobbs vs. Beach, 180 U. S., 383 (392); White & Co. vs. Converse & Son Co., 20 Fed. (2nd), 311.

The selvage reinforcement work accomplished by this Gotham device and the operation and functioning of the auxiliary stops in that device have been described above, p. 17.

Comparison with the drawings, Plaintiff's Exhibits 16, 18, 20, 24, 25 and 28 (R. I, 367-372), showing how the auxiliary stops of the attachment of the patent in suit are employed in doing the various kinds of design work, will show very clearly the difference in function and mode of operation. For example, in Exhibit 16 the yarn carrier which lays the thread for the inserted design is on the uppermost carrier bar, and the movement of this bar is controlled at either end by the two auxiliary stops, these stops thus serving as "opposed" stops, the abutment on the carrier bar contacting with the inner faces of the two stops. At the same time these auxiliary stops are cooperating with the end stops to control the carrier bars for the carriers which lay the body yarn at either side of the inserted work. As the design is in the narrowed portion of the blank, the end stops, while cooperating with the auxiliary stops in the manner stated, are themselves being moved inwardly step by step in the narrowing operation. Also it will be noted that while the auxiliary stops are performing their double functions, as stated, they are caused to move automatically in both directions; whereas, in the Gotham attach-

ment, they moved in performing their work in one direction only.

Thus it will be seen that the Pointex heel attachment, as employed at Gotham and elsewhere, was a single purpose device. It was adapted and used solely for making a single form of selvage reinforcement at a single part of the stocking, the heel. The auxiliary stops were not adapted to be used as "opposed stops" for the making of ornamental work (splicing or shadow clock designs or inserts, or split-seam designs) away from the selvage (R. II, 395, 396, et seq.). Such work required the operation of the reversely threaded spindle automatically in both directions, with the necessary selective and timing mechanism with suitable pattern devices. It meant giving the auxiliary stops a function which they did not possess in the pointed heel attachment, to wit, the control of carrier bars between the inner faces of the stops and the placing on the carrier bars thus to be controlled of the necessary abutment or abutments required by that different use of the said stops. Instead of a combination of end stops and auxiliary stops adapted to the sole purpose of making a one-way selvage reinforcement of a set form, there was a new combination of end stops, auxiliary stops and the necessary mechanism for automatic operation of the auxiliary stops in both directions, the new combination being adapted not only for selvage reinforcement of any desired form, but more particularly for split-seam work, fancy insert work away from the selvage, and spliced designs (such as shadow clock work), providing for the full-fashioned hosiery machine, for the first time in the history of the art, a single, efficient attachment for accomplishing a wide variety of work never before accomplished by any single device.

We submit that the District Court was right in its conclusion on this point (R. II, 750) when it said:

> "By adding the automatic reverse, with the necessary operating, selecting and timing mechanisms, Schletter produced a new combination, giving to the

auxiliary stops functions which they did not possess in the old pointed heel device, producing an entirely new result; turning a device adapted for a single purpose into a device of general utility, adapted for a whole field of new uses, which those familiar with the old attachment had never dreamed of. Such steps as this show invention. Diamond Rubber Co. vs. Consolidated Co., 220 U. S., 428; Temco vs. Apco, 275 U. S., 319; Bragg-Kliesrath Corp. vs. Farrell, 36 Fed. (2nd) 845; Thropp & Sons Co. v. DeLaski, 226 Fed., 941, 947."

(b) Even if the question of invention turned solely upon a consideration of the mechanical changes involved (which, we submit, under the decisions of this Court, is not the law) the record here confirms the presence of invention.

Schletter had to do much more than supply an additional pawl and ratchet and the necessary train for operating them from the main cam shaft. He had also to supply a suitable mechanism to determine which of the pawls on the reversely threaded spindle should be actuated at any given time and thereby determine the direction of rotation.

Not only was it necessary that these two mechanisms be properly coordinated and timed with respect to each other as by means of shaft 42, but they must also be prevented from interfering with other operations of the knitting machine. In the Gotham attachment, the auxiliary stops were operated only in knitting that portion of the heel where there was no operation of the regular narrowing mechanism. The primary uses of the attachment of the patent in suit either on the legger or on the footer require the employment of the auxiliary stops in knitting those parts of the stocking where, at the same time, narrowing is taking place. The movement of the narrowing points and the movement of the threaded spindle for changing the position of the auxiliary stops can not be made at the same moment, and hence mechanism is provided for preventing this.

This mechanism is that described at lines 46 to 62 of page 4 of the specification. Of importance also is the fact that in the Gotham attachment, the auxiliary stops did not act as "opposed" stops for controlling the travel of a single carrier bar, and therefore the device of the patent in suit required a different location of the abutments on the carrier bars from that involved in the Gotham device.

The full-fashioned hosiery machine to which the attachment was to be applied is a complex organism, involving a large number of complicated mechanical operations; the new attachment had to be operated automatically through the medium of a device to be added to the main cam shaft which was already filled with cams and other devices for operating the regular motions of the machines; and the new device had to be synchronized with other operations, as the auxiliary stops of the attachment must be worked in conjunction with other moving parts, such as the regular end stops, the stitch regulating mechanism and the rocking motion, and must be prevented from interfering with other movements.

That the problems were real is shown by the evidence (R. I, 310-1; 272-3). The location of the spindle in a certain position relative to the carrier rods necessitated the building of the controlling mechanism into an inside section already provided with all the parts necessary to operate the knitting machine, and this prevented the employment in Schletter's attachment of control mechanism for the spindle, which otherwise might have been available.

The conclusion that the conversion of Gotham into the attachment of the patent in suit was, mechanically considered, a mere matter for the expected skill of the mechanic finds no basis in the evidence in the case.

In the case of a complicated piece of mechanism like the full-fashioned knitting machine, the observation of this Court in Diamond Rubber Co. v. Consolidated Rubber Co., 220 U. S., 428 (435), is particularly applicable:

"Many things, and the Patent Law abounds in il-

> lustrations, seem obvious after they have been done, and, 'in the light of the accomplished result' it is often a matter of wonder how they so long 'eluded the search of the discoverer and set at defiance the speculations of inventive genius', * * * Knowledge after the event is always easy, and problems once solved p[illegible]sent no difficulties, indeed, may be represented as never having had any, * * *''

(c) The inherent difficulties of the problem, requiring substantial inventive capacity to overcome, were recognized by the Court of Appeals. Speaking of the technical difficulties of executing Schletter's conception, the Court said (R. II, 772):

> "It is indeed quite possible that there were in fact obstacles enough to call for substantial inventive capacity; but if so, Schletter did not show how they were to be noted in a moment, he said nothing at all about how his attachment was to be put on."

This led to the conclusion that "the patent can only stand upon the bare conception." (R. II, 773.)

In this, the Court was surely in error. The drawings of the patent clearly show the attachment *in place* upon the full-fashioned knitting machine. As clearly shown in Fig. 1, the reversely threaded spindle is mounted on an inner section of the machine, just inside the end section. All this is specifically explained in the specification, and at page 3, line 19, it is expressly pointed out that the brackets 12 carrying the reversely threaded spindle are to be located "intermediate the length of the machine", as clearly shown. A comparison of Fig. 1 of the drawing with the photograph, Plaintiff's Exhibit 54 (R. II, p. 407) will show the identity of the location of the stops 9-9 as shown in the photograph with that shown in Fig. 1 of the patent drawings. The screws on the spindles, shown at the righthand end of the photograph, are the regular fashioning screws in the full-

fashioned machine which have been omitted in the patent drawings for the sake of simplicity. The patentee devised and disclosed in his patent a complete attachment, including the operating and selective mechanism, in a form adapted for application by the mechanic to the full-fashioned machine at the location and in the manner shown and described. That was all that he was required to do. The plaintiff, in his commercial form of attachment, and the defendant have simply substituted mechanical equivalents for the specific form of mechanism disclosed.

We submit that the Court was clearly in error in its conclusion that the invention must rest "upon the bare conception", and in thus finding lack of invention (contrary to the view of the three other courts who have passed upon the question) notwithstanding its own recognition of the likelihood that "substantial inventive capacity" was required.

The Court was equally in error, we submit, in brushing aside, as a mere matter of mechanics, the provision of mechanism for preventing the movement of the reversely-threaded spindle during the movement of the narrowing points in fashioning. The Court said of this problem that "the solution was one which could scarcely have foiled a competent mechanic who might learn of the need by experience". There is not a syllable of evidence in the record to support this conclusion, and in this respect, we submit that the Court placed upon the plaintiff a burden, which is in law upon the defendant. It is true that the mechanism devised and disclosed by the patentee for accomplishing this purpose is not recited in the claims here in suit; but nevertheless, we submit that the existence of this problem and the necessity for its solution must be taken into account as one of the material facts bearing upon the question whether the combination of the claims in suit involved creative imagination or merely the routine work of a skilled mechanic.

III. *The Nusbaum machine was not an anticipation of the claims in suit and it did not approach the Schletter invention.*

This machine, as altered by the Nusbaum people obviously lacks the vary essence of the Schletter invention, to wit, the furnishing of an attachment to be added to or embodied in the regular full-fashioned machine, which attachment provides auxiliary stops, automatically controlled, additional to and cooperating with the regular end stops on the machine, so that while the machine is functioning to make full-fashioned hosiery, involving, of course, the use of the regular fashioning screws controlling the end stops, short travel bars can also be automatically controlled to lay in the yarn necessary in making the desired ornamental designs. To put the matter succinctly, Nusbaum was able to make a single type of ornamental design, but only by sacrificing the fashioning of his garment; whereas, Schletter made an attachment for making fancy designs of many types (as well as numerous other things) without interfering in any way with the devices essential to the machine for making full-fashioned hosiery.

The Nusbaum machine is not an anticipation of the claims of the patent in suit, not only by reason of its lack of the reversely threaded spindle, but because, as altered, the machine was no longer a full-fashioned machine, and it did not have auxiliary stops, automatically controlled, in combination, and acting in cooperation, with the regular automatically controlled end stops of the full-fashioned machine,—all as required by each of the claims of the patent in suit (supra pp. 15, 16).

The Court of Appeals in referring to the Nusbaum device referred to it as an attachment, and said that:—"Nusbaum made over an old 'full-fashioning' machine, using the existing nuts as variable abutments *for stops on* the bars which carried the secondary thread carriers, and supplying a new thread carrier and bar for the main thread." The result, it is said, was substantially the same thing as the defendant's attachment.

It is evident from this that the Court misunderstood the Nusbaum device. The spindles and nuts employed to control the reciprocation of the "secondary" thread carriers were the spindles at opposite ends of the machine with the regular end stops thereon, and they were used without change of location as end stops for the "secondary" thread carriers. They were not, as understood by the Court, used "as variable abutments *for stops on* the bars which carried the secondary thread carriers" in seeming analogy to the variable stops of the attachment of the patent in suit—*they were end stops separated by the entire length of the knitting machine, and they functioned as end stops and nothing more.**

The difference is material. Acting only as end stops—that is to say, stops against which the ends of the controlled carrier bars abutted—these stops were incapable of performing the functions with respect to which the attachment of the patent in suit has found it real utility. The work shown in Fig. 10 of the patent in suit could not be done because it is insert work. Not even reinforced clock-work on hosiery could be made for any practical purpose, as this normally required two clocks on the blank—one for each side of the stocking. Thus the clock-work shown in Schletter Patent No. 1,531,349 (R. II, 393) and specifically referred to in the patent in suit (Spec. p. 2, I 32) as illustrative of the work in contemplation, could not be made on the Nusbaum device. We are not here speaking of the lack of fashioning, but of the fact that *end-stop control* of the secondary carriers—the only thing attempted or taught by Nusbaum—would be useful only for a lone reinforced design between the selvages. Thus not one of the types of design shown on

* The Court may have been confused by the drawing, Defendant's Exhibit B-2 (R. II, 840). In that drawing the spindles A and B appear to be close to each other in seeming analogy to the threaded portions of the reversely threaded spindle in the patent in suit. It will be noted, however, that the drawing shows breaks in the longitudinal frame member of the machine and in the carrier bars. If the drawing were complete, it would be apparent that the threaded spindles A and B are separated by the entire length of the knitting machine.

pages 367 to 372, R. II, could be made by Nusbaum's end-stop control of the auxiliary carrier bars, quite apart from the fact that fashioning at the margins is also required.

In referring to the Nusbaum machine, the Court of Appeals referred to it as "a knitting machine for making sweaters which was not 'full-fashioning' because the web for a sweater is not narrowed from top to bottom". Before the machine was altered by Nusbaum, it was a "full-fashioning" machine, and it was used for making fashioned garments. The effect of utilizing the Nusbaum fashioning screws for design purposes was to make it impossible to fashion garments and at the same time furnish them with designs, with the result that in order to get his designs, Nusbaum had to make an inferior garment, which could only be sold at reduced prices. (R. II, 810.) This furnishes a factual answer to a contention made by the defendant to the effect that in order to make designs in a fashioned garment, it was obvious to the knitter that all he had to do was to duplicate the fashioning mechanism for the purpose of making the designs. This certainly was not something which was obvious to Nusbaum.

IV. *The Court of Appeals was in error in combining, or attempting to combine, "Gotham" and "Nusbaum" to defeat the claims of the patent in suit.*

The work performed by the Gotham attachment and that done on the altered Nusbaum machine had no real relation. The Gotham attachment was used for reinforcing the heels of stockings—remote, indeed, from making fancy colored designs on bathing suits.

The means for controlling the carriers on the two machines for laying in the extra yarn were quite distinct. In Nusbaum the spindles and nuts employed to control the reciprocation of the carrier laying in the extra yarn were the spindles at opposite ends of the machine with the regular end stops thereon, and they were used without change of location as end stops and nothing more;

that is to say, stops against which the ends of the controlled carrier bar abutted. There were not, as in the attachment of the patent in suit, additional stops brought together and mounted on a reversely threaded spindle, located intermediate the ends of the machine and adapted to control auxiliary bars provided with suitable abutments working back and forth between the stops.

As Nusbaum employed his fashioning screws for controlling his design yarn carrier bar, his whole scheme was foreign to the device of the patent in suit, which provides an attachment for furnishing designs to hosiery without interfering with the regular operations of the full-fashioned hosiery machine.

As to the proposed combination of Gotham and Nusbaum, the situation is even worse. In Gotham, the stops or nuts on the reversely threaded spindle were neither used nor adapted to control the same carrier bar, as required for Schletter's purposes. The stops or nuts were specifically arranged to act upon different carriers, and nothing beyond this was in contemplation. The Court's evident misunderstanding of the Nusbaum device led to the belief that Nusbaum supplied the idea missing in Gotham. But clearly, this is not so. Nusbaum's adjustable stops were merely the end stops and carried no suggestion that auxiliary stops, such as involved in Gotham, could, by the making of such changes in the stops themselves as would adapt them to the new purpose, and by the proper location of abutments on the carrier bars and the introduction at the proper place in the machine of the additional pawling mechanism and selecting mechanism, be converted into the universal attachment covered by the Schletter patent in suit.

The devices could not be combined, as Nusbaum's end-stop control inhibited the use of any similar scheme for Schletter's purpose. And, as we have pointed out above, Gotham and Nusbaum together could do practically none of the types of work for which the patented attachment has proved of value in the industry.

Nusbaum gave no help in the solution of the mechanical problem involved in devising timing and selective mechanism suitable for the purposes of the patent in suit. The Nusbaum controlling mechanism (see Defendant's Exhibit Y-1, R. II, 830) involved the use of two independently operated pawling devices,—there being two pawls, working independently and in different directions. While this type of controlling mechanism could be used by Nusbaum for the operation of his spindles at the ends of the machine, such a control could not be employed by Schletter for his reversely threaded spindle, as the latter had to be located at an inside section, at a part of the machine where there was no room for the passage of such connections as were employed by Nusbaum (R. I, 272). Neither the plaintiff patentee, nor the defendant, has attempted to employ the independent pawling means of Nusbaum.

V. *The commercial history of the attachment of the patent in suit negatives the plea of lack of invention.*

Plaintiff put the attachment on the market in 1927 (R. I, 77). The pointed-heel attachment had been in the art at least 15 years and was a thoroughly well-known device for its particular use (R. II, 786). Plaintiff itself was familiar with the old attachment at the time it purchased Schletter's device for the substantial sum of $20,000 (R. I, p. 275). As above stated (p. 14), the attachment achieved an important and striking success, and promptly became an indispensable feature of the full-fashioned knitting machine. That there had been a need for such a device, is sufficiently shown by its immediate adoption. But in addition to this, the Record shows affirmatively that such need had existed for years, notwithstanding efforts in the industry to fill it.

The Gotham attachment was in use as early as 1912, and, as the record shows, was a well-known attachment for

its particular purpose. If the modification of this attachment to turn it into the universal device of the Schletter Patent was an obvious matter, there is no reason why the industry should have awaited such a device for the fifteen-year period intervening between the introduction of the Gotham attachment and the placing of the Schletter device upon the market in 1927. As shown by the Record, numerous applications were filed in the intervening period showing that the industry was seeking to find a suitable attachment doing design work of the character of that accomplished by the Schletter attachment. See the Gee device, R. II, 502, application for which was filed March 23, 1911; the Cecka devices, R. II, 469, 474a, 412, applications filed respectively July 22, 1914; January 14, 1915, and October 16, 1915; the Muller device, R. II, 542, and the Oesterreich device, R. II, 548, applications filed in 1923; the Lack device in the Hofmann Record, application filed in February, 1924; the Werfelman device, also in the Hofmann Record, application filed in January, 1925.

The Cecka patents mentioned are of particular interest. These patents, Nos. 1,180,568 and 1,217,411, (Rec., pp. 619, 624) were taken out by Schubert and Salzer on applications filed as long ago as 1914. Schubert and Salzer is a leading manufacturer of knitting machinery in Germany and is the principal of Hofmann, the defendant in the Hofmann suit. One of these patents, No. 1,180,568, was directed specifically to an attachment for doing the very type of work for which the Schletter attachment was primarily designed, to wit, the making of ornamental designs remote from the selvages, such as the shadow clocks. The other patent, No. 1,217,411, was specifically directed to the making of reinforcements at the selvage in which the inner margins of the reinforced portions would lie along lines at an angle to the wales and courses of the fabric diagonally in both directions. This work is another one of the important types of work for which the Schletter device is adapted.

The patents show not only that the principals of the defendant in the Hofmann suit (aiding in the defense of this suit) were attempting to supply the full-fashioned hosiery machine with attachments for doing Schletter's work, but they answer in the most direct manner defendant's claim that the Schletter device was an obvious non-inventive development of the old pointed heel attachment. That old attachment originated in Germany, and as has been pointed out, was a thoroughly well-known device for its purpose, yet we find Schubert and Salzer, instead of making the development which the defendant now says was obvious, producing crude and inferior devices, each of which could do only a part of the work which can be accomplished so satisfactorily by the Schletter device, and both of which together fall short of accomplishing all of Schletter's work. We also find that after Schletter successfully solved the problem on which the German manufacturers were working, and the latter were then forced by the mills to furnish attachments for doing the ornamental work successfully, the devices furnished are not the Cecka devices which represent the best that Schubert and Salzer could do, but the Schletter device which actually solved the problem.

Referring to the marked commercial success of the patented attachment, the Court of Appeals said (R. II, p. 773):

> "Nor are we told by what means the attachment has achieved its success; for all that appears it may have come into strong hands, especially able to exploit it."

It did come into strong hands in the sense that the plaintiff is a leading manufacturer of full-fashioned knitting machines. But the Record affirmatively shows that the success of the attachment was due to the utility of the device itself.

Struve, General Manager of the Apex Hosiery Company, operating 400 full-fashioned knitting machines with a production of 4,000 dozen pairs of stockings a day, testified that the attachment of the patent in suit is utilized on all of the Company's machines (R. I, 71). He testified to the various uses to which the attachment has been put by his Company, and stated that the device is all-important as an addition to the regular full-fashioned knitting machine (R. I, 72), "because it is very simple, accurate, easy to set, easy to operate, and it has great possibilities as far as design and reinforcements are concerned" (R. I, 72). Hemmerich, Superintendent of the Berkshire Knitting Mills at Reading, Pennsylvania, the largest full-fashioned hosiery mill in the world, manufacturing daily some 12,000 dozen stockings testified, (R. I, 60) that the attachment of the patent in suit is used on 1023 out of a total of 1180 of the Berkshire machines; that the device has proved highly satisfactory; that he regards it as all-important; and that a manufacturer would not want to buy a machine without it (R. I, 60). Goetsch, Superintendent of the Quaker Hosiery Company, of Philadelphia, operating 210 full-fashioned knitting machines and turning out about 2,000 dozen pairs of stockings a day, testified that the attachment is used on all but about 19 of his machines; that he has found the attachment successful and satisfactory; and that today he regards the attachment as indispensable (R. I, 127). The same evidence comes from defendant's president and general manager, Hirsch (supra p. 14).

Defendant has argued that the demand for the attachment was inspired by the appearance upon the market of a particular form of stocking known as the "cradle-foot" or "cradle sole". As a matter of fact, the development of the "cradle sole" did not inspire or lead to the bringing out of plaintiff's attachment; it was the bringing out of the attachment which led to the "cradle sole". (R. I, 60; 129; 224.)

The capital error of the Court of Appeals, in its consideration of the evidence of commercial success, was in limiting its inquiry as to previous demand to the five-year period antedating the Nusbaum device. For the reasons pointed out above, it is clear that the Nusbaum device could have given no aid in the solution of Schletter's problem. The Court of Appeals misunderstood the Nusbaum device.

While commercial success and universal adoption cannot take the place of invention, they are, under the decisions of this Court, cogent evidence of its presence, particularly where, as here, the device has filled a long-felt want. Paramount Publix Corp. vs. American Tri-Ergon Corporation, 294 U. S. 464, 474 and cases cited.

We respectfully submit that the Court of Appeals of the Second Circuit was in error in striking down the patent in suit for lack of invention and that the District Court in the instant case and the Courts in the Third Circuit were correct in overruling the defense.

Other Defenses.

On the assumption that respondent will seek to sustain the decree of invalidity of the patent in suit on one or more of the grounds presented to but not passed on by the Court of Appeals, said grounds will be discussed briefly.

A. Alleged Insufficiency of Disclosure.

The sole criticism of the defendant has to do with the lever connection between the pawl and ratchet for moving pattern chain 70 and the main cam shaft.

Referring to the perspective drawing, Plaintiff's Exhibit 15 (R. II, 366), no criticism is or can be directed to the patent drawings so far as concerns the showing of the

mechanism for operating the ratchets 21 and 22 for turning the spindle in opposite directions; the timing means for bringing the foregoing mechanism into operation, to wit, the movable shaft 42, the mechanism for shifting it under the control of the pattern chain 50, said pattern chain 50 being operated by pawl 53 with a suitable lever connection for actuating said pawl 53 from the main cam shaft; and the selective means for determining which of the ratchets 21 and 22 shall be rotated at a given time, said mechanism including the lever 73, with cords 74 and 75 connected to the pawls 25 and 26 respectively and moving one pawl into actuating position and the other pawl out of actuating position, said lever 73 being moved by the pattern chain 70 with its buttons 72. The alleged obscurity has to do solely with respect to the showing of the lever connection by which the pawl 71 is actuated from the main cam shaft 5, that is to say, the connection between the lever arm marked B in the perspective drawing (clearly shown in Fig. 1 of the patent drawings) and the pawl 71 at the back of the machine. This connection between lever arm B and pawl 71 is not bodily shown in the patent drawings, and evidence was received at the trial on the issue whether or not the form of the missing part would be understood by those skilled in the art and readily supplied. The evidence on the part of defendant consisted of the expression of an opinion by a professional expert, to the effect that he could not determine from the patent drawing how the pawling mechanism for the chain 70 was intended to work, and further that he did not think it would operate any way (R. I, 144, and see cross-examination 213-220 and Judge Lindley's comment, R. II, 751). On behalf of the plaintiff, three competent witnesses testified to the effect that the patent drawings and the specification could be readily understood by those skilled in the art; that anyone familiar with drawings would know the exact form of the missing connection; that the model, Plaintiff's Exhibit 11,

and drawing, Plaintiff's Exhibit 15, (R. II, 366) correctly represent what the patent clearly discloses, (Meyer, R. I, 44, 45; 79-83; 297, 298; 321, 322; Ischinger, R. I, 330, 331; Hamel, R. I, 334, 335). The witnesses also testified that a full-sized operative device was built in the form shown by the model, Plaintiff's Exhibit 11, and that said device operated successfully, and was capable of so operating indefinitely. (Meyer, R. I, 297, 298; Hamel, R. I, 335; Greiss, R. I, 304-307). Photographs of the test device are in evidence as Plaintiff's Exhibit 54 (R. II, 407).

This issue of fact was found in favor of the plaintiff by the District Court (Findings 10 and 11, R. II, 755; Opinion R. II, 751). The same conclusion had been reached by both Courts in the Hofmann suit, see Opinion of Judge Avis (Appendix A), and of the Court of Appeals (Appendix B), affirming the decree on the Opinion of the Court below.

The burden of proof on the defense of insufficiency of description and on the defense of inoperativeness is heavily upon the defendant. Webster Loom Co. vs. Higgins, 105 U. S., 580-586.

As the point comes before this Court, it presents a simple question of fact upon which there has been no conflict in the Courts below, and upon which all three Tribunals who have examined the point have concurred in finding for the plaintiff. Under such circumstances as this, it is not the practice of this Court to disturb the Fact Findings of the Trial Court.

Defendant's attempt to treat the lever connection alleged to be obscure as "what is claimed as the invention", or, as "the mechanism which constitutes the asserted and claimed invention", has no basis. The claims of the patent are not based in any respect upon any alleged novelty in the particular connecting part which is alleged to be obscure, nor any particular form selected for this part, but upon plaintiff-patentee's

entire new combination. Of course, to make the combination operative, power must be transmitted from the cam shaft to the pawl and ratchet for moving the pattern chain 70, but to refer to this connection as "what is claimed as the invention" or "the mechanism which constitutes the asserted and claimed invention", is obviously incorrect.

B. Alleged Inoperability of the Device of the Patent in Suit.

(1) *Failure of the patent in suit to show narrowing cams.*

It is necessary that rotation of the reversely threaded spindle be prevented during the narrowing operation, and that means be provided for preventing the cam rollers falling off the cams when the cam shaft is shifted in the narrowing operation. The evidence shows that wherever operative cams are placed upon the cam shaft of the full-fashioned knitting machine, they must be accompanied by narrowing cams, that is to say, idler cams or rollers, upon which such parts as are not intended to be actuated during the narrowing operation may rest when the main cam shaft is shifted in narrowing. (Meyer, R. I, 29, 30; 112, 113; Hamel, R. I, 300, 301; Greiss, R. I, 304-307).

Such narrowing cams are shown in the model, Plaintiff's Exhibit 11, where they are utilized in the usual manner (R. I, 113).

The witnesses referred to above also testified that neither rotation of the reversely threaded spindle during narrowing, nor the dropping of the cam rollers from their cams, would occur when the usual narrowing cams, required in all full-fashioned knitting machines, are supplied.

The failure of the drawings of the patent in suit to show the usual narrowing cams is of no significance, as the evidence above referred to clearly shows that anyone

familiar with knitting machinery would know that the narrowing cams were to be used, as they are a part of every knitting machine.

It has always been the law that a patentee in describing his invention need not show and describe well known things which those skilled in the art would recognize as intended to be employed in the utilization of the invention. As put by this Court (Carnegie Steel Co. vs. Cambria Iron Co., 185 U. S. 403, 437):

> "He may assume that what was already known in the art of manufacuring steel was known to them, and, as observed by Mr. Justice Bradley in Webster Loom Co. v. Higgins, 105 U. S., 580, 586, 'he may begin at the point where his invention begins, and describe what he has made that is new, and what it replaces of the old. That which is common and well-known is as if it were written out in the patent and delineated in the drawings.' "

(2) *Omission of mechanism for lifting or taking stops 7 out of operation.*

As to defendant's attack upon the patent on the ground that no mechanism is shown in the patent for lifting or taking out of operation the stops 7, which is in line with the argument based on absence of narrowing cams, the patent in suit points out (Spec. p. 2, lines 92, et seq.), that the stops employed are those of the well-known split-sole device and the evidence shows that well-known means were always provided in connection with said stops, both for preventing them from rocking or tilting, and for lifting them entirely out of the way when the stops were not employed. (See Meyer, R. I, 37-39; 86, 87, and the illustration of the split-sole attachment on page 54 of Plaintiff's Exhibit 6. See also Goetsch, R. I, 128.)

This point of defense was not raised in the Hofmann litigation, but here again is a point involving an issue of

fact found in favor of the plaintiff by the Trial Court (Finding 10, R. II, 755; Opinion R. II, 751, 752) and as to which there is no conflict of opinion below, and we submit that the finding of the District Court was without error.

C. Invalidity for Alleged Anticipation By One or More of Sundry Pleaded Prior Patents.

Defendant's Answer, with its amendments, cited over fifty patents and publications as anticipations. At the trial defendant's expert referred to twenty-five of the cited patents. In the Court of Appeals, defendant narrowed the list of alleged anticipations to nine, all of which, except three, (issued from sixty-five to one hundred years ago) had been cited and disposed of in the Hofmann suit.

For the convenience of the Court, these nine references are explained briefly in an appendix to this brief—Appendix C.

Patents have been cited which have to do with the control of narrowing points; others have to do with the control of full travel bars only; others, while showing devices for controlling short travel bars, are single-purpose devices, not involving Schletter's purpose or his mechanism; others show specially designed machines, and do not relate to attachments for full-fashioned hosiery machines; and still others relate to independent needle machines, not involving the control of carrier bars. Not one of the references meets the terms of the claims in suit, and not one meets Schletter's invention in substance. Further, not one of the many references represents the device which the defendant is now utilizing in infringement of the plaintiff's patent.

The District Court found that none of the patents or publications relied upon constitutes an anticipation (R. II, 755). The District Court and the Court of Appeals

for the Third Circuit reached the same conclusion in the Hofmann suit.

It has been repeatedly held in the decisions of this Court that an infringer may not create an anticipation by piecing together features claimed to be found in a number of disconnected prior patents in the same or other arts.

Bates v. Coe, 98 U. S., 31 (48);
Imhaeuser v. Buerk, 101 U. S., 647 (660).

We submit that there was no error in the decision of the District Court upon this point.

D. Invalidity of the Patent in Suit For Alleged Want of Commercial Utility.

By this defense, defendant raised the point that in the patent in suit the patentee showed and described a particular form of auxiliary stop particularly adapted to produce a type of split-seam claimed by the defendant not to be commercially useful.

The stops 7 are a well-known type of split-seam stop provided with an undercut portion, as clearly shown in Fig. 4 of the patent, and adapted to be rocked or oscillated when an open or so-called herring-bone suture seam is to be formed. (Spec. p. 2, lines 105 to 119.) The patent shows mechanism for oscillating the stops.

It is a fact that at the date when plaintiff placed the attachment upon the market, the closed split-seam had superseded the open split-seam in popular favor, (R. I, 105), but the claim that the open split was not commercial is directly against the evidence. (Hemmerich, R. I, 64, 65; 68; Goetsch, R. I, 128, 130, 131.)

Apart from that, however, the patent discloses a device adapted to be used, as well known in the art, for either open split-seam work or closed split-seam work, whichever the operator preferred, and also for making reinforced designs as specifically explained in the specification. It,

therefore, follows that even if it were true (which it is not) that the device shown and described could not be utilized at all for making any form of open split-seam at an angle to the wales of the fabric, there would still be no basis whatever for the defense of want of utility. The specific pivoted undercut stops shown in the patent in suit had been known and used for thirty years for split-seam work, both open and closed, and for splicing or reinforcing work, and when employed for the latter work, as well as for closed split-seam work, it was the practice by well known means to disconnect the oscillating means and use the stops without oscillation (Meyer, R. I, 37-39 ; Hemmerich, R. I, 66, 67). As stated in the patent, lines 92 to 98, page 2:

> "The special rod-stops 7,7 (see Fig. 1) employed in my novel attachment, act in a manner similar to the action of the well-known 'Split-foot' stops heretofore employed in making split-seam work, which stops, however, merely oscillated and did not travel lengthwise of the machine."

In other words, the stops and their function are well known, and what the patentee has done is not to invent a new form of stop, but his invention lies in controlling the movement of the stops lengthwise of the machine, which he does by his reversely threaded spindle and automatic reversing means, in conjunction with the regular control of the full-travel bars by the end stops.

Moreover, the patent expressly states that while a particular form of stop is shown in the drawings, the invention is not limited to the use of these specific stops nor to the making of any particular form of seam (see specification, page 2, line 101, and same page, lines 120 to 124). The reference to plain or solid stops, not undercut, for making spliced or plaited figures is a reference to stops which were thoroughly well known in the art and required no illustration. (R. I, 67, 87.)

Neither the patent in suit, nor the device there shown and described, nor any of the claims in issue, is limited to split-seam work—much less to two-needle open split as distinguished from four-needle, or to open split as distinguished from closed split.

The District Court's treatment of this subject will be found in its Opinion at R. II, 743, 744, and we submit it is clear that no error has been shown.

E. Alleged Delay in Filing a Disclaimer.

1. An alleged unreasonable delay in filing a disclaimer involves a special defense which must be pleaded. Zell vs. Bankers Utilities Co., 77 Fed. (2nd), 22; Trussell Manufacturing Co. vs. Wilson-Jones Co., 50 Fed. (2nd), 1027 at 1030; Burden vs. Corning, 4 Fed. Cases, 701 at 710; Worden v. Searls, 21 Fed. 406. No such defense was raised by the original pleadings or any amendment thereof.

2. Claims 7, 8 and 10 discussed under this point in defendant's brief in the Court of Appeals were not placed in issue by the pleadings, the plaintiff suing only on claims 1, 3, 14 and 15 of the patent in suit. Not only was there no notice of the defense in defendant's pleadings, but no reference was made thereto at any stage of the trial, and plaintiff obviously had no opportunity to submit, or reason for submitting, evidence on any such issue. It is not the practice of the courts to pass on the validity of claims not in issue, for the purpose of determining the necessity of a disclaimer with respect thereto. (Gamewell Fire Alarm Telegraph Co. vs. Municipal Signal Co., 77 Fed., 490; Sirocco Engineering Co. vs. B. F. Sturtevant Co., 209 Fed., 624; American Bell Telephone Co. vs. Spencer, 8 Fed., 509; Aluminum Colors, Inc. vs. United States Research Corp., 7 Fed. Sup., 609.)

3. Nothing in the Record establishes the invalidity of any of the said claims or tends to do so.

As to claims 7 and 8, the alleged invalidity is based upon the omission of narrowing cams, an attack without merit, which has been fully answered elsewhere (supra pp. 39, 40). As to claim 10, the witness Meyer (R. I, 89, 90), did not admit that the tilting of the stops referred to in that claim is not effected by pattern controlled means, as the claim requires, but merely stated that it is not effected by pattern *chain* controlled means. Further, defendant refers to auxiliary pattern chains 50 and 70, but has overlooked the pattern chain of the fullfashioned machine which shifts the main cam shaft in narrowing. The shifting of the cam shaft prevents the tilting of the stops, and in that sense, if in no other, the means for tilting the stops as set forth in the claim can be said to be pattern controlled. The fact that a disclaimer was filed is not an admission that the claim disclaimed was invalid or that a disclaimer was necessary (Permutit vs. Wadham, 13 Fed. (2nd), 454; United Chromium, Inc. vs. International Silver Co., 60 Fed. (2nd), 913; Lowell vs. Triplett, 77 Fed. (2nd), 556; Bay State Optical Co. vs. Klein, 20 Fed. (2nd), 915). In fact, the disclaimer entered by the plaintiff as to claim 10 contains no such admission.

4. Under the conditions here, the necessity for disclaiming could not arise until there had been an adjudication that the claims are in fact invalid. The plaintiff had the right to rely upon the presumption of validity as to the claims arising from the grant of the patent. (Ensten vs. Simon Ascher Co., 282 U. S. 445; Aluminum Colors vs. U. S. Research Corp., 7 Fed. Sup., 609).*

---

* As a matter of fact, the disclaimer was filed within thirty days after plaintiff's first notice of defendant's contention of invalidity of the claim. The matter, of course, was not in issue in the suit, and the first intimation of defendant's contention of invalidity came in defendant's brief.

F. Infringement.

Defendant's attachment is shown in the photographs, Plaintiff's Exhibit 2, (R. II, 354) and in the perspective drawing, Plaintiff's Exhibit 34 (R. II, 382), described at R. I, 54. It follows in all substantial respects plaintiff's commercial attachment as shown in Exhibit 33 (R. II, 381), explained at R. I, 52, and the Hofmann attachment involved in the prior litigation, Plaintiff's Exhibit 35, (R. II, 383), and see R. I, 56, 57. It responds fully in terms and substance to the claim in suit.

As in the case of plaintiff's commercial attachment, Plaintiff's Exhibit 15, and the Hofmann attachment, Plaintiff's Exhibit 35, defendant's attachment has a single chain for controlling the timing and selecting mechanism as a substitute for the two separate chains 70 and 50, shown in the patent in suit. The mechanical equivalency of a single pattern chain with two separate groups of buttons for the two separate pattern chains of the patent is obvious, (R. I, 52-55 and see opinion (R. II, 770, 771).

In fact, the equivalency is so clear that in the Hofmann suit, involving an attachment with a single chain and two rows of buttons, the mechanical equivalency of the controlling mechanism for that shown in the patent in suit was deemed so plain that infringement of the claims in suit was admitted by the defendant,—defendant's counsel in the Hofmann suit being the same counsel who are defending this suit.

The contention that claims 14 and 15 call in terms for two separate pattern chains is incorrect. The separate means referred to in the claim are the timing and selecting means, and obviously, these means are both pattern controlled, whether controlled by separate chains or by a single pattern chain with separate rows of buttons as an obvious equivalent.

In the Court below the defendant raised the point that defendant in its device is employing specially improved

stops adapted to make a two-needle split-seam; whereas, the specific form of stop shown in the patent in suit is only adapted to make a four-needle split which defendant claims is less desirable, but the claims in suit are not specifically directed to the use of oscillating undercut stops. Other claims, as for example, claims 11 and 12, are directed to that feature, but these claims are not involved in this litigation. The claims in suit are not directed to any specific form of stop, but to a combination of parts whereby stops of any well-known character, whether split-seam stops or splicing stops, are controlled and operated in a particular manner in connection with the cooperating parts of a full-fashioned knitting machine to make a wide variety of designs on hosiery. Obviously, defendant cannot escape a charge of infringement of claims such as these, merely because it employs in the combination of the claims a form of stop which permits the making of a particular seam which the defendant happens to select as more desirable than that made by the specific form of stop shown in the patent.

Furthermore, while the stops in defendant's attachment can be utilized to make a two-needle split-seam, they can also, at will, be utilized to make the four-needle split for splicing, in exactly the same form and manner as the stops in the plaintiff's commercial attachment.

What defendant is doing, therefore, is furnishing an attachment embodying the combination of the plaintiff's patent, and responding fully to the claims in suit, with an added device (the connection for raising and lowering the pin-stops) to adapt the device to make a particular form of split-seam. Such addition (of no use at all except with plaintiff's combination) cannot relieve defendant of the charge of infringement on well-settled principles (Walker on Patents (6th Ed.) p. 496; Sec. 409; Temco Electric Co. vs. Apco Mfg. Co., 275 U. S., 319; Malina vs. Grisman, 20 Fed. (2d) 406; Barber vs. Otis Motor, 231 Fed. 755, 762; Stebler vs. Riverside Heights Assoc., 205 Fed. 735, 739). But if it could, when it is shown, as it clearly is by the stipu-

lated photographs, that the added connection is adapted to be put out of operation and the pin stops used as ordinary split-seam and splicing stops, the whole argument attempted to be based on two-needle split falls to the ground —a machine that infringes part of the time is an infringement, although it may at other times be so operated as not to infringe. Wright Co. vs. Herring-Curtis Co., 211 Fed., 654, 655; Westinghouse Co. vs. Precise Corp., 11 Fed. (2nd) 209.

Where, as in this case, a patentee's device has achieved a commercial and practical success and has added something of real value to the industry, he is entitled to broad claims, and to a liberal construction of those which he has made. Sam'l B. Smith vs. E. H. Snow et al., 294 U. S. 1. There has been no division among Courts below on this question of infringement. We submit that there has been no error.

CONCLUSION.

In this case, we submit, the equities are clearly with the petitioner. Through the invention of the patent in suit, it has supplied an attachment which represents an undoubted advance in the industry. The device is of that type which it is the object of the patent system to encourage. The Courts of the Third Circuit, and the District Court in the instant case, found the patent valid after careful scrutiny. The Court of Appeals of the Second Circuit, in reaching a contrary conclusion, fell into error in the respects which have been pointed out.

We respectfully submit that the prayer of the petition should be granted, the ruling of the Court of Appeals reversed, and the decree of the District Court affirmed.

Respectfully submitted,

HUBERT HOWSON,
CHARLES H. HOWSON,
DEXTER N. SHAW,
WILLIAM A. SMITH, JR.

APPENDIX "A".

IN THE
DISTRICT COURT OF THE UNITED STATES
DISTRICT OF NEW JERSEY.

IN EQUITY.

E-4219.

TEXTILE MACHINE WORKS,
Plaintiff,

v.

ALFRED HOFMANN and ALFRED HOFMANN, INC.,
Defendants.

OPINION.
(Filed October 16th, 1933.)

AVIS, *District Judge:*

The bill of complaint in this cause alleges that the plaintiff is the owner of a certain patent, No. 1713628 issued to Richard E. Schletter on May 21, 1929, covering an attachment for flat knitting machines for the making of hosiery of full fashioned type, especially adapted for making clocks, reinforcing, split seam work, splicing, &c.; that defendants have infringed the patent, by the use of the appliances patented in an attachment sold and marketed by them, and prays for relie by injunction and accounting.

The answer admits the issuance of the patent, but denies that Schletter was the inventor of the improvements in the attachments for flat knitting machines, described in the Letters Patent and the other claims set forth in the bill of complaint, and affirmatively avers that Schletter had abandoned his invention, and did not assert any claim thereto until after others had independently made large investments in connection with the manufacture and sale to the public in the United States of attachments embodying his claimed invention; that plaintiff was and is barred by his abandonment of a prior application; that Schletter was not the inventor, and was barred by anticipation in sundry other patents, and by prior use by others. The answer further sets up various patents issued in the United States, Great Britain, Germany and France, various publications and users, claiming them to be a complete bar to plaintiff's right to an exclusive use of the attachment.

Based on these various allegations of fact, the answer claims that because of the state of the art as known at the time and prior thereto, the alleged invention or discovery did not involve invention, but exhibited nothing more than the exercise of mere mechanical skill.

At the opening of the trial, the bill of complaint against Alfred Hofmann, as an individual, was dismissed, on motion of defendant's counsel, and with the consent of counsel for plaintiff.

The claimed invention is a machine which can be attached to, or built with a flat or straight hosiery knitting machine, used for the purpose of making full fashioned stockings.

The basic knitting machine is constructed under the original "Cotton" invention, with such changes and improvements as have been made from time to time. The knitting is accomplished by a battery of straight needles operating with sinkers, dividers, &c., and by various forms of mechanism provided with power through arms, gears, slur cocks, carrier bars, shafts, rollers, clutches, cams, &c.,

and actuated by power transmitted from what is known as the cam shaft. Attached to these machines is a mechanical contrivance, called a narrowing device, by which the full fashioned stocking is made.

A full description of the operation of this full fashioned knitting machine, as detailed by the witnesses, does not appear to the Court to be necessary in the decision of the question at issue. It is sufficient to say that the operations of the machine are complicated, and by cooperation of all of its parts turns out a perfect product.

For the purpose of laying the thread for contact with the needles and attachments required to tie the knots and do the knitting, longitudinal reciprocating yarn guide carrier bars are arranged on the machines, their movements in both directions controlled by stops, so that the thread will be laid and knitted the required width of the material to be produced. The width of the main material is controlled by stops arranged at either end of the plurality of knitting sections, in which form the machines are usually assembled in practical operation. For the purpose of narrowing the fabric as desired, and prior to plaintiff's claimed invention, reversely threaded spindles were attached to each end of the plurality of machines, which operated by a pattern chain and buttons connected therewith, caused the stops to move inward toward each other, and in conjunction with a device which removed the threads from the outer needles, replacing them on the immediately adjoining needles, accomplished the narrowing and thus formed the full fashioned stocking, made to conform to the natural shape of the leg.

As new styles of hosiery were demanded by the purchasing public, the art advanced to meet the demand, and new attachments were added to accomplish split seam work, selvage reinforcement, splicing, Onyx and pointed heels, shadow clock work, &c.

The attachments were so contrived as to lay threads from the yarn carrier bars, on the needles, with a stroke

less than those carrying threads for the main material, and in cooperation with the main thread carriers, to accomplish the splicing, clock work, reinforcing, &c.

These various attachments, invented and used prior to the attachment represented by the patent in suit, have been demonstrated and described by sundry witnesses.

By manual manipulation of some character, they produced nearly or fully the same result as can be produced by plaintiff's attachment.

The plaintiff's patent describes a claimed new development, which consists of a connected reversely threaded screw spindle, which may be located on a knitting machine individually or at some point in a plurality of machines, with nuts mounted thereon, being stationed one on the right side and one on the left side of the screw, and spaced apart at such distance as may be desired; upon the rotation of the spindle in one direction, the nuts are brought closer together, and when operated in the other direction the distance between the nuts is widened. Attached to the nuts are tiltable stops, intended to limit the stroke of certain of the yarn carrier bars, by means of certain stationary lugs fastened to the bars, thus laying the additional thread on the needles at such point within the length or width of the material being knitted as may be desired, and producing splicing, reinforcing, clocks, or other inserts.

In addition, the patent contemplated the automatic control of movement of the reversely threaded spindle, so that by means of levers, pattern chains, pawls and ratchets, mechanically connected with the main cam shaft, the spindle may remain stationary or be revolved in either direction, causing the nuts to approach or recede from each other, and produce any desired pattern.

A further description, in this opinion, of the mechanism involved, appears to be unnecessary.

This suit involves five claims of the patent, which are as follows:

"1. In a straight knitting machine having cooperating yarn guide carrier bars, a pair of opposed stops for certain of said carrier bars which have a stroke less than the full width of the fabric being knitted, and a reversely threaded spindle for moving said stops toward and from each other to vary the stroke of the bars controlled by said stops.

2. In a straight knitting machine having cooperating reciprocatory yarn guide carrier bars, a reversely threaded spindle, stops connected to the spindle positioned to limit the traverse of certain of the cooperating carrier bars to less than the full width of the cloth being knitted, and pattern controlled means for turning said spindle to vary the distance between said stops.

3. A device as in claim 2, said pattern controlled means being constructed and arranged to turn said spindle either to increase or to decrease the distance between said stops.

14. In a straight knitting machine, a set of yarn guide carrier bars for operating yarn guides traveling less than the full width of the fabric being knitted, a spindle having reversed screw threads, stops operated by said spindle, means for turning the spindle in either direction, pattern-controlled means for determining the time of operation of the spindle, and pattern-controlled means for determining the direction of rotation of the spindle.

15. In a straight knitting machine, a set of reciprocating yarn guide carrier bars including bars having a stroke less than the width of the fabric being knitted, pair of stops for said guides, a reversely threaded spindle extending lengthwise of the machine, the respective stops being connected to the reversely threaded portion of the spindle for moving the stops simultaneously toward and from each other, pattern-controlled means for determining the time for such movement, and cor-

related pattern-controlled means for independently determining the direction of such movement."

Defendant admits that if the patent is valid, it has infringed, but sets up four reasons which it claims demonstrates the invalidity of the patent:

1. Because of insufficiency and inoperability of disclosure.

The disclosure of the drawings showed some deficiency in the imparting of motion to one of the pawls, intended to work one of the ratchets, which imparts motion to the reversely threaded spindle, but it appeared by the testimony that although this condition existed in the drawing, it required merely a matter of mechanical skill to arrange a lever or other mechanism, to be actuated by the cam shaft, to accomplish the result intended. It is apparent that if mechanism could be and was constructed, so as to automatically revolve the spindle in one direction, it would not be mechanically difficult to actuate the pawl which was to revolve the spindle in the other direction.

The explanation contained in the patent describing its operation and general method of imparting the power, in my opinion, overcomes the defect appearing in the illustration. This objection does not refer to the idea, but only to putting that idea into effect, which, it appears to me, is not a material defect.

2. Because of want of patentable novelty and complete anticipation.

It is true that the advance in the art, if any, as accomplished by Schletter in this patent, as we view it now after seeing the attachment operate and the result of its operation seems simple and appeals to one as exhibiting merely the result of mechanical skill, but, notwithstanding the fact that the so-called "Gotham" attachment interposed as an anticipation, and which of all offered most nearly coincides

with plaintiff's patent, had been used for possibly ten years, no one before Schletter had conceived the idea, that by simply providing a pawl and ratchet, which would operate the spindle in the opposite direction, a great advance would be accomplished. He apparently thought of this as an advance in the art, and set to work to accomplish it, by arranging automatic means, so that the spindle would remain stationary, or could be operated in either direction automatically and by predetermined pattern arrangement.

In my opinion, it has patentable novelty, and is an advance in the art over the so-called "Gotham" attachment, which automatically caused the nuts to move in one direction only, requiring the use of manual power to widen the distance between the nuts, or to revolve the spindle in an opposite direction. The last named attachment could not automatically vary the width of the clock or splice.

While the patent in suit combines much of the prior art, it describes and discloses an attachment which, applied to flat or straight full fashioned knitting machines, and used for the purpose of splicing, reinforcing, &c., accomplishes its purpose in a different manner, and as applied to the manufacture of hosiery, is a decided advance in the art, performing its function more expeditiously than any contrivance or attachment previously used.

See, Diamond Rubber Company v. Consolidated Rubber Tire Company, 220 U. S. 428; National Hollow Brake-Beam Co. v. Interchangeable Brake-Beam Co., (CCA 8) 106 F. 693; Krauth v. Autographic Register Co. (N. J.) 285 F. 199, 204.

There is a presumption of the validity of a duly issued patent, and an evidence of the advance of the invention of Schletter over the prior art, is the popularity of the attachment; the large sales, and the fact that defendant appears to be anxious to use it as an attachment to its flat hosiery knitting machines.

See, Kinloch Tel. Co. v. Western Electric Co. (CCA 8) 113 F. 659-665.

What has been said applies also to the contention of de-

fendant as to "complete anticipation". It is impossible in this opinion to analyze all of the patents presented, and about which testimony has been offered; suffice it to say that the Court has scrutinized the testimony, carefully read the briefs, and has concluded that none of the prior patents is anticipatory of the claims of plaintiff at issue in this suit.

3. The contentions of defendant because of prior knowledge and use, are, as the Court views all of the testimony, also disposed of herein.

While the plaintiff's attachment in a degree is evolved from the uses of former and other devices attached to flat knitting full fashioned machines, the question is the novelty of plaintiff's patent, of furnishing, as stated in defendant's brief, "the necessary mechanism for automatically imparting reverse motion to the spindle of the Gotham attachment".

Of course, this included the mechanism which reverses and advances the nuts and stops in a predetermined manner by use of pattern chains, or other automatic mechanical means.

4. The question of abandonment has been raised by defendant and is based upon the assumption that the facts indicate that Schletter intentionally abandoned his invention to the public.

The failure to prosecute the proceedings under the original application for patent, appears to have been due entirely to the negligence of the patent attorney.

There is no indication in the evidence that Schletter ever voluntarily intended to abandon his invention.

From the testimony it is evident that Schletter never knew of the letter of rejection until long after it was received by his attorney. The letter was received by the attorney on or about April 18, 1923, and Schletter was not notified until July 28, 1924.

The attorney testified that at a conference held August

5, 1924 with Schletter and others, no suggestion was made by him that the original application had been technically abandoned. After this conference, the attorney made no effort to revive the application, and it is apparent that later, Schletter, becoming discouraged because of lack of action, consulted another patent attorney, who, on or about May 20, 1925, wrote to the attorney handling the original application for information.

The filing of the second application was considerably delayed because of the tardiness of the draughtsman.

There seems to have been much uncalled for neglect and delay, but the testimony is quite clear that none of this was chargeable to Schletter personally.

I am convinced that Schletter never, by his actions, abandoned his invention, and the claim of abandonment cannot succeed in denying relief to plaintiff.

I find as facts:

(1) That claims 1, 3, 14 and 15 of the patent in question are valid.

(2) That said claims of patent are not anticipated by patents pleaded and offered in evidence, or voided by prior knowledge or use.

(3) That patentee Schletter did not voluntarily or intentionally abandon the invention as disclosed by the original patent application.

(4) That the defendant Alfred Hofmann, Inc., has infringed the aforesaid claims of the patent.

As to the law, I conclude:

That the patent being valid and infringed, the plaintiff is entitled to a decree enjoining defendant Alfred Hofmann, Inc., from the use of the attachment so infringing, and for an accounting for damages and profits.

Decree accordingly.

APPENDIX "B".

IN THE
UNITED STATES CIRCUIT COURT OF APPEALS
FOR THE THIRD CIRCUIT.

No. 5312. March Term, 1934.

ALFRED HOFMANN, INC.,
Defendant-Appellant,

v.

TEXTILE MACHINE WORKS,
Plaintiff-Appellee.

APPEAL FROM THE DISTRICT COURT OF THE UNITED STATES, FOR THE DISTRICT OF NEW JERSEY.

OPINION.
(Filed June 15, 1934.)

Before BUFFINGTON, WOOLLEY and DAVIS, *Circuit Judges.*

BUFFINGTON, *J.*

The patent involved in this case was so thoroughly discussed in Judge Avis' opinion that we find ourselves in no position to improve on what he has said. After due consideration, we are of opinion the decree below should be affirmed, and affirmed on his opinion. In so doing, we note that this patent presents an unusual state of affairs.

What was known as the "Cotton" knitting machine had been in use for many years. Its construction involved some one hundred patents. The machine cost $10,000. The plain-

tiff devised a mere attachment, costing some $350, which can be attached to the $10,000 machine, and gives the latter a wide sphere of manufacturing capacity which it did not before possess. This attachment was so valuable—and there is no contradiction as to this—that no one would now buy one of these $10,000 machines without having an attachment such as the plaintiff's patent disclosed. Its worth is evidenced by the fact that in four years following the issue of the patent, six thousand of these attachments were sold at a cost of more than $2,000,000. When this patent was disclosed to the plaintiff, an extensive manufacturer of knitting machines, the patentee was at once paid $20,000 for it. We have a finding by the patent office of the fact of invention. We also have the fact of invention found by the trial court. We see no reason to disturb such findings. Accordingly, the case is affirmed.

A true Copy:

Teste:

Clerk of the United States Circuit Court of Appeals for the Third Circuit.

APPENDIX "C".

DISCUSSION OF PRIOR PATENTS ADVANCED BY DEFENDANT AS ANTICIPATIONS. SEE SECTION C, PAGE 41 SUPRA.

Mather British Patent No. 7,476 of 1837.

This patent is explained by plaintiff's expert at R. I, 292. The machine is not a Cotton machine but an independent needle machine, and the reciprocating carrier bars involved in the combination of the claims of the patent in suit are, therefore, lacking.

There are two sets of thread carriers, one set for plain work and an additional set for making heel tabs. There is no reversely threaded spindle, and such spindles as there are, are turned solely by hand. As the reference thus relates to a different type of machine, does not involve an attachment, is not adapted for any type of work similar to that of the patent in suit, illustrates only hand-operated spindles, and therefore, discloses no mechanism of any character for automatic control, it is difficult to see what bearing the reference can be thought to have upon the subject-matter in controversy.

The yarn carriers in the independent needle machine are controlled in a manner totally different from that involved in the Cotton machine, and the problems involved are entirely different, (see Meyer in his discussion of the Rowlet Patent at R. I, 260, 261).

Roe British Patent No. 1991 of 1869.

This reference is discussed by plaintiff's expert at R. I, 288.

The machine is an independent needle machine. There are no auxiliary carriers for making designs, and such carrier control as there is in the machine is simply the usual control of carriers traveling the full width of the fabric being knitted, the sole purpose of changing the travel of the

carrier being for the usual narrowing of the stocking. It will thus be seen that the machine of the reference in its type, its product, and its functioning makes no approach whatever to the combination of the claims of the patent in suit. Further than that, no mechanism is shown for operating the narrowing spindles, and particularly, there is an entire absence of any reference to or suggestion of automatic reversing mechanism for the spindles. Plaintiff's expert disagrees with the suggestion made by the defendant's expert to the effect that the separate threaded spindles could be formed in one piece.

Willat, et al. British Patent No. 573 of 1871.

Plaintiff's expert discusses this patent at R. I, 286.

Here again, we have an independent needle machine. There is no reversely threaded spindle. Such spindles as there are, are at the opposite ends of the machine; and they are used solely for controlling the carriers traveling the full width of the fabric being knitted. In other words, there is no control of auxiliary short-travel carriers in combination with full-travel carriers and no design work of any character can be done. Furthermore, the operation of the spindles regulating the position of the end stops is entirely by hand, no automatic timing mechanism being disclosed or suggested. The reference makes no approach to being an anticipation of the subject-matter of the patent in suit.

Woodward British Patent No. 19,627 of 1891.

This patent is discussed by plaintiff's expert at R. I, 271.

Here again, the only stops are the regular end stops for full-travel bars. There are no auxiliary stops and no short-travel bars. There is a reversely threaded spindle for controlling the narrowing points and the end stops together, but even this is without the automatic reverse, being operable in one direction only, by hand. Obviously, there is no

approach to the combination of the claims of the patent in suit, and none of the work of the latter is a possibility.

At R. I, 176, defendant's expert suggested that certain changes might be made in the Woodward device and thereby it might be adapted to produce one of the types of work for which the attachment of the patent in suit can be employed, and the demonstration of machinery made by the defendant during the trial included what purported to be the mechanism of this Woodward patent for producing a spliced clock. Plaintiff's expert testifies, R. I, 272, that the device utilized in the demonstration and purporting to represent the Woodward patent did not, in fact, represent the Woodward patent, said patent nowhere giving any suggestion or indication that it, or any part of it, could be used for splicing work; and that the controlling mechanism shown in Woodward is not adaptable at all for use in the combination of the patent in suit. It is elementary that it is not sufficient to constitute an anticipation that the device relied upon might by modification be made to accomplish the function performed by the patent in question, if it were not designed by its maker, nor adapted when actually used, for the performance of such functions. Topliff vs. Topliff, 145 U. S., 156.

Sowter U. S. Patent No. 478,527 of 1892.

This patent is referred to by plaintiff's expert at R. I, 265. There is no reversely threaded spindle. The ordinary threaded spindles shown are for the control of the narrowing points and not for the carrying bars. The device is not an attachment, does not relate to full-fashioned hosiery machines and can do none of the work for which the attachment of the patent in suit is adapted and intended.

Lieber Knecht U. S. Patent No. 981,663 of 1911.

This device is discussed by plaintiff's expert at R. I, 262.

It shows a reversely threaded spindle (see Fig. 3) with stops or slides 23 and 24 for controlling the travel of yarn guide carriers. The purpose of the device is to reduce the shocks of blows incident to the striking of the carriers bars on the stops; and in connection with this, the reversely threaded spindle device shown in Fig. 3 is utilized at the center of the machine to control the carrier bars in place of the usual end stops. The device is thus one relating solely to the control of full-travel carrier bars, and lacking entirely any auxiliary stops for controlling the short-travel bars, and thus the whole substance of the subject-matter of the claims of the Schletter patent in suit is lacking. Further than that, the reversely threaded spindle shown in the Lieberknecht patent is operated automaticallly in one direction only, and in the other direction solely by hand. None of the work accomplished by the Schletter attachment is possible with this Lieberknecht device.

Lamb and Noon British Patent No. 15,129 of 1889.

This reference is discussed by plaintiff's expert at R. I, 281.

The sole purpose of the Lamb and Noon Patent is to provide a special form of knitting machine adapted to produce fabrics having downright (vertical) stripes by split-seam work. These stripes may vary somewhat in design—as illustrated in Figs. 3, 8 and 9—but the type of work is all the same—vertical stripes formed by split-seam work away from the selvages.

The fact that only split-seam work can be done is not in dispute in the record. Miller clearly states the type of work (R. I, 177) and Meyer unequivocally and without contradiction (R. I, 282) testifies that no splicing and reinforcing work can be done. This means that the Lamb and Noon machine was neither intended nor adaptel to do the greater part of the work for which the attachment of the patent in suit has found its utility, including the spliced

or reinforced clock-work referred to in the patent, and selvage reinforcements, such as utilized in the cradle-foot.

The patent says that plain knitting can be done *beyond* the stripe, *when the striping has been stopped* and the striping bars are locked out in the usual way. And it will be evident to the Court from the patent, and the description of the device as given by the experts, that if either of the bars 1 and 2 is to be used to traverse the entire width of the fabric, the use of the striping carriers must be eliminated, as the stops H and H′, necessary to control the inward movement of the bars 1 and 2 respectively when the striping bars are in action, prevent the travel of the bars 1 and 2 across the fabric. Use of full-travel bars and the striping bars in conjunction, which is necessary for splicing or reinforcing is neither contemplated nor possible.

The specially constructed machine for producing the single type of striped fabric involves the special striping carrier bars 3, 4 and 5 with their pair of one-way threaded spindles built into the machine at opposite ends thereof with separate controlling mechanisms also located at opposite ends of the machines, and with such end stops as are required for stopping carrier bar 1 at the right end of the machine (see Fig. 3) and bar 2 at the left end of the machine (see Fig. 3a). The stops GG′ which control the special carrier bars are mounted on the same slides which carry HH′ controlling the inward movement of the other bars (see patent page 3 at bottom) and these slides GG′ are mounted on the same brackets which carry the slides CC′ for the end stops. There are three sets of stops, one mounted on the ordinary narrowing slides with the usual spindles, and the others on additional slides provided at the ends of the machine in the same brackets with the usual narrowing slides, with an additional set of spindles (one built in at each end of the machine) for moving the additional slides.

Now it must be clear from what has been said that plaintiff's expert, Mr. Meyer, was correct when he said (R. I, 282) that the Lamb & Noon patent does not show an attachment, but a specially built machine for its own particular kind of work. As clearly shown by the patent in suit the "attachment" there referred to is a device adapted to be attached to the regular full-fashioned machine without alteration of any of the regular parts of the machine, or interference in any manner with the proper functioning of the regular machine whether said attachment is functioning or not. Such an attachment can be applied, either at the time the machine is built, or at any other time. The carriers and carrier bars are the regular carriers on the machine, and the function of the attachment is to provide an auxiliary control for such of the regular carriers as the operator may select, the full and proper functioning of all regular parts of the machine not being affected or interfered with in any way. Such an attachment is the direct antithesis of a machine, such as Lamb and Noon's, permanently provided with special striping bars controlled by spindles built into the bed of the machine, and with controlling stops the presence of which prevents the functioning of the machine as an ordinary knitting machine.

As has been fully pointed out, the claims in suit, when read as they must be, in the light of the specification, call for the combination, in the full-fashioned knitting machine, with its regular reciprocating carrier bars and the usual controlling mechanism therefor as required for the knitting of the full-fashioned stocking, of auxiliary stops for certain of said carrier bars, and a reversely threaded spindle, with suitable controlling mechanism for automatically turning the spindle in either direction—the combination permitting such control of all of the various carrier bars in the machine (by cooperation of auxiliary stops and end stops) as required for split-seam designs, or for spliced or reinforced designs at or away from the selvages. Lamb and Noon have no such combination in terms or in

substance. *They do not have the reversely-threaded spindle with its controlling mechanism as required by the claims, nor are such separate spindles and controlling means as they have, utilized with the regular carrier bars of the full-fashioned machine,* and obviously the combination of plaintiff's patent cannot be found in Lamb and Noon as the functions cannot be performed.

Defendant, of course, concedes the fact that the reference does not have the reversely threaded spindle called for by the claims, but argues that Lamb and Noon's separate spindles are simply "a reversely threaded spindle in two pieces instead of one piece". But this completely disregards the functions performed in the two cases. Lamb and Noon built in separate spindles at the opposite ends of their machine and utilized them with auxiliary stops there located (one at each end of the machine) to control their special striping bars. Schletter utilized his reversely threaded spindle for the automatic adjustment of auxiliary stops for the supplemental control of the regular carrier bars,—the spindle and its stops being so located (between the ends of the machine) as not to interfere with the regular fashioning devices, and permitting the use of the spindle and stops, not merely for making split-seam vertical stripes, but as well for various other types of design and reinforcing work, which have been fully described.

While spindle controlling mechanism is shown and described in the patent, this controlling mechanism comprises separate controls for the separate spindles, such control being located at the end of the machine with its respective spindle. The difference in the requirement of a controlling mechanism which can be used at the ends of the machine, as in Lamb & Noon, and a controlling mechanism suitable for the control of a reversely threaded spindle located between the ends of the machine, as in the patent in suit is pointed out at R. I, 272, 273; and there is not a syllable of evidence in the record to show that the spindle

controlling device shown and described in the Lamb and Noon Patent would be available for use in Schletter's combination.

This reference was cited and withdrawn by the Examiner in the Patent Office, was found insufficient by the Courts of the Third Circuit in the Hofmann suit and by the District Court here, and it is submitted that appellant has shown no error in these findings.

Muller U. S. Patent No. 1,564,438 of 1925.

This patent is referred to by plaintiff's expert at pages 408-411, 414 Rec. and as clearly explained by him would, even if early enough, fail to meet the Schletter invention. However the reference, as found by the District Court, is not sufficiently early to anticipate. The Muller application was not filed until October 20, 1923. Schletter's date of invention is June 19, 1922—see finding of fact 7 (R. I, 754). As no assignment of error was directed to this finding in the Court of Appeals, and that Court adopted the finding (Opinion, R. II, 771), it is not deemed necessary to refer the Court to the evidence in the record upon which the finding is based.

FILE COPY

OCT 13 1937
CHARLES ELMORE CROPLEY
CLERK

IN THE

SUPREME COURT OF THE UNITED STATES

No. 62. October Term, 1937.

TEXTILE MACHINE WORKS,
Petitioner,

vs.

LOUIS HIRSCH TEXTILE MACHINES, Inc.,
Respondent.

On Certiorari to the Circuit Court of Appeals for the Second Circuit.

Petitioner's Reply Brief.

HUBERT HOWSON,
CHARLES H. HOWSON,
DEXTER N. SHAW,
WILLIAM A. SMITH, JR.,
Counsel for Petitioner.

Lawyers' Book Printing Co., 825 Walnut St., Phila., Pa., Walnut 3781.

INDEX.

	Page
1. The Claims of the Patent in Suit	1
2. Gotham (Respondent's Brief, pages 34, 35)	4
3. Nusbaum (Respondent's Brief, pages 35-37)	6
4. The Patented Device is an "Attachment"	6
5. Alleged Want of Utility (Respondent's Brief, pages 46-52)	7
6. Infringement (Respondent's Brief, pages 53-57)	8

CASES CITED.

Consolidated Roller Mill Co. vs. Walker, 138 U. S., 124	3
Duncan vs. Stockham, 204 Fed., 781 (C. C. A. 7th)	3
Fowler & Wolfe vs. McCrum-Howell Co., 215 Fed., 905 (C. C. A. 2nd)	3
Hauser Co. vs. Anton, 233 Fed., 262 (264) (C. C. A. 6th)	3
Smokador Co. vs. Tubular Products Co., 31 Fed. (2nd), 255 (256, 257) (C. C. A. 2nd)	3
Waterloo Cement Co. vs. Engel, 230 Fed., 169 (170) 240 Fed., 976	3
Winget Co. vs. Kenilworth, 11 Fed. (2nd), 1 (C. C. A. 2nd)	3

IN THE

Supreme Court of the United States

No. 62. October Term, 1937.

TEXTILE MACHINE WORKS,
Petitioner,

vs.

LOUIS HIRSCH TEXTILE MACHINES, INC.,
Respondent.

PETITIONER'S REPLY BRIEF.

1. The Claims of the Patent in Suit.

At pages 16 and 17 of its brief, respondent argues that the claims are not directed to "full-fashioned machines" as distinguished from any other type of flat or straight machines. What respondent seeks to do is to have the claims read without any regard to the meaning of their terms as utilized in the specification, and thus defeat them by reference to entirely different devices, which are put forward by respondent as responding to the literal terms of the claims. It is thus, for example, that respondent permits itself to assert (page 10 and pages 35 to 37) that "every element of each of the claims in suit is present in the Nusbaum machine". The term "straight knitting machine" used in the claims is shown by the specifi-

cation to mean "full-fashioned knitting machine". This is the machine shown in the drawings, and see the following references in the specification:

"flat knitting machine for making hosiery of full-fashioned type"—page 1, lines 2, 3;

"an attachment for full-fashioned knitting machine"—page 1, lines 25, 26;

"conventional flat knitting machine"—page 1, line 41 (see reference to "conventional end stops at the ends of the machine"—page 4, line 32);

"full-fashioned knitting machine known as the 'Cotton Machine'"—page 1, lines 82, 83;

"narrowing of the leg portion"—page 2, lines 39, 40—(narrowing refers to fashioning);

"usual and well understood manner of making full-fashioned hosiery"—page 2, lines 47, 48;

"commence the formation of the clock or clocks midway of the narrowing operation of the web"—page 2, lines 56-58;

"any well-known full-fashioned knitting machine type and to such my novel attachment is connected"—page 2, lines 71-73;

"carrier bars stopped on outward movement by the conventional end stops at the ends of the machine"—page 4, lines 30-33;

"narrowing of the stocking"—page 4, lines 57, 58.

To read the expression "straight knitting machine" appearing in the claims as meaning "full-fashioned knitting machine" is not, as respondent argues, to read something into the claims which isn't there, but to give the terms of the claims the meaning which the specification clearly shows they were intended to have.

Claims are, of course, to be construed to cover the real invention, and where necessary, for this purpose, general language in a claim may be read as referring to the particular device shown and described, to which such general language applies; thus, it is proper to read the term "straight knitting machine having cooperating yarn guide carrier bars" used in the claims as referring to the full-fashioned hosiery machine with its reciprocatory carrier bars and the usual stops therefor with which the auxiliary stops recited in the claims, cooperate in the manner fully set forth in the specification. Smokador Co. vs. Tubular Products Co., 31 Fed. (2nd), 255 (256, 257) (C. C. A. 2nd); Fowler & Wolfe vs. McCrum-Howell Co., 215 Fed., 905 (C. C. A. 2nd); Winget Co. vs. Kenilworth, 11 Fed. (2nd), 1 (C. C. A. 2nd).

Remembering that the patentee's stated purpose was to supply an attachment for making ornamental designs on hosiery which at the same time was to be fashioned, it must be apparent, we think, that the "straight knitting machine having cooperating yarn guide carrier bars" must be read to refer to the full-fashioned hosiery machine shown and described in the specification and that the devices employed in such machine for operating the carrier bars, as, for example, the mechanism for moving them and the end stops on the narrowing mechanism by which the stroke of the carrier bars is controlled in fashioning, must necessarily be implied.

Clearly, claims are to be interpreted to include necessary operative adjuncts characteristic of the machine to which the claims are directed. Consolidated Roller Mill Co. vs. Walker, 138 U. S., 124; Duncan vs. Stockham, 204 Fed., 781 (C. C. A. 7th); Hauser Co. vs. Anton, 233 Fed., 262 (264) (C. C. A. 6th); Waterloo Cement Co. vs. Engel, 230 Fed., 169 (170); and 240 Fed., 976.

All of the courts which have had the patent in suit before them, including the Court of Appeals in the instant case, have read the claims as directed to a "full-fashioned" knitting machine, and we submit, properly so.

2. GOTHAM (RESPONDENT'S BRIEF PAGES 34, 35).

(a) Gotham was not an anticipation of Claim 1 of the patent in suit. It lacked "the pair of opposed stops" called for in the claim. The auxiliary stops in Gotham were not "opposed stops" in the sense of stops acting in opposition to each other to control one or more carrier bars provided with abutments shuttling back and forth between the said stops. The stops in Gotham acted on different carrier bars and were adapted and used for a purpose totally different from that of the opposed stops called for in Claim 1.

(b) As to the other claims in suit, there is no pretense that these are met by the Gotham device, and as to these, respondent resorts to the argument that they involved nothing but a duplication of the fashioning mechanism of the full-fashioned machine. If this were correct in point of fact, it would, of course, not follow that the subject of the claims was without invention, as the addition of a duplicate fashioning mechanism to cooperate with the regular fashioning mechanism in an entirely new manner and with an entirely new result, might well represent invention of a high order. Apart from this, however, respondent's fact proposition is wholly incorrect. As illustrative of the "fashioning mechanism" claimed to have been duplicated in the patent attachment, respondent refers (brief pages 32, 33) to the fashioning mechanism shown on page 42 of plaintiff's catalogue of 1920, Plaintiff's Exhibit 6. This mechanism is explained at pages 8 and 9 of our main brief. It includes reversely threaded spindles, controlled automatically for giving the narrowing points a peculiar motion of their own, and, also one-way threaded spindles for moving the end stops automatically in one direction only. There was no reversing mechanism for controlling the latter spindles, and the controlling mechanism for the reversely threaded spindles for the narrowing points was wholly unsuited for the automatic con-

trol of the reversely threaded spindles of the device of the patent in suit.

When, therefore, respondent argues that the timing and selective mechanisms, referred to in the claims in issue, represent a mere duplication of the fashioning mechanism of the full-fashioned machine, it advances an argument without factual support. As pointed out in our main brief (page 32), the operating and selective mechanisms, employed with fashioning spindles at the ends of the machine, were not adapted for use in the combination of the claims in suit; and respondent has pointed out no controlling mechanism in the prior art adapted for such use.

(c) There was no acquiescence by the patentee, Schletter, in the rejection of certain of his claims on the Cotton British patent. There had been no final action by the Examiner finally rejecting the claims on Cotton British patent; and under the practice of the Patent Office, the applicant was either free to present an argument pointing out the differences between the references and the claims as they then stood in the application, or he was free, under the express provisions of the rules of the Patent Office, to overcome the reference by carrying his own date of invention back prior to the effective date of the reference by means of affidavits. Inasmuch as his date of invention was earlier than the date of the reference, the applicant elected to furnish the necessary evidence of that to the Patent Office, which he did. Obviously, the applicant's election to dispose of the reference by relying upon his own earlier date cannot be taken as an acquiescence in the position of the Examiner with respect to the effectiveness of the Cotton patent as a reference, nor can the action of the Examiner be taken as a final holding on the part of the Patent Office to the effect that the reference fully met the claims then in the case, for, as stated, the action of the Examiner never reached the point of final rejection.

3. Nusbaum (Respondent's Brief pages 35-37).

In order to read the claims in suit on the Nusbaum machine, respondent is forced to ignore the meaning of the term "straight knitting machine" as used in the specification to refer to the full-fashioned machine. This point has been discussed above page 2. The clear distinction between the patented attachment for providing designs for full-fashioned stockings and the make-shift Nusbaum device which turned a full-fashioned machine into one which could do no fashioning has been pointed out at pages 28 to 30 of our main brief.

At page 37 of its brief, respondent refers to the decision of the Court of Appeals "to the effect that the patent in suit disclosed no invention over either the Gotham or Nusbaum devices". The Court of Appeals did not hold that either Gotham or Nusbaum was sufficient to deprive the claims of the patent in suit of invention. On the contrary, the Court of Appeals found it necessary to couple the two prior devices, and in this, that Court, we submit, fell into error for the reasons fully pointed out at pages 30 to 32 of our main brief. Respondent, in its discussion of the Gotham and Nusbaum devices, makes no effort to justify the proposal of the Court of Appeals to combine the two uncombinable devices. It dodges this issue by attempting to read the decision of the Court of Appeals as holding either Gotham or Nusbaum alone sufficient to defeat the claims.

4. The Patented Device is an "Attachment".

At pages 14 and 15 of its brief, respondent asserts that by referring to the patented device as an *attachment* for the full-fashioned machine we seek to differentiate that device from prior structures *built into the machine as part*

of its initial fabrication. We make no such distinction and there appears to be little excuse for respondent's contention in that regard, as we have clearly pointed out that a great merit of the patented "attachment" is its adaptability either to be applied to an old machine or to be built into a new one. The reason for this is that, as the title of the patent and its specification, and the device itself, all clearly show, the device is one adapted to be attached to the regular full-fashioned knitting machine *without alteration of any of the regular parts of the machine or interference in any manner with the proper functioning of the regular machine,* whether said attachment is fuctioning or not. It is thus that the attachment is applicable to the machine either at the time the machine is built or thereafter, and it is thus that the attachment can cooperate with the regular parts of the full-fashioned machine in the manner clearly explained in the specification—see page 12 of our main brief.

This distinction was completely missed by the Court of Appeals, when it referred to the Nusbaum device as an "attachment"—see pages 28, 29 of our main brief. Nusbaum provided no "attachment" for his full-fashioned machine, but used his regular fashioning screws for design purposes and thereby eliminated fashioning.

The fact that the term "attachment" is not used in the claims is immaterial. It is the combination of elements set forth in the claims which creates the "attachment".

5. Alleged Want of Utility (Respondent's Brief, pages 46-52).

Respondent's argument on this point may be confusing, being based upon an earlier Schletter application filed in 1922. The earlier application had become abandoned before the application which resulted in the patent in suit was filed, and as the latter was an entirely new application with a different specification, reference to the earlier

abandoned application is irrelevant. The new application involved a new and independent proceeding.

The answer to respondent's point will be found at pages 42 to 44 of our main brief. As there pointed out, and as the District Court found, the disclosures of the patent in suit are not at all limited to the single specific type of work criticised by respondent, and the claim of lack of utility therefore has no basis. In fact, splicing or reinforcing work, as distinguished from split-seam work in general, is set forth in the patent in suit as the primary object.

Furthermore, if the disclosures of the patent were limited to split-seam work as distinguished from splicing or reinforcing work, and further, to *open* split-seam as distinguished from *closed* split-seam, respondent to make its point would have to go still further and limit the disclosure to a *two-needle* open split (styled by respondent "herring-bone") as distinguished from a *four-needle* open split. This, however, respondent does not even attempt to do, as the rocking undercut stops of the patent in suit are just as available for a four-needle open split as for a two-needle open split, the patent specification containing no indication as to any such detail. Any claim that the four-needle open split is non-commercial would be directly against the evidence. (Hemmerich, R. I, pp. 64, 65, 68; Goetsch, R. I, pp. 128, 130, 131.)

6. Infringement (Respondent's Brief, pages 53-57).

In addition to what has been said at pages 46 to 48 of our main brief, it is only necessary to point out:

(a) The correspondence between the applicant and the Examiner, referred to on page 46 of respondent's brief, had to do with the use of a pattern chain for the attachment separate from the regular pattern chain always present on the full-fashioned machine for controlling the movement of the main cam shaft, and had nothing whatever to do with the use of two separate pattern chains for the timing and selective means employed in the attachment.

(b) As to the argument on pages 56 and 57 to the effect that Schletter in a later patent obtained a claim for a single pattern chain as distinguished from the two pattern chains shown in the patent in suit, this would be quite immaterial, if true, because an improvement upon one element of a combination does not at all mean that such improvement can be used without infringing the original combination. However, an examination of the later Schletter Patent (R. II, p. 441) will show that none of the claims is directed to a single pattern chain, per se, or to a combination in which the only difference from that of the patent in suit is the substitution of a single pattern chain for two pattern chains. Claim 10, referred to by respondent, has nothing to do with the subject; and Claim 15, which does include a single pattern chain as one element also includes other features which distinguish the later device from that of the patent in suit.

Respectfully submitted,

HUBERT HOWSON,
CHARLES H. HOWSON,
DEXTER N. SHAW,
WILLIAM A. SMITH, JR.

FILE COPY

Office - Supreme Court, U. S.
FILED
MAY 22 1937
CHARLES ELMORE CROPLEY
CLERK

IN THE

Supreme Court of the United States

October Term, 1936

TEXTILE MACHINE WORKS,
Petitioner,

vs.

LOUIS HIRSCH TEXTILE MACHINES, INC.,
Respondent.

No. 62

MEMORANDUM OF RESPONDENT ON PETITION FOR WRIT OF CERTIORARI.

SAMUEL E. DARBY, JR.,
Counsel for Respondent.

IN THE

Supreme Court of the United States

October Term, 1936

TEXTILE MACHINE WORKS,
Petitioner,

vs.

LOUIS HIRSCH TEXTILE MACHINES, INC.,
Respondent.

No. 993

MEMORANDUM OF RESPONDENT ON PETITION FOR WRIT OF CERTIORARI.

It is correct, as recited in the petition for writ of certiorari, that the Circuit Court of Appeals for the Second Circuit, in an opinion written by Judge LEARNED HAND, invalidated claims 1, 3, 14, and 15 of Letters Patent No. 1,713,628 (87 Fed. (2d) 702), and that prior thereto the Court of Appeals for the Third Circuit, in an opinion written by Judge BUFFINGTON, the same claims of the patent had been held to be valid.

However, respondent feels it is charged with the duty of pointing out to this Court:

(1) The record before the Court of Appeals for the Second Circuit was different in many important respects from that before the Court of Appeals for the Third Circuit; new defenses were presented; and additional and clarifying evidence of a most

persuasive nature was adduced bearing on some of the defenses which had been presented in the Third Circuit case (see *Smith* v. *Hall*, 81 L. Ed. 648).

(2) The case in the Third Circuit (*Textile Machine Works* v. *Alfred Hofmann, Inc.*) has been settled, and a final decree entered therein. So far as can be ascertained from the records in the Patent Office, and so far as we know, there is no pending litigation on the patent which would be affected by the decision of this Court in the event a certiorari is granted.

Conclusion.

If, in view of the foregoing, a review of the present case is deemed by this Court to be appropriate, respondent does not oppose the grant of certiorari and is prepared to convince this Court of the soundness of the decision of the Court of Appeals for the Second Circuit.

Respectfully submitted,

SAMUEL E. DARBY, JR.,
Counsel for Respondent.

Dated: New York, N. Y.
May 21, 1937.

FILE COPY

Office - Supreme Court, U. S
FILED
OCT 30 1937
CHARLES ELMORE CROPLEY
CLERK

IN THE

Supreme Court of the United States

October Term, 1937

No. 62

TEXTILE MACHINE WORKS,
Petitioner,

vs.

LOUIS HIRSCH TEXTILE MACHINES, INC.,
Respondent.

BRIEF FOR RESPONDENT.

SAMUEL E. DARBY, JR.,
WALTER A. DARBY,
Counsel for Defendant.

INDEX

	PAGE
Subject Matter of the Patent	2
The asserted "invention" of the patent	6
The claims	8
Summary of Argument	11
Argument	12
POINT I—The patent is invalid for failure to disclose the invention	18
Origin of disclosure in the abandoned application	19
The disclosure by the patent in suit	20
This mechanism was absent from Schletter's machine	22
POINT II—The patent is invalid for inoperability of disclosure	26
POINT III—The patent is invalid because of anticipation by and want of patentable novelty over prior commercial structures	31
The Gotham attachment	34
The Nusbaum machine	35
POINT IV—The Schletter patent is invalid because of anticipation by and want of novelty over prior patented art	38
Mather British Patent 7476 of 1837	38
The Lamb and Noon British Patent 15129 of 1889	40
POINT V—The patent is invalid for want of utility	46
The first Schletter application	47
POINT VI—The patent is not infringed	53
Conclusion	57

Cases Cited.

	PAGE
Aron v. Manhattan Railway Co., 132 U. S. 85	23
Beidler v. United States, 253 U. S. 447	18
Cadwell v. Firestone Rubber Co., 13 Fed. (2) 483; 23 Fed. (2) 1000	53
Cinema Patents Co. v. Warner Brothers Pictures, Inc., 55 Fed. (2) 948; 66 Fed. (2) 744	53
Hill v. United States, 234 Fed. 39	23
Kirby v. Talmadge, 160 U. S. 379	23
LeRoy et al. v. Tatham, 14 How. 156	23
Lopulco Systems v. Bonnot, 24 Fed. (2) 510	47
Minerals v. Butte, 250 U. S. 349	23
Permutit Company v. Graver Corporation, 284 U. S. 52, 58	24
Westinghouse v. Boyden, 170 U. S. 537	53
Wigmore on Evidence, Sec. 285	23

IN THE

Supreme Court of the United States

October Term, 1937

No. 62

TEXTILE MACHINE WORKS,
Petitioner,

vs.

LOUIS HIRSCH TEXTILE MACHINES, INC.,
Respondent.

ON CERTIORARI TO THE CIRCUIT COURT OF APPEALS OF THE SECOND CIRCUIT.

BRIEF FOR RESPONDENT.

This cause is here on writ of certiorari issued to the Circuit Court of Appeals for the Second Circuit in a patent infringement suit involving claims 1, 3, 14 and 15 of Schletter Patent No. 1,713,628, issued May 21, 1929, on an application filed November 5, 1925.

The Second Circuit Court of Appeals declared these claims of the patent to be invalid expressly for want of invention and impliedly for want of disclosure of the invention claimed, thereby reaching a conclusion, on the record before it, different from that reached by the Court of Appeals for the Third Circuit in a prior litigation involving

the patent entitled *Textile Machine Works* v. *Alfred Hofmann, Inc.*, originating in the District Court of New Jersey.

In the *Hofmann* case, Judge Avis, who up to the time of the trial had had little, if any, experience in patent matters, found the same claims of the Schletter patent to be valid and infringed (4 Fed. Supp. 837). The Court of Appeals for the Third Circuit, just prior to its summer recess, per Judge Buffington, affirmed the decree of Judge Avis in an opinion which neither mentioned nor discussed the specific defenses or the issues raised by the appeal (71 Fed. (2d) 973).

As will be hereinafter pointed out, and by comparison with the record in the *Hofmann* case (here before the Court in the present case as Plaintiff's Exhibit 3) it will be seen, the structure here charged to infringe the patent is different in many important and vital respects from the defendant's structure in the *Hofmann* case. In consequence, the present case includes the defense of non-infringement, which issue was not before the Third Circuit courts. Moreover, new and controlling evidence is here presented bearing on the question of validity of the patent that was not before the Third Circuit courts, and there are several other important issues raised by the present record which were not raised or considered by the Third Circuit courts in the *Hofmann* case.

For convenience, petitioner and respondent will be hereinafter referred to, respectively, as plaintiff and defendant.

Subject Matter of the Patent.

The patent in suit is directed to certain mechanical instrumentalities attached to or forming part of *flat* or *straight* knitting machines such as are widely employed for

manufacturing *full fashioned* garments such as silk stockings, underwear, sweaters, etc.

The characteristic feature of a *flat* or *straight* knitting machine is that the garment is knitted in a *flat* condition *in one piece.* The terms "flat" or "straight" are used synonymously.

A *full fashioned* garment is one which, during the knitting thereof, is *shaped* by increasing or decreasing the width of the fabric to conform the shape thereof to the shape of that part of the body for which the garment is intended. For example, a full fashioned sweater is one that has been shaped during the knitting thereof, to the shape of the body. Thus, if the knitting of the sweater is started at the wide hip portion, it is "narrowed" at the waist portion, and again "widened" at the shoulder portion. Similarly, a full fashioned stocking is one that has been shaped, during the knitting thereof, to the shape of the leg, and hence is wider at and above the calf of the leg than it is at the ankle. Because a stocking is knit starting at the widest portion (at the top of the stocking) and is "fashioned" progressively towards the calf and ankle (the narrowest portion) only "narrowing" is necessary, and "widening", as is utilized in fashioning other garments, such as sweaters, underwear, etc., is dispensed with.

After a "fashioned" fabric is knitted in a single, flat and shaped piece, the edges are sewed together by a "seam" to form the completed garment.

Consequently, *a flat or straight full fashioned* knitting machine is one which is provided with mechanism for making a flat fabric wider or narrower as it is being knit.

Flat or straight knitting machines have been in use since 1864. Attachments for such machines for effecting "fashioning" either to "narrow" or "widen" the knitted garments have been in use and known for over sixty years.

The patent in suit purports to disclose certain mechanical instrumentalities attached to or forming part of a flat full fashioned knitting machine, *together with the necessary mechanism to render these instrumentalities operative.*

Figures 1 and 2 of the patent disclose, in assembled condition, these various instrumentalities. They consist essentially of a rotatable spindle 11, having "reverse" threads on opposite sides of its central point. In other words, the threads on one end of the spindle run in one direction, and the threads on the opposite end thereof run in an opposite direction.

Mounted on the respective ends of the spindle are two threaded nuts 9, with the result that when the spindle is rotated in one direction or the other the nuts move towards or away from each other. Carried by the nuts 9, to move therewith, are thread carrier stops 7 which are adapted to limit the travel of thread carrier rods 6 (see Fig. 2). These rods have mounted thereon thread carriers which supply the yarn which is operated upon by the needles of the machine to knit the fabric.

Thus, the sole purpose and function of the apparatus thus far described is to control, by means of the movable stops 7, the distance of travel of thread carrier rods—and hence control the length of yarn supplied to the needles by those thread carrier rods.

To enable the variation of thread carrier travel in both directions, *i. e.*, to increase or decrease the travel of the carrier rods, (viz: to move the stop nuts away from or toward each other), the spindle 11 is provided at its end with two ratchet wheels 21 and 22 and cooperating pawls 23 and 24, whereby, when one pawl actuates its complementary ratchet wheel the spindle will rotate in one direction, and when the other pawl actuates its complementary ratchet wheel the spindle will rotate in the opposite direction.

To render the variation "automatic" and effected by the power which actuates the entire knitting machine, so that such variation will occur during the fabrication of a complete stocking structure (for the purpose of making designs, etc.), mechanism is provided for imparting power to the pawls from the main cam shaft 5 of the knitting machine. The automatic feature is effected by means of two separate pattern chains, one shown at 50 and the other at 70. The pattern chains each consist of an endless belt on which are mounted "buttons". Step by step travel is imparted to the chain from the main cam shaft of the machine, and when the buttons mounted on the chain reach a certain part of the machine in their travel (for example, as shown in the patent in suit, when the buttons on pattern chain 50 reach the wheel 54) they actuate some lever or other type of mechanism to cause whatever mechanical operation may be desired. It will be seen, therefore, that by varying the number and position of the buttons any desired "pattern", design, or, for that matter, any desired mechanical operation is effected.

In the structure of the patent the buttons on the pattern chain 50 determine *when* the spindle 11 is to be rotated, and the buttons on the similar pattern chain 70 determine *in which direction* the spindle 11 is to be rotated by selecting which of the pawls and its complementary ratchet will be actuated.

Thus, the disclosure of the patent in suit may be briefly summed up as comprising a reversely threaded spindle with thread carrier rod stop nuts mounted thereon, with separate and independent pattern chain control means for automatically and selectively actuating the reversely threaded spindle in *either* direction.

The asserted "invention" of the patent.

To crystalize what is asserted to be the "invention" of the patent over what preceded it, we refer to an attachment to knitting machines known as the "pointed heel" attachment, concerning which there is no dispute either as to its construction and mode of operation, or as to the fact that it was used extensively in the art many years prior to the earliest date claimed for the patent in suit.

Since at least as early as 1912 the hosiery industry has been employing these "pointed heel" attachments with flat or straight full-fashioned knitting machines of the Cotton type for reinforcing (splicing) the heel portion of the stocking. The most common form of this attachment consists of a reversely threaded spindle on which is mounted two spaced stops which move in unison toward or away from each other, depending upon the direction of rotation of the spindle. Such an attachment is illustrated in the so-called "Gotham" attachment here before the Court as Defendant's Exhibit Q[1], and, as a matter of convenience we reproduce here a perspective drawing thereof in evidence as Exhibit T[1] (found in Vol. II, p. 839). The Gotham attachment consists of a spindle (1) having reverse threads (2, 3) at the opposite ends thereof. Each of the threaded ends of the spindle have mounted thereon a threaded stop (8) so that when the spindle (1) rotates in one direction the stops (8, 8) move toward each other; and when the spindle (1) rotates in the opposite direction, the stops move away from each other. The traveling stops (8, 8) control the distance of travel of thread carrier rods which lay a reinforcing thread (in addition to the main body thread) at the heel portion of the stocking. Because the reinforcement was *pointed* (*i. e.*, the reinforcement met at a point above

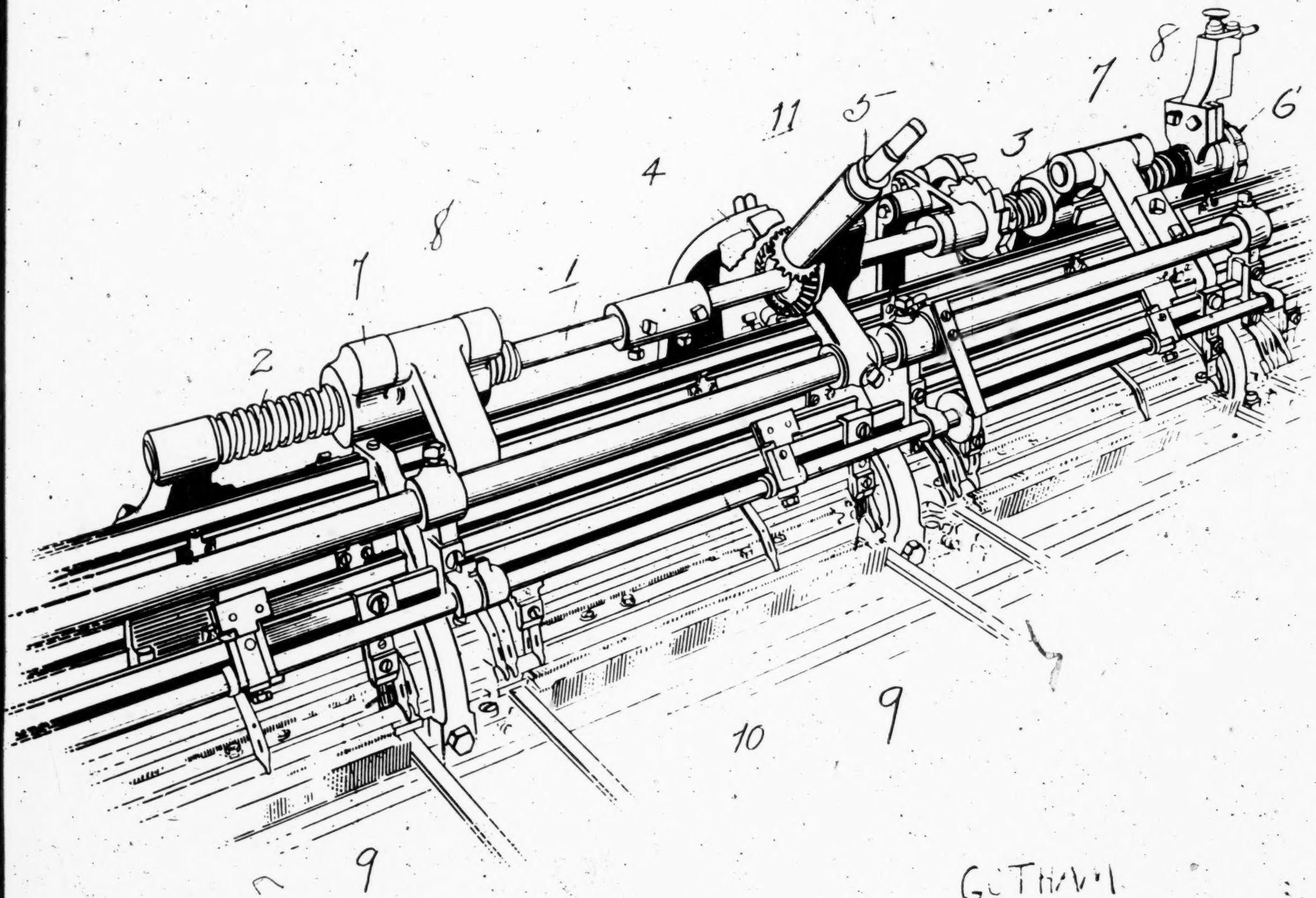

GOTHAM

the heel of the stocking, and gradually widened therebelow), it was necessary to automatically rotate the spindle only in one direction. When the stocking is completed, the spindle is rotated by hand (by mechanism 4, 5) in the opposite direction so that the stops move away from each other and are returned to their initial starting point for fabrication of the next stocking. This manual operation is termed "racking out". To automatically rotate the spindle in the one direction by which it was automatically rotated by power from the main cam shaft of the knitting machine; the spindle was provided with a ratchet wheel (unnumbered, but just to the right of the "racking" mechanism) which was actuated by a pawl, in turn actuated by mechanism put in operation in accordance with the "button" pattern of the old, well-known pattern chain.

In addition to the plaintiff conceding that this type of reversely threaded spindle attachment was used extensively in the art since at least 1912 (Brief, p. 18) it is also conceded that the structure and operation of the attachment is identical in every respect with that of the patent in suit insofar as automatic, pattern chain controlled rotation of the spindle in *one* direction is concerned. It is apparent, therefore, and is likewise conceded by plaintiff, that the only essential difference, structurally or otherwise, between the old Gotham pointed heel attachment and that of the Schletter patent in suit resides in the fact that, while the reversely threaded spindle of the Gotham attachment was automatically rotated in *one* direction, by power derived from the main cam shaft of the machine, the reversely threaded spindle of the patent is selectively rotated in *either* direction by power transmitted from the main cam shaft of the machine. In other words, to reduce the matter to its simplest terms, the Gotham attachment supplied the reversely threaded

spindle with the necessary mechanism between it and the main cam shaft of a knitting machine for automatically rotating the spindle in *one* direction, and the patent in suit proposed to add thereto the necessary mechanism for selectively rotating the spindle in the opposite direction as well.

It is quite obvious, therefore, that the alleged invention of the patent—the sole contribution made by the patentee—consists alone of the mechanism for selectively actuating the reversely threaded spindle of the Gotham attachment in the direction opposite to that in which the mechanism of the Gotham attachment automatically rotates it—or, stated in another way,—in the direction in which the spindle of the Gotham attachment was rotated by hand.

The claims.

An examination of the four claims in suit makes it perfectly apparent that this alone is what is *claimed* as the invention. Thus, claim 14 is directed to the combination in "a straight knitting machine" comprising:

(1) a set of yarn guide carrier bars for operating yarn guides traveling less than the full width of the fabric being knitted.

(2) a spindle having reversed screw threads,

(3) stops operated by said spindle,

(4) *means for turning the spindle in either direction,*

(5) pattern controlled means for determining the time of operation of the spindle, and

(6) *pattern controlled means for determining the direction of rotation of the spindle.*

Claim 15 is directed to the identical combination in slightly different language.

It will thus be seen that these claims depend for their patentability over the Gotham attachment on the "means for turning the spindle in *either* direction" and "pattern control means for determining *the direction* of rotation of the spindle".

Claim 1 recites the combination:

> "In a straight knitting machine,
>
> (1) a pair of opposed stops for certain of said carrier bars which have a stroke less than the full width of the fabric being knitted, and
>
> (2) a reversely threaded spindle for moving said stops toward and from each other to vary the stroke of the bars controlled by said stops."

It will be noted that this claim reads squarely, element for element, upon the Gotham attachment.

Claim 3 is a form of claim, used extensively in British patents, which "builds on" claim 2. Claim 2 adds to the combination of claim 1 the element:

> (3) "pattern controlled means for turning said spindle to vary the distance between said stops",

and claim 3 further defines the "pattern control means" as:

> (4) "being constructed and arranged to turn said spindle *either to increase or decrease the distance between said stops*".

At the outset of the case, therefore, we call attention to the fact that while the *asserted* and *claimed* invention of the patent consists of the necessary mechanism to automatically

and selectively rotate the reversely threaded spindle of the old Gotham attachment in the one direction that it had theretofore been rotated by hand—*that mechanism is neither shown nor described in the patent.*

In addition to the "Gotham" attachment of the prior art, there is evidence in the case of another prior structure identified as the "Nusbaum Machine", which is just as aptly pertinent to the question of novelty of the attachment of the patent in suit as is the Gotham attachment (see drawing thereof, Vol. II, p. 840; and photographs, Vol. II, pp. 830-838). This mechanism has been in existence since 1917. A comparison of this mechanism with the claims of the patent in suit will show that it contains every element of each of the claims in suit, and that each element operates in the same manner and in the same relation to each other as specified in said claims.

The Court of Appeals for the Second Circuit held that the claims of the patent in suit were invalid for want of invention over these two structures. With respect to the Gotham attachment it stated that though it would not have been available to the patentee for his purpose as it stood, and that it therefore did not literally anticipate his invention, it certainly pressed very closely upon it, and left at best a slim margin for invention. It held that this Gotham attachment left nothing which could be called an invention "but the train automatically to reverse the rotation of the screw shaft by the pattern belt" (Vol. II, p. 771).

With respect to the Nusbaum device the Court of Appeals for the Second Circuit stated, in effect, that the Nusbaum mechanism supplied the train of mechanism which was lacking in the Gotham attachment, and held that if there was any novelty left in the patent at all it was because of the novelty of the conception of putting the Nus-

baum attachment upon a "full fashioning" machine because of the technical difficulties of executing that conception. However, it did not consider that the conception of putting the Nusbaum attachment upon a full fashioned machine as involving invention, and also that in so far as the working out of the conception was concerned, though it might be possible that there were, in fact, obstacles enough present to call for substantial inventive capacity, *the patentee did not show in the patent how they were to be overcome.* In other words, the Court held that the patentee had failed to disclose in his specification the only possible invention he could have made, and therefore the working out of the conception was either so plain that it required only commonplace skill, or the specifications are insufficient because they do not give the necessary directions to execute the conception.

Summary of Argument.

The points of argument, in the order in which they will be presented, are:

A. The Schletter patent in suit is invalid because of—

(1) failure to disclose the claimed invention;

(2) inoperability of disclosure;

(3 prior commercial use;

(4) anticipation by and want of patentable novelty over the prior patented art;

(5) want of utility; and

B. The Schletter patent is not infringed.

Argument.

Before taking up the specific points of argument we deem it desirable at the outset to meet and point out the error of three of the general contentions advanced in plaintiff's brief.

1. The first of these contentions is the alleged "commercial success" of plaintiff under the patent. In support of its assertions to this effect plaintiff advances the most extravagant statements, such as

> "the device has filled a long felt want"

(Brief, p. 36): that the need for the device

> "had existed for years, notwithstanding efforts in the industry to fill it"

(Brief, p. 32). These and similar statements bearing on alleged commercial success (Brief, pp. 14, 32-36) are not only unsupported by the record—they are completely and conclusively contradicted thereby.

Thus, we point out—

(a) that plaintiff itself proved in the *Hofmann* case (*Hofmann* Rec. pp. 338, 336) that a full size working machine was allegedly constructed by or for the patentee, and its construction completed by *September, 1921; but it was never commercially operated since its completion, nor were any additional machines like it, or intended for its purpose, built for more than six years thereafter;*

(b) that the first application for the patent for the machine was filed on *June 19, 1922* (as appears on the face of the patent in suit;

(c) that the application for the patent in suit was filed on *November 5, 1925* (as appears on its face);

(d) *that plaintiff did not put on the market its commercial device* (on which it predicates the claim to "commercial success", but which differs radically in many vital respects from the structure of the patent) *until August, 1927; and plaintiff did not acquire title to the patent until December 20, 1929, seven months after its issuance* (Rec. p. 77);

(e) that defendant's device, charged to constitute an infringement, was first sold on October 24, 1927, *over a year prior to the issuance of the patent; and without knowledge thereof* (Rec. p. 223).

From the foregoing the unreality and rash extravagance of plaintiff's assertions will be readily seen. The "long felt want" was supplied in 1921, but the "want" was, in fact, so non-existent that Schletter's full size commercial machine of 1921 did not turn a wheel from 1921 to the present date; *and plaintiff, who assertedly was familiar with the Schletter device from at or about the time of its completion in September, 1921, did not produce a single device until August, 1927, nearly six years thereafter, notwithstanding the fact that it was the largest manufacturer of machinery of this general character in the United States.*

Moreover, when plaintiff did produce its commercial device, on which its asserted "commercial success" is based, it was not the device of the patent but was something wholly and radically different therefrom in vitally important respects, as will be hereinafter pointed out (post, pp. 53-57). *It is not disputed in this case that plaintiff never manufactured a single structure like that shown in the patent.*

Finally, as this Court has frequently stated, *e. g., Paramount Publix Corp.* v. *American Tri-Ergon Corp.*, 294 U. S. 464, 474; it is only when "invention" is in doubt that commercial success may be thrown in the scale. Here there can be no doubt that no invention is disclosed in the Schletter patent; and there likewise can be no doubt that plaintiff's alleged commercial success has been with a device that is wholly different from and foreign to that disclosed by the Schletter patent.

2. The second contention of plaintiff that we desire to initially comment upon is that appearing on page 5 and elsewhere in its brief to the effect that the patent is for an "attachment". Plaintiff seeks to attach significance to that term. As is made apparent by the argument thereafter made by plaintiff, in considering prior art structures, the reason why plaintiff attaches significance to the term is that complete anticipation of the patent claims is found in the prior art structures (*e. g.*, the Lamb and Noon British patent, *post*, pp. 40-45), and the sole basis of attempted differentiation therefrom is the assertion that the structure of the patent in suit is for an "attachment" whereas the identical prior art structures were built into the machine as part of its initial fabrication. While, as a matter of fact, as will be hereinafter pointed out, plaintiff is in error even in this attempted differentiation, the matter is of no moment. A great many of the parts on modern knitting machines had their origin as "attachments" initially applied to machines as they existed prior to the date of the attachment. Thereafter, however, the so-called "attachment" became part of the machine, built therein during fabrication. The same is true in the present instance, for plaintiff itself now "builds in" its new machines the particular mechanism for producing cradle soles, and extravagantly asserts that it could not sell a machine without that mechanism (Plaintiff's brief, p. 14).

Moreover, none of the claims in suit describe the invention as an "attachment" and this was not an oversight. Schletter's solicitor deliberately refrained from so doing. The Patent Office Examiner, in his Office action of January 2, 1926, rejected claims which employed no language which gave any implication of an attachment, as distinguished from a "machine".* In response to this rejection the amendment of January 19, 1927 (on page 3 thereof) strenuously argued that applicant's real invention was for an "attachment" as distinguished from a machine. To this the Examiner replied, in his rejection of July 5, 1927 (*Hofmann* Rec. p. 237):

> "As to the use of an auxiliary pattern chain in this *attachment* should this device be claimed as an *attachment* to the existing *machine*, then such claims, including the extra chain, are on an entirely different basis than the present claims calling for a *machine* having the auxiliary chain. In the present claims the Examiner's position as to the extra chain is stated in the last Office action. Applicant states the utility of an extra chain with this attachment, *but an attachment is not claimed.*" †

The invention was never claimed as an attachment after this action by the Examiner, and an examination of the claims in suit reveals that they are not in terms or intent limited to an attachment for existing machines. Obviously, if the claims are valid, they would be infringed by mechanism built in as part of a knitting machine.

---

* The file wrapper of the Schletter patent in suit (Defendant's Exhibit J) was, by stipulation (Vol. II, p. 766), treated for the purposes of appeal as a "physical" exhibit because it had been reproduced in the appeal record in the *Hofmann* case, which was in evidence in the present case as Plaintiff's Exhibit 3. Thus, Defendant's Exhibit J in the present case will be found to be reproduced in the Hofmann record, Vol. II, beginning at page 207. The letter of January 2, 1926, above referred to, will be found on page 229.

† Italics ours in this brief unless otherwise stated.

3. Likewise, and for a similar reason, plaintiff attempts to give some unexpressed limitation to the term "flat" or "straight" knitting machine as used in the specification and claims of the patent. The specification states that the invention "generally stated" has relation to "flat knitting machines for making hosiery of full fashioned type" (p. 1, lines 1, *et seq.*).

Likewise (p. 1, line 45), an object of the invention is specified as providing the device of the patent "for a flat knitting machine" which is provided with a plurality of thread carrier rods and actuating mechanism therefor.

Again (line 59), an object of the invention is advanced as providing the device of the patent for "a flat knitting machine" provided with a plurality of thread carrier rods of particular construction and operation.

Finally (p. 1, line 81), the brief description of Figure 1 of the drawing contains the statement that the device of the patent is shown as applied to "one type" of full fashioned knitting machine known as the "Cotton" machine. It will be observed that all of the foregoing statements apply to and are descriptive of straight or flat knitting machines, irrespective of whether or not they are employed to manufacture hosiery, underwear or fabrics used for other purposes. It will likewise be apparent that the operation of the device of the patent would be the same, and possess the same alleged advantages on any and all fabrics manufactured on a flat or straight machine. In other words, the object of the invention is to supply mechanism which will create designs between the selvage edges of a fabric. It is obvious that the mechanism of the patent would perform that function on any flat knitting machine to which it was attached, and would do so wholly irrespective of whether or not the fabric was fashioned.

Thus, turning to the claims in suit, it will be seen that they are broadly and generically directed to a "straight" knitting machine, and are not limited, by intent or language, to such a machine used for producing hosiery fabric as distinguished from any other type of fabric; nor are they limited to "full fashioned machines", as distinguished from any other type of flat or straight machines. Likewise, the claims are not limited to any particular style of needle machine; or to the angle of disposition of the needles, vertically or horizontally.

In the knitting art the term "straight knitting machine" means any type of knitting machine in which the knitting needles are in a straight line (Rec., pp. 134 *et seq.*). In such a machine there may be a single or double row of needles, vertically or horizontally mounted. The needles may be operated simultaneously or consecutively. The terms "straight machine" and "flat machine" are synonymous, and are synonymously used in the patent specification.

In consequence, plaintiff's desperate effort to avoid the anticipating effect of identical structures of the prior art by reference to such features as the type of needles employed, the angle of the needles, the particular use of the fabric produced, and "fashioning" is not only unwarranted in fact but is wholly unsupported by the language employed in the specifications and claims of the patent.

In considering the claims of the patent, therefore, plaintiff quite brazenly (Brief, pp. 14-17, inclusive) attempts to read into all of the claims "an attachment" for a "Cotton" machine for making "full fashioned hosiery".

That, of course, cannot be done.

We will now take up consideration of the specific points of argument as outlined in the summary of argument.

POINT I.

The patent is invalid for failure to disclose the invention.

We have hereinbefore pointed out that the only asserted or actual contribution made by the patent over the concededly old Gotham attachment is the mechanism for rotating the reversely threaded spindle of the Gotham attachment selectively and automatically, by power, in *both* directions, as distinguished from in one direction. In other words, the invention of the patent is, and of necessity must reside in supplying the necessary mechanical instrumentalities for automatically and selectively rotating the reversely threaded spindle in *either* direction where theretofore this had been accomplished only in *one* direction.

An examination of the patent clearly shows that it is invalid on its face because it fails to show in its drawings, and fails to describe in its specifications, those necessary instrumentalities which alone comprise the asserted and claimed invention.

It is academic that the statutory pre-requisite to the grant of a valid patent is that *what is claimed as the invention must be shown and described*

> "in such full, clear, concise and exact terms as to enable any person skilled in the art or science to which it appertains or with which it is most nearly connected to make, construct, compound and use the same" (Section 4888 R. S.).

Considering this section of the Statute, this Court said, in *Beidler* v. *United States*, 253 U. S. 447:

> "Ever since *Grant* vs. *Raymond*, 6 Pet. 218, 247; 8 L. Ed. 376, 386, it has been consistently held that a

correct and adequate description or disclosure of a claimed discovery (which, in the case of a machine, involves particularly the operation of it) is essential to the validity of a patent, for the reason that such a disclosure is necessary in order to give the public the benefit of the invention after the patent shall expire."

Origin of disclosure in the abandoned application.

To demonstrate the want of disclosure of the claimed invention in the patent throughout its pendency in the Patent Office we start with the origin of the patent, namely, the abandoned application (Defendant's Exhibit K)* referred to in the patent (p. 1, l. 6). Referring to Figs. 1 and 2 of the drawings thereof it will be seen that they are identical with Figs. 1 and 2 of the patent (except in one respect which will be hereinafter mentioned). However, *no operative mechanism of any kind or nature whatsoever is shown for effecting operations of the pattern chain 70,* which selectively effects rotation of the spindle in *either* direction. Fig. 2 is a plan view of the machine where such mechanism, if it had been included in the concept of Schletter, would have been shown. Its complete omission was not inadvertent because reference to Fig. 1, which is a front view in elevation, shows that here, again, the drawing is completely devoid of any mechanism for that purpose. Fig. 3 is a view in end section, taken on the line 3-3 of Fig. 1, and

* The file wrapper of the abandoned Schletter application, Defendant's Exhibit K, was also treated for the purposes of appeal as a "physical" exhibit because it had been reproduced in the appeal record in the *Hofmann* case. Defendant's Exhibit K will be found in the *Hofmann* record (Vol. II, beginning at p. 449). The drawings, to which attention is directed, are reproduced on pages 471 to 475, inclusive.

looking towards the body of the machine. Here, again, if this necessary mechanism was included within the concept of Schletter it would necessarily have been depicted, but it is not.

Thus, it is clear and undisputed that the drawings of the application did not disclose this necessary mechanism.

Turning, then, to the specifications to see whether this defect was supplied by description (and it should be noted that the Statute expressly requires "description" of the invention in the specifications) we find that the only reference therein to this subject is contained in the following sentence:

> "To selectively engage the pawls 25 and 26 before referred to, and thereby determine the direction of rotation of the screw shaft 11, I preferably employ as shown, a second pattern chain 70, to which step by step movement is imparted by a cam shaft actuated lever 71 (see Fig. 6), studs 72 on said chain actuating spring pressed lever 73."

Thus, the description merely states the result desired, and fails to describe any mechanism capable of producing that result.

The first action of the Patent Office Examiner stated:

> "The means for actuating lever 71 should be shown and described." (*Hofmann* Rec. p. 463.)

This requirement was never complied with. On the contrary, even though two claims of the application had been indicated by the Examiner as containing patentable subject matter, the application was abandoned.

The disclosure by the patent in suit.

We next turn to the file history of the application for the patent in suit (Defendant's Exhibit J, reproduced in

Hofmann Rec. p. 207) which was filed nearly three years thereafter, and find that in the amendment of August 25, 1927, it was pointed out that the

> "mechanism of Figs. 1 to 10 is believed to be precisely identical with that in applicant's abandoned case 569,559 filed June 19, 1922".

This statement by Schletter's solicitor was not quite correct because one figure of the drawing, namely Fig. 1, showed in front elevation several undesignated elements which did not appear in Fig. 1 of the abandoned application (see the right end of Fig. 1 of the patent). It is left to one's imagination what these elements are, and what constitutes their structure, function and operation. They are not dignified with any reference numbers, and are not described or even mentioned in the specifications.

The only mention in the specification of any actuation of the auxiliary pattern chain is the verbatim statement above quoted (*supra*, p. 20) which merely states the desired result, without any description of how that result is accomplished, and without any mention of any mechanism necessary therefor (see patent, p. 3, lines 111 to 121 inclusive).

It is quite impossible for any one, even a skilled mechanic, to understand from the undescribed diagrammatic illustration of Fig. 1 just what mechanism was intended, or what its construction or operation was to be (Miller, Rec. fol. 206, p. 145; fol. 305, p. 213). Apparently neither Schletter, his solicitor, nor the draftsman knew what it comprised. This is made evident by the fact that it is not shown in the plan view of Fig. 2, or in the sectional view of Fig. 3, taken on the line 3-3 of Fig. 1 and looking in the direction of the arrows. If any such mechanism existed anywhere in fact, or with

any degree of completeness in the mind of Schletter, his solicitor, or the draftsman, its representation would have inevitably been made in these figures of the drawings.

This mechanism was absent from Schletter's machine.

Moreover, we find that the plaintiff produced in Court in the *Hofmann* suit what purported to be the original attachment constructed by Schletter in 1921, with all of the original parts that were available. *The parts that were not available were those that constituted the operating means for the selective mechanism, which parts, vital though they are, were the ones the patent neither disclosed nor described.* However, for the purposes of the *Hofmann* trial the necessary parts were supplied to the old attachment so as to make it complete, but plaintiff's expert in the *Hofmann* case admitted that the parts that had been supplied differed radically and essentially from anything disclosed in the patent (see Dahn's testimony, *Hofmann* Rec., Vol. I, pp. 106-128; note particularly XQs. 225-226, p. 129).

Another significant fact is that while the want of operable disclosure of this necessary and essential mechanism of the attachment was apparent on the face of the patent, and it was contended in the *Hofmann* case, as it is contended here, that Schletter never had a conception of an operable mechanism, Schletter, the patentee, although alive and residing in Philadelphia at an address known to the officials of the plaintiff company, was not produced as a witness in the *Hofmann* case (*Hofmann* Rec. p. 514), and was not produced as a witness in the present case. His failure to appear as a witness for plaintiff, in view of this defense, certainly cannot be excused because of the fact that he failed to comply with a "request" to attend (Rec. fol. 454, p. 314; fol. 469,

p. 325). He was subject to subpoena in both the *Hofman* case and the present case. It can only be assumed that he was not called as a witness because of the fact that his testimony would be, as the evidence indicates, that he never had a conception of the mechanism necessary for an operative device.

Plaintiff's failure to produce Schletter as a witness in either of the suits, under such circumstances, carries with it the legal presumption that his testimony on this vital part of the case would have been prejudicial to plaintiff. *Kirby* v. *Talmadge,* 160 U. S. 379; *Wigmore on Evidence,* Sec. 285; *Hill* v. *U. S.,* 234 Fed. 39.

Judge Avis in the *Hofmann* case rejected the attack on the validity of the patent on this ground of want of disclosure, with the statement:

> "This objection does not refer to the *idea* but only to *putting that idea into effect,* which, it appears to me, is not a material defect."

Of course, the legal difficulty with Judge Avis' conclusion will be readily apparent.

Contrary to the opinion held by Judge Avis, one cannot obtain a patent for *an idea.* The only thing that can be patented is the instrumentality by which the idea may be put into practice (*LeRoy et al.* v. *Tatham,* 14 How. 156; *Aron* v. *Manhattan Railway Co.,* 132 U. S. 85; *Minerals* v. *Butte,* 250 U. S. 349).

The Court of Appeals for the Third Circuit affirmed Judge Avis without mention of or comment on this subject (or, for that matter, of *any* defense in the case).

The Statute makes no exception to its mandatory requirement of complete disclosure and description of the invention sought to be claimed. The Statute specifically re-

quires *of the inventor* a description of the invention in "clear, concise and exact terms".

It was just this consideration which, many years ago, led this Court to hold, in *O'Reily* v. *Morse,* 15 How. 62, that the disclosure by the inventor should be so full and exact that one could

> *"by using the means he specifies, without any addition or subtraction from them, produce precisely the result he describes."*

Indeed, quite recently, this Court invalidated a patent before it which *disclosed* the claimed invention *in the drawings,* because of failure to comply with the statutory requirement of *describing* the invention in the specifications (*Permutit Company* v. *Graver Corporation,* 284 U. S. 52, 58).

The fact that the patent is insufficient in its disclosure, as charged, is self evident. Indeed, plaintiff in its brief finds it impossible to describe the operation of the structure of the patent from the patent itself, and, of necessity, must resort to a perspective drawing (Plaintiff's Exhibit 15, Rec., p. 366) and a small aluminum model (Plaintiff's Exhibit 11), both of which were prepared for the purposes of litigation (Plaintiff's brief, pp. 10, 11, 36, 37).

Effort is made by plaintiff to meet the obvious insufficiency of disclosure by the patent by the sole argument that the undescribed mechanism shown in the patent drawings is understandable "to those skilled in the art", and the perspective drawing and aluminum model were constructed in consequence. Aside from the fact that this argument, of necessity, avoids consideration of the statutory requirement for *description,* its fallacy will be clearly established from the following considerations.

In the first place, the undescribed disclosure of the patent was called to the attention of plaintiff's expert in the

Hofmann case, and he was asked what the structure was and how it worked. He ventured a "surmise" as to what the mechanism was and how it worked. However, *he was forced to admit that this surmise was merely his guess, was not supported by the drawings, nor by any description in the specification and, in fact, was flatly contradicted thereby* (*Hofmann Rec., pp. 122 et seq.*). How flat falls plaintiff's argument that the disclosure of the patent was sufficient to "those skilled in the art" when *it was insufficient to teach its own expert, who, incidentally, solicited the patent in the Patent Office.*

It was thereafter during the trial of the *Hofmann* case that *plaintiff's then patent solicitor,* Ischinger, created the perspective drawing which is here in evidence as Plaintiff's Exhibit 15, which purported to be a workable arrangement devised by him from the disclosure of the patent. *Ischinger's creation was wholly contrary and flatly contradictory to the structure and arrangement testified to by plaintiff's expert witness who had preceded him on the witness stand in the Hofmann case.*

The small aluminum model was made subsequent to the Hofmann trial, and prior to the trial of the present case. It follows the structure and arrangement in Ischinger's perspective drawing. But, it is one thing to manufacture a small aluminum model with long unsupported shaft and levers which can be operated *by hand,* and an entirely different thing to manufacture a large, practical, commercial machine in accordance with such unorthodox and impractical mechanical distortions, and defendant's expert pointed out the impracticability of a commercial structure built in accordance with Ischinger's ingenious creation (Rec., pp. 218 *et seq.*). And this is in no way affected by the fact that an experimental machine was allegedly constructed by plain-

tiff and testified to by its witnesses Meyer and Greiss, of which photographs are in evidence (Brief, p. 38). This machine was operated *ex parte* for the purposes of this case, *without affording counsel for defendant the opportunity of inspecting the machine.* Obviously it would not have withstood the test of *inter partes* examination.

Likewise, we point out that plaintiff's attempted excuse for the insufficiency of disclosure is in no sense aided by the testimony of its witnesses Hammel and Greiss, who professed a "clear" understanding of the mechanism shown in Figure 1 of the Schletter patent, because *both of them, prior to their testimony, were made thoroughly familiar with the Ischinger drawing and the small aluminum model.* In other words, their "clear" understanding was obtained, not from the patent, but from Ischinger's creation which is unsupported by the patent and contradicted by plaintiff's expert in the *Hofmann* case.

It follows, therefore, that the patent is invalid on its face for want of disclosure or description of the thing that is claimed as the invention thereof.

POINT II.

The patent is invalid for inoperability of disclosure.

This is a defense which was not presented to or passed on by the Courts in the *Hofmann* case.

What is shown and described in the patent does not operate, and is incapable of operation in the manner set forth. In fact, the attachment shown by the patent operates in a manner that is entirely contrary and fatal to the desired operation.

The mechanism is inoperative in two separate and vital respects. This is not a matter of dispute. It appears on the face of the disclosure of the patent, and plaintiff's expert Meyer concluded his admission as to the inoperative disclosure thereof with the statement (Rec. p. 85, fol. 125):

> "If you would construct a machine just as shown in the drawings you could not make anything at all. You could not even knit."

(1) The patent points out (p. 4, lines 63 *et seq.*) that it is absolutely essential to prevent the rotation of the reversely threaded spindle during the narrowing operation of the knitting machine. There is no dispute as to this necessity (see Meyer, Rec. pp. 84, 85). It is admitted in Plaintiff's brief, p. 39. If the reversely threaded spindle should be rotated during the narrowing operation the yarns would be cut off, necessitating the shutting down of the machine, and, probably, would ruin the fabric.

Therefore, the patent describes (at p. 4, beginning at line 46) mechanism which is provided *for preventing the rotation of the reversely threaded spindle during the narrowing operation of the machine.*

Turning to the drawings of the patent, however it will be seen that the reversely threaded spindle *will* rotate during the narrowing operation, and it is impossible, with the mechanism shown and described by the patent, for it to be prevented from so doing. This was unequivocally admitted by plaintiff's expert Meyer as he was taken step-by-step over the disclosure of the patent (Rec. pp. 84 *et seq.*; see also pp. 116, 117). The substance of the matter may be briefly summarized as follows:

During the narrowing operation the main cam shaft 5 (referring, for example, to Fig. 1) moves to the right.

Pausing here for the moment, it will be noted that if the cam shaft 5 did move to the right, the rollers of the cams 45, 51 and 14 (both of them) would fall off of the cams, without any possibility of their returning to the surfaces thereof, with the result that when the cam shaft 5 shifted back to its normal position these various parts of the machine would be broken (Rec. p. 146). The failure to show cams with an idle portion to avoid this possibility was not a mere inadvertence because cams of that character are shown at 34 and 35. These latter cams are the ones which are provided with cam surfaces 34a and 35a which actuate the mechanism for rotating the reversely threaded spindle 11.

It will thus be seen that when the parts of the attachment are in the position shown in Fig. 1 of the drawings, the rollers 30, 31, which control the mechanism for rotating the spindle 11, ride idly on the idling portion of the cam 34, 35. No rotation is imparted to the spindle 11 unless and until the rollers are moved to the left to be brought over the cam surfaces 34a and 35a or *unless the cam surfaces 34a and 35a are moved to the right to be brought under the rollers 34, 35.* When the shaft 5 is moved to the right it brings the rollers and cams in operative relation to each other. Thus, *the reversely threaded spindle is actuated every time narrowing occurs,* with the result that the mechanism shown by the patent, in addition to being absolutely impractical and unworkable, operates exactly contrary to what the patent itself recognizes *must* be its operation to be of any utility whatever.

Plaintiff attempts to cure this fatal defect of the patent by suggesting that narrowing cams (neither shown; described, nor mentioned in the patent) with which the full fashion machine is usually provided, could be used. Plain-

tiff does not state, nor can it state, *how* the use of any such cams would or could cure the defect.

The difficulty with this suggestion is that the *usual* narrowing cams are located at predetermined and fixed positions on the main cam shaft of the machine, so that *additional* narrowing cams (*i. e.,* in addition to the ones normally employed on the machine) must be provided and positioned where the alleged attachment is positioned. Thus, the narrowing cams which plaintiff would supply to the machine to permit operability of the attachment are, of themselves, *necessary parts of the attachment,* and are not shown, described, mentioned, or remotely suggested in the Schletter patent.

However, as above stated, the supplying of narrowing cams would in no sense cure the inoperability of the structure shown in the patent. Plaintiff does not and cannot point out *how* the supplying of such cams will prevent the rotation of the reversely threaded spindle during the narrowing operation of the machine, and it is quite obvious that they could not do so.

Plaintiff in its brief (p. 39) admits, as indeed it must, that this *must* be accomplished; and plaintiff likewise admits that with the structure and arrangement shown in the patent it cannot be accomplished.

(2) There is no way shown in the patent drawings, nor is there any mechanism described, to lift or take out of operation the stops (7) so as to permit idling of the yarn carriers of the machine that are used to produce the fabric panels. The idling of these carriers is absolutely necessary in order to produce the remainder of the stocking fabric after the fabric panels have been knitted. For example, the three carriers which are needed to knit the panels shown in Fig. 10 of the patent cannot be idled, *i. e.,* be pushed to one

end or the other of the needle bed—when it is desired to produce the remainder of the stocking after the design has been formed. In other words, no means are shown in the patent for changing over from split knitting to plain knitting after the lowest point of the design of Fig. 10 has been completed. With the mechanism shown by the patent such a change over, absolutely necessary though it is, is impossible.

At the point, or at least during the knitting of the first course below the lowest point of the design, and in all of the following courses, one of the carriers must knit across the entire width of the fabric, and to permit this the stop for the short stroke carriers *must* be taken out of the way.

Mr. Meyer, plaintiff's expert, admits that the patent drawings do not show any means for lifting the stops 7 out of action (fol. 126, Rec. p. 86).

Thus, it is seen that for this additional reason the mechanism of the patent is wholly inoperative for the purpose of producing the designed stocking leg for which it is presented as being especially provided.

Plaintiff also seeks to cure this deficiency by the knowledge of the imaginary "man skilled in the art" (Brief, p. 40). Plaintiff does not and cannot explain, however, how the co-ordinated and mechanically connected parts of the machine, *as shown and described in the patent,* can be modified to accomplish this.

Indeed, plaintiff places such great reliance on the knowledge of the "man skilled in the art" in supplying the many deficiencies—additional narrowing cams, reversal of timed operation of the spindle relative to narrowing operation, the necessary mechanism for selective automatic operation, the taking out of operation of the undercut stops, etc.—

that it is difficult to understand how that "man" could be seriously described as being so ignorant as to be unfamiliar with the prior well known utilization of the old automatically and selectively rotated reversely threaded spindle.

Indeed, the Court of Appeals below quite appropriately said (Rec. p. 772):

> "Thus he (Schletter) is involved in a not infrequent dilemma of inventors, who seek to incorporate a new element into an old combination. Either the working out of the conception was so plain that it required only common-place skill, or the specifications are insufficient because they do not give the necessary directions."

We submit, therefore, that the patent is invalid because of its inoperability in the two vital respects above considered.

POINT III.

The patent is invalid because of anticipation by and want of patentable novelty over prior commercial structures.

When a flat knitting machine is to be used for manufacturing a particular product it is provided only with such equipment, attachments, etc., as are of particular utility in the manufacture of that particular product. For example, in knitting unfashioned fabrics, the width of the fabric from selvage edge to selvage edge is the same throughout the length of the goods. Thus, after the width of the fabric is initially determined, the end stops (which control the over-all distance of travel of the thread carrier rods) are permanently adjusted, and the thread carrier travels the

full width of the fabric for each course of the machine throughout the entire length of the fabric.

In knitting "fashioned" fabrics, however, such as sweaters, underwear, etc., various portions of the fabric must be wider and narrower than other portions thereof. Thus, for example, in knitting a fashioned sweater, the fabric is wide at the shoulder, gradually narrows to the waist, and again widens at the hips.

Since the earliest days of the knitting industry this "narrowing" and "widening" has been effected automatically, under pattern-chain controlled power, by means of "fashioning mechanism" (see, for example, p. 42 of plaintiff's catalogue of 1920, Plaintiff's Exhibit 6).*

This mechanism contains two essential features. First, the end stops for controlling the travel of the thread carriers (to thereby control the *width* of the fabric being knitted) were made automatically movable in one direction or the other to widen or narrow the fabric, as determined by the pattern chain. This mechanism consisted of a threaded spindle at each end of the machine (or a reversely threaded spindle intermediate the ends thereof), with nuts thereon carrying or forming thread carrier stops against which the thread carrier or its rod contacted, to thereby limit its travel. The spindles were rotated *in one direction or the other* by suitable mechanism under the control of the pattern chain, from the main cam shaft of the machine.

The second essential feature of "fashioning" comprised the mechanism to transfer the loops to or from the particular needles which are put in or taken out of operation during the "fashioning". This was effected by means of movable rods, substantially the same in structure and operation

* This was likewise treated as a physical exhibit on appeal.

as the thread carrier rods, but which, instead of controlling thread carriers, controlled transfer or fashioning needles. However, these fashioning rods had to be varied in position in the same way and coincidentally with the variation in distance of travel imposed on the thread carrier rods by the end stops above described. Thus, and again referring to the old "fashioning" mechanism on page 42 of plaintiff's catalogue, the mechanism that was employed for this purpose consisted of a reversely threaded spindle on each section of which was mounted a nut which carried or formed a stop for the fashioning rods, and which spindle was automatically rotated in either one direction or the other, depending upon whether or not the fabric was to be narrowed or widened, its *time* of rotation and *direction* of rotation being controlled by one or more pattern chains of the machine.

In manufacturing full fashioned *hosiery*, fashioning is necessary only in one direction. In other words, the stocking blank is started at its widest portion, viz: at the top of the stocking, and gradually becomes narrower in width as it approaches the calf of the leg, and is still further narrowed as it approaches the ankle portion. Thus, in hosiery machines only the "narrowing" operation of "fashioning" has been required, and, in consequence, only the mechanism incident to "narrowing" has been essential, although the same or additional equipment incident to "widening" has always been *available if wanted.*

From the foregoing it will be seen that since the earliest days of the industry whenever it has been necessary or desirable to limit the travel of any of the rods of the machine (whether they were thread carrier rods, fashioning rods, or other parts) it has been customary to effect this by a reversely threaded spindle, with nuts traveling thereon,

carrying or forming stops against which the movable rods or parts contact. It will likewise be seen that it has been usual and customary to automatically rotate the spindles in either direction, under pattern chain control, by power supplied from the main cam shaft of the machines. *This is not disputed.*

Turning to the structure of the patent, therefore, it will be seen that there is complete identity between the mechanism there shown and the mechanism which preceded it for many years, operating in exactly the same way, to accomplish exactly the same result.

The Gotham attachment.

The Gotham attachment is a complete anticipation, element for element, of claim 1 of the patent in suit. Concededly it is an attachment used in connection with "straight knitting machines", and has "cooperating yarn guide carrier bars and a pair of opposed stops (8, see drawing Defendant's Exhibit T[1]) * with certain of the carrier bars which have a stroke less than the full width of the fabric being knitted, and a reversely threaded spindle (1, the reverse threads being shown at 2 and 3), for moving the stops towards and from each other to vary the stroke of the bars controlled by said stops".

When the Gotham attachment was made by duplicating the fashioning mechanism, the only reason why *exact* duplication was not made, specifically including selective rotation of the spindle in *either* direction, is because, for the particular purpose for which the attachment was intended (to make pointed heels) automatic rotation in one direction

* See *supra*, p. 6. The testimony and exhibits of the prior Gotham, Nusbaum and Kayser prior uses are stipulated in the present case from the *Hofmann* record.

alone was all that was necessary. To say that it constituted an invention to now supply the parts that, for purposes of economy, were eliminated in the Gotham attachment, and thus merely duplicate a combination of elements that is as old as the full fashioned knitting industry, is repugnant to common sense and to the principles upon which our patent system is based.

Indeed, the Patent Office Examiner expressly held, in effect, that Schletter's claimed invention was anticipated by and presented nothing patentable over Cotton British Patent No. 208,362 of 1922 (Defendant's Exhibit C[1], Rec. p. 704). The Cotton patent shows the Gotham type of reversely threaded spindle pointed heel attachment (the patent, of course, being many years subsequent to Gotham's use). This rejection was first made on July 5, 1927 (*Hofmann* Rec. Vol. 2, pp. 237-238); was repeated on September 6, 1927 (p. 253); *and acquiesced in by Schletter who then filed affidavits assertedly carrying his date of invention back of the effective date of the Cotton British patent.* As a result, the Examiner, in his Office action of March 28, 1928 (p. 267) expressly withdrew the Cotton patent as a reference. *It will be noted that Schletter admittedly can not carry his date of invention back of the Gotham 1912 attachment.*

The Nusbaum machine.

As proof of the fact that when anyone in the industry wanted to utilize the threaded fashioning spindles for controlling thread carrier rods instead of the fashioning rods, and to produce designs in the fabric between the selvage edges thereof, we refer to the prior use by the Nusbaum Company.

Defendant's Exhibit B^2 is a drawing of the mechanism of the Nusbaum machine showing the apparatus as it has existed since 1917 (reproduced Vol. II, p. 840). Defendant's Exhibit Y^1 are photographs of the actual machine which is still in use by the Nusbaum Company (reproduced Vol. II, pp. 830-838). Mr. Boch described the mechanism as shown on the drawing as follows:

At the left end of the machine is the threaded spindle A. At the right end of the machine is a reversely threaded spindle B. The nut on the left spindle is marked C, and the nut on the right spindle is marked D. The fixed stops put on the machine are marked E and F. The ground carrier rod G cooperated with the fixed stops. If the width of the fabric was to be made less, the distance between the fixed stops could be adjusted by means of the adjustable screw H. The carrier rod which effected the plaited design is shown at J, and this rod cooperated with the movable nuts C and D. This rod would traverse between said nuts. The pattern chain is shown at K, and this pattern chain, through the actuating mechanism of the machine would move the nuts C and D towards and away from each other for controlling the design which was made between the selvage edges of the fabric.

Boch produced samples of the work done by the machine (Defendant's Exhibit Z^1). He also produced various samples of designed cloth he had actually made in 1919 (Defendant's Exhibit Z^1).

Comparing this machine, which has been in use since 1917, with the claims of the patent in suit, it is quite ap-

parent that every element of each of the claims in suit is present in the Nusbaum machine, and that each element operates in the same manner and in the same relation to each other as specified in said claims. First, with reference to claim 1, it will be seen that it is a straight knitting machine having cooperating yarn guide carrier bars (J, see drawing Defendant's Exhibit B^2), stops (C and D) for certain of said carrier bars which have a stroke less than the full width of the fabric being knitted, and a reversely threaded spindle (A-B—the spindle is here formed of two pieces) for moving the stops towards and from each other to vary the stroke of the bars controlled by the stops.

Similarly, with respect to claim 3, the rotation of the spindle (both portions thereof) in either direction is automatically effected by the mechanism 3,3 which is controlled by the pattern buttons (K^1) on the pattern chain (K).

With reference to claims 14 and 15 Nusbaum did not use two independent pattern chains. If this is a valid element of differentiation between the Nusbaum machine and these claims of the patent, then defendant's machine cannot infringe because it employs only one pattern chain.

From the foregoing it is obvious that the Schletter patent is invalid in view of the Nusbaum machine, the construction and date of which is not disputed.

We submit as perfectly obvious therefore, that the decision of the Court of Appeals below to the effect that the patent in suit disclosed no invention over either the Gotham or Nusbaum devices was quite correct.

POINT IV.

The Schletter patent is invalid because of anticipation by and want of novelty over prior patented art.

The prior art patents are described and discussed by defendant's expert beginning at page 153 of the record. They show that not only was it old to produce fabrics with any desired designs between the selvage edges of the fabric, but also that the same mechanism as that shown in the Schletter patent was employed for that precise purpose.

Only two of the patents of the prior art will be discussed with any degree of detail, but an examination of the remainder of the patents will show that the alleged invention of the Schletter patent—the utilization of a reversely threaded spindle, selectively rotated in one direction or another to control and vary the travel of thread carrying rods on flat or straight knitting machines—has been utilized practically continuously throughout the history of the knitting industry.

Mather British Patent No. 7476 of 1837
(Defendant's Exhibit Q, Rec. p. 603).

This patent was not considered by the Courts in the *Hofmann* case. As stated in its title, the patent is directed to "Machinery for Knitting Stockings, etc." Certain features of the invention (as stated commencing in line 27, page 2) are drawn to apparatus for

> "conducting, carrying, or traversing the thread across the machine from side to side of the work, with suitable improved mechanism for determining the extent of motion of the 'thread carriers,' that is, effecting the shortening or lengthening of their tra-

> versing motions for the purpose of conducting the thread over a more or less number of 'needles' * * * together with suitable apparatus or mechanism for effecting the 'heeling' of the stocking, or dividing the making the fabric at this time into two, three, or more parts."

The machine is equipped with a pattern control mechanism in the form of a Jackguard which is universally known as equivalent to a pattern chain.

The means shown for accomplishing the stated objects consisted of a reversely threaded spindle (k), most clearly shown in Figs. 3 and 7, and a pair of nuts (i) are fitted thereto, one at each side of the spindle, so that when the spindle is racked in one direction, the nuts (i) will move toward each other, and when the spindle is turned in the other direction, the nuts will move away from each other.

Two carriers (a), as well as another carrier marked (b), are clearly shown in Figs. 1 and 2, and the carrier (b) in large scale in Figs. 6, 7, and 11. These carriers are traversed on a triangular-shaped guideway (d), Figs. 6 and 7; means at each end of the needle section, consisting of collars (f), varied in position by each of the nuts (1), are provided to cause the carriers to lay yarn over a varied number of needles, the stop means shown in the form of these collars (f) being used to not only limit the number of needles receiving yarn, but at the proper time to move the carriers to and from the needles, as early machines of the type herein shown had their needles fixedly positioned so that instead of the needles moving relative to the carriers, the carriers had to move relative to the needles, so that the carrier had to move transversely of the needles to produce a proper selvage.

Thus, this patent discloses a reversely threaded spindle with nuts and yarn carrier stops, stated as being usable to

decrease or increase the number of needles that receive yarn; there are a multiplicity of carriers, and the spindle means provided is intended to rotate in *either* direction to vary the travel of the carriers. Disclosure of the mechanism for racking the spindle in either direction is clearly made (commencing line 27, page 2). Rotation of the spindle was effected manually at this early date due to the fact that electric power was not then available. However, as we will see in connection with other prior art, when electrical power was available, power rotation thereof in both directions was supplied.

It will be seen, therefore, that since the earliest days in the industry it has been customary to use a reversely threaded spindle to limit and control the movement of thread carriers by means of a reversely threaded spindle rotated in either direction.

The Lamb and Noon British Patent No. 15129 of 1889 (Defendant's Exhibit X, Rec. p. 675).

This patent is likewise a complete anticipation of the Schletter patent. For the purpose of detail consideration thereof we direct the Court's attention to the simplified drawings thereof, reproduced directly from Figs. 3, 3A, 4 and 5 of the patent itself, and forming Defendant's Exhibit Z, in the present case (Rec. p. 693). The specification states (p. 2, line 16) that

> "This invention relates to an improvement in the knitting of hosiery with longitudinal or downright stripes"

and (p. 2, line 19)

> "We now propose to produce these downright stripes in a zig-zag form automatically."

The patent then states (p. 2, line 27) it is proposed

> "to give to the striping thread carriers * * * a continuous traverse on one side of the stripe until the required amount of deviation is reached and then to reverse the progressive traverse motion of the thread carriers."

It is obvious, therefore, that the patent purposes to use short-traverse thread carriers that have a varied stroke in *either* direction of traverse.

As stated (commencing with line 39, p. 2):

> "the striping thread carriers * * * are controlled by means of stop slides * * * to produce the irregular stripe, so racking in and out of the pattern, and certain other stops, as to give the several thread carriers the progressive motions required."

The machine of the patent therefore employs a multiplicity of thread carriers capable of producing designs inclined in both directions to the wales. This is made clear by reference to Figs. 3, 8 and 9 in which it will be seen that the zig-zag and other designs are located between the selvage edges of the fabric.

With further reference to the zig-zag design to be produced on the machine, the patent states (p. 2, line 54):

> "The slides (yarn carrier stop slides) will then be racked in the opposite direction, to shift the progressive motion of the thread carriers to the right until the requirements of the zig-zag pattern in that direction are reached. The racking of the slides will now again be reversed, and so on until the zig-zag stripe is completed."

The patent further states (p. 3, line 4):

> "The slides are racked in and out, as required, by a train of gear wheels, which impart an axial motion to the traversing screws of the slides."

These slides (F, Fig. 4) are fitted with a nut threaded to the "traversing screw." The traversing screw, of course, is a spindle.

The machine is shown as having five yarn bars, numbered 1, 2, 3, 4 and 5. In the particular type of fabric that is being produced in Fig. 3, the carriers 1 and 2 produce the fabric from the selvage to the designs, while the carriers 3 and 4 each form one of the two designs, with a carrier 5 producing the body fabric between the two designs.

It is obvious that the attachment of Lamb and Noon was not intended to produce merely one design, such for example as shown in Fig. 3, because other designs are illustrated in Figs. 8 and 9. To produce any desired design the proper carriers would merely be fitted with the proper abutments and stops.

The spindle for the slide (F) is rotated in a step by step manner by the rachet and pawl motion and a train of gears, just as the selvage formation in a regular full fashioned machine is automatically altered to produce wide and then narrow body fabric. The rachets have opposed teeth operated by suitable pawls (i2 and i3) which are connected to a roller lever (I2), said lever being automatically operable by contacting with a cam (I3) attached to the cam shaft of the machine, as shown in Fig. 5, in this manner making it possible to mechanically move the slide (F) either backward or forward, parallel to the carriers.

A pattern chain (I4) is provided with suitable levers and pawl control mechanism for determining which of the pawls (i2) and (i3) are to become active. The same mechanism is provided at the left end of the machine for controlling the stops against which the carrier (2) abuts in its traverse inwardly from left to right.

With the stop slide (F) capable of moving in and out automatically, it is clear how carriers (1) and (2) can knit shorter or longer courses.

In the construction shown by Lamb and Noon, therefore, we have a mechanism that is readily attachable to any straight knitting machine, and one that is specifically shown applied to a Cotton type machine in which spindles are used, certain of which rotate in either direction to varyingly stop carriers in accordance with a pre-selected design; all the parts are mechanically movable, and chain controlled for automatic operation.

Moreover, the patent states (p. 5, line 36):

> "it will be understood that the progress of the stripe may be continued to any desired length through the work. *If, however, it is desired to stop the striping, * * * the thread carrier bars not required for future use, are to be locked out in the usual way.*"

To this end, there are provided means for readily disconnecting the carriers from their driving means, so that any of them may be idled at the end of the needle sections.

The disclosure of the Lamb and Noon patent in this respect is striking in comparison to the disclosure of the Schletter patent in suit *which shows no means of any kind or nature whatsoever to permit taking out of action the pivoted stops 7, and their structure, as shown, prevents this.* The taking out of action of the stops is absolutely essential in order to produce the fabric shown in Fig. 10 of the drawings of the Schletter patent, as hereinbefore pointed out (*supra*, pp. 29, 30).

The Lamb and Noon structure is for *an attachment*, and it is shown for use in conjunction with the usual fashioning mechanism which likewise consisted of reversely

threaded spindles, as was customary in the art. All that Lamb and Noon did, in order to control the movement of thread carriers between the selvage edges of the fabric, was to duplicate the fashioning mechanism which theretofore was used in the machine for controlling the distance of travel of thread carriers from selvage to selvage. This is all that the Schletter patent in suit purports to do. Lamb and Noon duplicated the spindles, divided into two parts, located at opposite ends of the machine and simultaneously operated in either direction, which constituted one type of fashioning mechanism theretofore employed in the art, while Schletter merely duplicated the single spindle structure for the same purpose, and operating in the same way, which constituted another old type of fashioning mechanism in the art.

It should be noted, in addition, that the stop bracket (G—G¹), shown in the Lamb and Noon patent, stops carriers in *both* directions of traverse. This can be clearly seen by examining Fig. 3 in which the stop bracket G, which is mounted on the two-way racking spindle (F), stops the carrier (5) in its movement from right to left, and the carriers (3) and (4) in th movement from left to right.

Thus, in Lamb and Noon the stops are "opposed" stops.

It will be seen from the foregoing that the Schletter patent in suit is completely anticipated by the Lamb and Noon patent.

By the foregoing discussion of the Mather patent of 1837, and the Lamb and Noon patent of 1889, we have shown that since the earliest days of the knitting industry it has been customary to utilize reversely threaded spindles as an attachment to flat or straight knitting machines—

either formed in one piece positioned intermediate the ends of the machine, as in Mather, or in two pieces located at opposite ends of the machine, as in Lamb and Noon—selectively rotated in either direction, in the same way, and for the same purpose, to accomplish the same results, as is stated to comprise the invention of the Schletter patent in suit. Without going into a detailed description thereof we call attention to the following additional patents, from which it will be seen, by mere inspection, the same instrumentalities had been repeatedly utilized, operating in the same way, for the same purpose, throughout the history of the industry.

Roe British Patent No. 1991 of 1869, Defendant's Exhibit S, Rec. p. 631.

Willatt British Patent No. 573 of 1871, Defendant's Exhibit T, Rec. p. 644.

Woodward British Patent No. 19,627 of 1891, Defendant's Exhibit W, Rec. p. 671.

Sowter U. S. Patent No. 478,527 of 1892, Defendant's Exhibit N, Rec. p. 580.

Lieberknecht U. S. Patent No. 981,663 of 1911, Defendant's Exhibit N, Rec. p. 531.

In addition to the Lamb and Noon patent above discussed, we desire to list other instances of the prior art of record where attachments were provided for producing fabrics with designs intermediate the selvage edges thereof. These patents show, contrary to the contentions of the plaintiff, that it was not novel in the industry to produce such designated fabrics.

DePass British Patent No. 10,405 of 1884, Defendant's Exhibit R, Rec. p. 623.

Gee U. S. Patent No. 1,014,753 of 1912, Defendant's Exhibit N, Rec. p. 502.

Cecka U. S. Patent No. 1,180,568 of 1916, Defendant's Exhibit N, Rec. p. 469.

Summary.

It is submitted on the foregoing that the Schletter patent is wholly invalid as completely anticipated by and wanting in invention over the prior published art.

POINT V.

The patent is invalid for want of utility.

The basis for this statement is that the Schletter invention was expressly directed to producing a particular thing, viz: a split seam herringbone suture inclined to the wales. This was what was initially claimed as the invention. The structure as shown and described in the application is admittedly incapable of producing anything else.

An inclined split seam herringbone suture is concededly an impractical and useless thing.

It was only after Schletter's original application had been abandoned and his second application (which matured into the patent in suit) was filed that there was injected in the Schletter specifications any thought of a *spliced* fabric even though the mechanism shown and described was incapable of producing it.

In 1927 a new feature appeared in the market, namely the so-called "cradle soles" which, as the name implies, has to do only with the foot portion of the stocking (Rec. p.

224). It was not until the latter part of August, 1927, that the Schletter specification and claims were completely revamped in the most obvious effort to obtain a monopoly on equipment used for making cradle soles—a purpose not only unthought of by Schletter, but incapable of being accomplished by his apparatus. (See *Lopulco Systems* v. *Bonnot,* 24 Fed. [2d] 510.) It is defendant's machine, used largely if not exclusively for producing cradle soles, that is here before the Court under the charge of infringement.

For the purpose of conclusively establishing the foregoing facts it is necessary to review the metamorphosis of disclosure and claimed invention that occurred in the Patent Office history of the Schletter patent.

The first Schletter application.

On June 19, 1922, Schletter filed his first application for patent (Defendant's Exhibit K)* for "Improvement in *Split Seam* Mechanism for Full Fashioned Knitting Machine." A "split seam" fabric is radically different from a "spliced" fabric. A spliced reinforcement, such as was made by the old pointed heel attachments, employs a reinforcing thread *in addition* to the thread employed in making the body of the fabric, so that throughout the reinforced portion there are two threads. As distinguished from this a "split seam" fabric is one which is composed of several separate fabrics, each of which is made exclusively from its own individual thread, but they are knitted together at their edges by what is termed a "split seam suture."

Having in mind that the Schletter application, as its title emphasized, was for an improvement *in split seam mechanism*—an entirely different type of knitting opera-

* See *Hofmann* record, Vol. II, p. 449.

tion from that of splicing—it will be obvious that mechanism different in details of structure and operation from the old pointed heel splicing attachments would be required. These differences in structure and operation, from that shown by the Schletter application, were:

1. The spaced stops mounted on the reversely threaded spindle of the old pointed heel attachment were not caused, on each course of knitting of the machine, to move *pivotally* about their common axis. In the split seam device of the patent application, however, the spaced stops *must* rock about their common axis during each course of knitting of the machine. The mechanism for rocking the pivoted stops (illustrated in the application drawings by reference numerals 15, 16, 17 and 18) was described in the following language in the Schletter application:

> "The stops 7,7, as shown in the drawings, are pivotally carried at 8,8 in nuts 9,9, respectively non-rotatably mounted on the right and left threaded portions of the screw shaft 11 rotatably carried in fixed brackets 12,12 intermediate the length of the machine and rocking movement from and toward said rods is imparted to said stops by cams 14,14 on cam shaft 5 through levers 15,15 operated thereby and connected by rods 16,16 to a horizontal bar 17 slidably engaging in the rear extension 18,18 of the stops 7,7; *this rocking movement effecting the laying of the cross loops of the split seam and the depth of the undercut portion 10 determining the number of needles engaged thereby;* and rotary movement of the screw shaft 11 adjusting the position of said stops 7,7 in opposite directions".

It will thus be seen that the rocking movement imparted to the pivoted stops 7,7 is essential to the production of split seam fabrics.

2. The stops 7,7 were shown and described (for instance in the foregoing quoted portion of the specification) as being "undercut". This is a feature which is essential for the production of split seam fabrics with "herringbone" sutures with the mechanism of the patent application (Meyer, Rec. p. 125).* It is to bring the undercut portion of the stops into play that rocking movement is necessarily imparted to the pivoted stops. As compared to this, the old pointed heel attachments used solid, non-pivoted stops.

The specification of the Schletter application particularly stressed the utilization of stops of this particular character. They are referred to as "the *special* rod stops 7,7" (specification p. 3); and "the *special* stop employed in my improved attachment" (specification, p. 4); and the specification points out, at its end:

> *"My improved split seam stops, it will be understood, are employed only in producing fabrics having sections of separate yarns as shown in Fig. 10."*

The Schletter specification (p. 7) likewise pointed out that the type of fabric produced by "my oppositely movable *split seam stops"* is "more particularly described in my pending application Serial No. 451,785". Turning to this application (the file wrapper of which is in evidence as Defendant's Exhibit A)† it will be seen that it, in turn, is confined, throughout, to a *split seam* fabric with "herringbone" sutures.

As would be expected, in view of the foregoing, *each of the claims of the abandoned application was expressly limited to this split seam feature.*

---

* For a clear, detailed and undisputed description of a "herringbone" suture, and how it is produced, see Miller, Rec., pp. 268 *et seq.*

†*Hofmann* record, Vol. II, p. 323.

Of course, split seam sutures were old in the hosiery industry. They were employed for many years prior to 1922, and had been used very extensively in the art for supplying cotton soles to silk hosiery. In other words, it was an extensively used and old expedient to knit the sole of the stocking from cotton thread and connect the two edges of the fabric, thus formed, to the silk threads by means of a split seam suture. However, *split seam sutures of this type were always in a straight line parallel to the selvage, i. e., parallel to the wales.*

It was the asserted purpose of Schletter's invention, as disclosed in this application, to make "herringbone" split seam sutures *at an angle to the wales of the fabric,* in the same manner and with the same instrumentalities that this result was accomplished in splicing work by the old pointed heel attachment.

Herringbone split seam sutures had always theretofore been made in a vertical straight line for two reasons: In the first place, to produce a suture of this type it is necessary to provide in the machine alternate long and short nose sinkers over the area where the suture is to be placed. This arrangement, and the necessity for it, is not disputed and is clearly explained by defendant's expert Miller (Rec. pp. 187 *et seq.*). However, the use of alternate long and short nose sinkers throughout the entire width of the knitting head, such as would be necessary in order to produce, a herringbone suture anywhere between the selvage edges of the fabric, is impractical and impossible of utilization because of the very serious defects that would occur in the knitting of the stocking fabric, particularly in the sheer type of stocking on the market today (Miller, Rec. p. 194). The second and main reason why sutures of this type have always been in a straight vertical line is because of the fact that when a herringbone suture is inclined to the wales

of the stocking there is produced a drop stitch hole which will "run" and render the stocking useless and unmarketable (Rec. p. 195). This, likewise is admitted (Meyer, Rec. pp. 105 *et seq.*). Unquestionably the Court is familiar with "runs" in silk hosiery. If a thread is broken, or a drop stitch hole is produced, a "run", extending, or capable of extending the entire length of the stocking, results.

In consequence, and this is significant, there is no evidence in this case that there has ever been commercially produced by Schletter, plaintiff, or anyone else, commercial hosiery with a herringbone split design, *inclined to the wales of the fabric.*

Plaintiff's chief engineer and expert Meyer testified (Rec. p. 105):

> "Q. The plaintiff company never sold an attachment which made a herringbone type of suture on a bias to the wales did it? A. *They did not.*"

His testimony, immediately following, explains that the reason why they did not was because it produced the fatally defective drop stitch.

The patent, which is confined in its disclosure to mechanism which is capable of producing only a herringbone split inclined to the wales, in consequence, is completely devoid of utility.*

In all of plaintiff's commercial attachments it was necessary, in order to make the attachment of commercial utility, to depart from the disclosure of the Schletter patent and produce an entirely different type of suture. Thus, plaintiff's commercial attachments, where an inclination to the

---

* The second Schletter application showed the same mechanism that constituted the disclosure of the abandoned application. The *specifications* injected the new idea of producing *spliced* or *reinforced* fabrics which *the mechanism shown could not produce.*

wales of the stocking fabric was desired, produce a four needle lap suture (as distinguished from a herringbone suture) whereby the difficulty of the drop stitch hole incident to a herringbone suture (if inclined to the wales of the fabric), was obviated. But a four needle lap suture made a bulky seam in the stocking, especially in sheer hosiery. This, in itself, was a difficulty which plaintiff itself recognized. It required the later invention of one of its employees, Bitzer (see Bitzer Patent No. 1,938,207, Defendant's Exhibit E, Rec. p. 431; see also Rec. p. 107, fol. 154) to devise mechanism which would obviate this defect, and permit the production of a two needle lap suture, other than a "herringbone" which could be inclined to the wales of the fabric without producing a drop stitch hole. (See plaintiff's recent advertisement, Defendant's Exhibits B, Rec. p. 426; and C, Rec. p. 429.) With reference to plaintiff's advertisement (Defendant's Exhibit C) we particularly call attention to what is therein stated, that the attachment for

> "making a cotton sole and cotton cradle foot can now be provided with the Reading 2-Needle Closed Split Attachment. *This device (patent applied for) eliminates the 4-needle overlap which causes a bulky line where sole and instep are joined*".

Note, particularly, the recognition that attachments of this character are now used exclusively for split foot cradle sole work. Note, also, the recognition of the undesirability of the thick suture formed by the 4-needle lap, as compared to the 2-needle lap which the art demands, and has been supplied by defendant since 1928, and is incapable of being supplied by the Schletter device.

It follows, therefore, that the attachment shown and described by the patent is entirely wanting of any commercial utility, and the patent is invalid for that reason.

POINT VI.

The patent is not infringed.

Defendant's mechanism responds to claim 1 of the patent in suit in exactly the same way, and to the same extent that complete response thereof is found in the Gotham attachment. Likewise, claim 3 reads literally on defendant's attachment. However, literal application of the claim to the structure charged to infringe it is not the legal test by which infringement is determined. As was stated by this Court in *Westinghouse* v. *Boyden,* 170 U. S. 537:

> "The patentee may bring the defendant within the letter of his claims, but if the latter has so far changed the principle of the device that the claims of the patent, literally construed, have ceased to represent his actual invention, he is as little subject to be adjudged an infringer as one who has violated the letter of the statute has to be convicted, when he has done nothing in conflict with its spirit and intent."

See also *Cadwell* v. *Firestone Rubber Co.,* 13 Fed. (2) 483, affirmed C. C. A. Second, 23 Fed. (2) 1000; *Cinema Patents Co.* v. *Warner Brothers Pictures, Inc.,* 55 Fed. (2) 948, affirmed, 66 Fed. (2) 744.

A comparison of defendant's machine with the structure shown in the Schletter patent emphasizes the radical differences therebetween. The defendant does not employ pivoted stops which are rocked at each course of the machine to extend the travel of the thread carrier to "float" the thread. In consequence, it is incapable of producing a "herringbone" split seam suture, which is the only type of suture the attachment of the Schletter patent is capable of producing.

Defendant's device employs a stepped stop, but for a purpose radically different from that of the undercut stop of the Schletter attachment. The undercutting of the Schletter attachment is provided for the purpose of forming floating loops in order to produce the herringbone split.

In other words, in the Schletter device *on each course of the machine* the thread carrier hits the high part of the stop, is momentarily held there, and the stop then rocks, allowing the carrier to travel the additional distance of the undercutting. This allows the production of the "floating thread", an essential feature of a herringbone suture. As distinguished from this, defendant's structure employs a stop which *raises* (as distinguished from *"rocks"*) *only when the spindle is turned*. Moreover, it raises *before the carrier rod reaches it* so that the carrier rod has an *unobstructed and undelayed* additional travel the distance of the undercutting to give the thread carrier rod the same distance of travel in the course in which the spindle turned that it had in the preceding course. No floating threads are produced. It is by means of this expedient, which is radically different in concept, structure, mode of operation, and results produced, from anything shown, described or intimated by the Schletter patent, that defendant's attachment is enabled to produce an inclined two needle lap suture, of commercial acceptance, as distinguished from the inclined herringbone split suture of no utility whatever, of the Schletter patent.

Moreover, defendant's attachment differs from the Hofmann attachment in this same respect, with the result that this important and controlling consideration was not before or passed on by the Courts in the *Hofmann* case.

Likewise, the defendant's attachment is adapted to plait or splice. The attachment of the Schletter patent is wholly incapable of either of these operations.

The only things in common between the Schletter and defendant's attachments are the reversely threaded spindle with stops that move toward or away from each other under pattern chain control rotation of the spindle in either direction. In this respect, both of these attachments utilize the identical instrumentalities, operating in the identical way, to accomplish the identical result as in the numerous instances of the prior patented and commercial art hereinbefore discussed.

It is quite obvious, therefore, that under no principle of law, equity or logic can it be concluded that defendant's attachment has appropriated any novel feature disclosed in the patent in suit, or has infringed any claim properly construed to cover such novel feature.

What has been said above applies to claims 14 and 15 as well. Additionally, we call attention to the fact that these claims do not even literally apply to defendant's structure because defendant does not employ a *separate* auxiliary pattern chain for selecting direction of rotation of the spindle. A *single* pattern chain for determining both the time and direction of rotation of the spindle is employed by defendant.

Although the two separate, independent pattern chains are separately claimed as independent elements in claims 14 and 15, plaintiff charges infringement of these claims by the defendant's attachment.

Wholly apart from the violence such contention does to the accepted construction of patent claims, plaintiff is estopped from contending that anything short of *separate* pattern chains can find response in or constitute an infringement of these two claims. This is so because of the fact that in the first action by the Examiner of the Patent Office (dated January 22, 1926), the Examiner rejected claims which apparently differed from the prior art only by

the inclusion of the separate pattern chains. The Examiner said: *

> "Claims 6, 7 and 9 are held not to patentably distinguish by reciting a separate pattern chain to selectively engage the pawls. Pattern chains are well known to control various movements and the Examiner is unable to see any advantage derived by using two instead of one, inasmuch as an addition of the proper lugs to the first pattern chain would fulfill the purpose. If two pattern chains were used for convenience of location, which is the only explanation suggesting itself to the Examiner, then such a use is obviously devoid of invention. Furthermore, Lamb in Fig. 5 uses a pattern chain to selectively engage the pawls."

Schletter's attorney responded to this rejection on January 19, 1927, with this significant argument:

> "*Because the present device is an attachment for a conventional machine, the auxiliary pattern chain is essential,* otherwise the old machine would have to be reconstructed, whereas here applicant merely builds his parts and attaches them to the old machine parts as he finds them."

Apparently, it was as a result of this argument that claims like 14 and 15 which specify *two separate pattern chains,* such as described by the Examiner (but not employed by the defendant) were allowed. In view thereof, plaintiff is estopped from now taking a contrary position and construing claims 14 and 15 as not limited to the plain purport of their terms, namely, to *two separate pattern chains.*

In fact, on July 25, 1928, Schletter applied for a patent, which was granted on March 25, 1930 (Defendant's Ex-

---

* Reproduced *Hofmann* Rec. p. 229.

hibit F, Rec. p. 441), for the same reversely threaded spindle mechanism of the patent in suit, in which a distinguishing feature thereover was the utilization of a *single* pattern chain instead of the two pattern chains required by the patent in suit. This later Schletter patent states (page 1, line 10):

> "The structure herein shown has several advantages over that described in said patent (No. 1,713,628, the patent in suit) the first of which is that in the present instance *I require but one chain to operate both the ratchet mechanism and the reversing means therefor.*"

Reference to claim 10 of this later Schletter patent shows that this is specifically claimed as the invention. It should likewise be noted that the necessary operating mechanism for actuating the reversely threaded spindle in *either* direction is for the first time shown and described by Schletter in this patent which was applied for *after defendant's commercial attachment was on the market.*

It is submitted, therefore, that defendant's attachment does not embody any novel feature of the Schletter patent, or any feature to which Schletter is entitled to make claim, and does not infringe any claim of the patent.

Conclusion.

The patent in suit is neither valid nor infringed, wherefore the decree of the Court below should be affirmed.

Respectfully submitted,

SAMUEL E. DARBY, JR.,
WALTER A. DARBY,
Counsel for Defendant.

pp. 3, 4, 7

SUPREME COURT OF THE UNITED STATES.

No. 62.—October Term, 1937.

Textile Machine Works, Petitioner,
vs.
Louis Hirsch Textile Machines, Inc.

On Writ of Certiorari to the United States Circuit Court of Appeals for the Second Circuit.

[January 3, 1938.]

Mr. Justice Stone delivered the opinion of the Court.

This case comes here on certiorari, — U. S. —, to review a decree, in a patent infringement suit, of the Court of Appeals for the Second Circuit, which reversed the district court and held invalid Claims 1, 3, 14 and 15 of the Schletter Patent No. 1,713,628 of 1929, for an attachment for flat knitting machines. — F. (2d) —. The Court of Appeals for the Third Circuit had previously held these claims valid and infringed in *Alfred Hofmann, Inc.* v. *Textile Machine Works,* 71 F. (2d) 973. The patent is for an attachment for "flat" or "straight" knitting machines including machines of the "full-fashioned" type. By use of the attachment, as the specifications state, "yarn-guides can be accurately controlled to lay a yarn over a distance less than the full length of a course being knitted, as for reinforcing or for so-called split-seam work wherein sections of fabric are connected by suture seams." The attachment, it is stated, may be used for "fashioning designs, as clocks, upon hosiery."

Flat knitting machines are adaptable to use in the manufacture of full fashioned garments such as stockings, underwear or sweaters. A characteristic feature of the manufacture is that the garment, or a portion of it, is knitted in a flat web which, in the course of knitting, is shaped by variation of its width, in such a way that it conforms to the contour of the body to be fitted, when its shaped edges are united in a seam. The desired variations in width are secured through control of the traverse or "throw" of the yarn guide which brings the yarn to the needles of the machine as they knit the web. They may be and usually are set up as multiple units in a single machine capable of knitting simultaneously a number of garments of the same type.

The object of the patented attachment in providing accurate controls for yarn guides laying a yarn over a distance less than the full width of a fabric being knitted, is either to knit an additional yarn over a particular area of the main body of the fabric so as to strengthen it or form upon it an ornamental design, or to insert in it "split-seam work", which is a portion of the main fabric knitted with a separate yarn and forming a distinctive design. The attachment makes it possible to lengthen and shorten the throw of the yarn guide, and thus to form designs with reentrant angles in both reinforcement and split-seam work.

The patented device embraces a rotatable spindle having threads cut upon it, in reverse, on opposite sides of its central portion, with a nut mounted upon each of its two threaded parts and moved by its revolutions so that when the spindle is turned in the one direction or the other the nuts are moved by the reversely threaded screws toward or away from each other. Carried on the nuts so as to move with them are yarn carrier stops which are so adapted and located as to serve as controls to limit the travel of carrier rods which have mounted on them the yarn guides. The function of the mechanism is to control the movement of the stops which in turn control the distance of travel of the yarn guides. This is accomplished by the movement of the stop nuts toward or away from each other by the rotation of the threaded spindle in the appropriate direction.

Movement in conformity to a desired pattern is effected by the transmission of power from the main cam shaft of the knitting machine to two ratchet wheels mounted on the end of the threaded spindle, each with an actuating pawl. The two pawls are in such relationship that when one operates its complementary ratchet wheel the spindle will rotate in one direction, and when the other operates its complementary ratchet wheel the spindle will turn in the opposite direction. The operation of the ratchet wheels is controlled by means of buttons, arranged on two endless belts propelled by the main cam shaft. The buttons attached to one of the belts serve to actuate a mechanism which pushes both pawls. The buttons affixed to the other belt govern a mechanism that selectively engages one or the other of the two pawls, and thus determines the direction in which the spindle and hence the stops are to move. By suitable spacing of the buttons on the belts, the motion, which is to be imparted to the stops through the intermediate apparatus, is

controlled in such fashion as to fix in advance the length of throw and hence the outline of the design which is to be incorporated in the main fabric by reinforcement or split-seam work.

Claim 14, which may be taken as typical, defines the invention as the combination "In a straight knitting machine [a] a set of yarn guide carrier bars for operating yarn guides traveling less than the full width of the fabric being knitted, [b] a spindle having reversed screw threads, [c] stops operated by said spindle, [d] means for turning the spindle in either direction, [e] pattern-controlled means for determining the time of operation of the spindle, and [f] pattern-controlled means for determining the direction of rotation of the spindle."

As early as 1912, ten years before Schletter's original application of June, 1922, from which his patent dates, the art had devised an attachment for full-fashioned knitting machines, commercially used for reinforcing the heel portion of the stocking. One form, known as the Gotham, comprised a reversely threaded spindle, on the threads of which were mounted stops moving toward each other when the spindle rotated in one direction, and away from each other when the spindle turned in the opposite direction. The traveling stops controlled the throw of carrier bars with yarn guides which ~~lay~~ laid a reinforcing yarn at the heel of the stocking. As the reinforcement was triangular with the point above the heel gradually widening below without reentrant angles, it was needful to rotate the spindle automatically in but one direction in order to complete the pattern. When the reinforcement had been knitted the spindle was rotated by hand in the reverse direction, or "racked out", until the stops were restored to their initial position, ready to knit the next stocking. A means for automatically rotating the spindle in the desired single direction was provided by a ratchet wheel mounted on the spindle, which was worked by a pawl pushed by a cam on the main shaft; the operation of the pawl was controlled by a mechanism actuated by a "button" type of pattern belt or chain. The reinforcement could not be knitted from a single yarn carrier operating over a single area of the fabric, because the reinforced area was divided, in the completed stocking, by the seam which united the selvages of the stocking web. It was thus necessary to knit the reinforcement in two areas, using two yarn carriers, each with a throw of the desired variation in length, reaching from the selvage on either side of the

stocking web inward upon the main fabric. For this purpose the lugs on the carrier rods which, in cooperation with the stops, controlled the throw, were located between the end stops of the full-fashioned machine and the stops moved by the threaded nuts on the attachment.

It will be observed that this device, while not completely anticipating that of the patent, nevertheless exhibited every element of the claim except the "pattern-controlled means for determining direction of rotation of the spindle." This lack was supplied by Nusbaum, whose machine was in common use as early as 1917. As already indicated, the use of such a device in full-fashioned knitting machines to secure selvage variations was known long before the Schletter application. In order to effect this type of fashioning, the yarn carrier stops were moved and their movements controlled by stop nuts mounted on spindles with threads in reverse located at either end of the knitting machine. Two-way movement of the nuts was effected by mechanisms, under pattern belt control, suitable to rotate the spindle in either direction.

The Nusbaum machine was a modification of the existing flat knitting machine and was designed for knitting reinforcements of variable width on sweaters which were themselves not full fashioned, that is, not narrowed in the knitting. The modification was devised for varying the throw of a secondary yarn carrier supplying yarn to needles knitting upon the main fabric a reinforcement or plaiting. To accomplish this, Nusbaum rebuilt an old full-fashioned machine by using the existing end nuts as a means of controlling the movements of the stops which determine the length of throw of a secondary yarn carrier, and supplying a new carrier bar for the primary yarn. Since the garment was not full-fashioned he placed fixed stops at the ends of the machine so that the throw of the primary thread carrier was constant. He used the old automatically reversible spindle of the full-fashioned machine as a means, wanting in the Gotham mechanism, for increasing or diminishing at will the throw of the secondary yarn carrier. Instead of the single reversibly threaded spindle of the Gotham machine, Nusbaum retained the two threaded shafts located at the ends of the principal machine, each bearing twin ratchet wheels, each of which was operated by a pawl controlled through an intermediate apparatus by buttons appropriately spaced on a pattern

belt. Only a single belt was used bearing four rows of buttons, which by reversing the motion of the spindle as desired operated to vary the throw of the yarn carrier in conformity to the desired pattern.

It is true, as petitioner urges, that the threaded spindles were located at the ends of the Nusbaum machine, and that they were separate shafts although capable of being operated in unison as if united in a single spindle such as that shown by the Gotham attachment. Even with the double spindle synchronously operated instead of the single spindle of the Gotham it was substantially the device claimed by Schletter. In converting a full-fashioned knitting machine into a different type of straight knitting machine which did not fashion the main fabric, Nusbaum embodied in it a device for accurately controlling yarn guides for laying a secondary yarn less than the length of the course being knitted, which was capable of producing designs having reentrant angles. This, according to the specifications, is one of the objects to be achieved by the patented device. The other is the making of multiple designs and split-seam work.

As the pattern of the reinforcement or plait was to be wholly within a single area on the main fabric and did not extend to the selvage, Nusbaum used a single yarn guide instead of the two which were required in the Gotham attachment because the reinforcements were upon detached areas of the fabric. Hence his machine as set up could not do split-seam work or make double designs, which could only be knitted by employing a plurality of yarn guides with corresponding controls. But the use of the device for these different methods of knitting the secondary yarn involves but an obvious adaptation of the claimed combination to the particular work to be done. That may be accomplished by using the device exhibited by Nusbaum as well as that claimed by the patent, with the requisite number of controlled yarn guides in the case of multiple designs and with stops, both sides of which are used as carrier rod controls in the case of split-seam work. This addition of yarn guides and the varied use of the stops, even if invention, are not embraced in the claims before us.

The addition of the reversing mechanism, used by Nusbaum and previously used in the full-fashioned machine, to the elements exhibited by the Gotham, for the purpose of effecting variations in the throw of the secondary yarn carrier in precisely the manner in

which the throw of the primary yarn carrier had been controlled in full-fashioned machines, was plainly not invention. The addition of a new and useful element to an old combination may be patentable; but the addition must be the result of invention rather than the mere exercise of the skill of the calling, and not one plainly indicated by the prior art. *Electric Cable Joint Co.* v. *Brooklyn Edison Co.*, 292 U. S. 69, 79, 80; *Altoona Publix Theatres, Inc.* v. *American Tri-Ergon Corporation*, 294 U. S. 477, 486. The art of machine design in the knitting machine field is a highly developed one. The addition to the combination of the Gotham attachment of a means for automatically reversing the rotary threaded spindle to perform the very function it had performed in the full-fashioned knitting machine was not beyond the skill of the art and was plainly foreshadowed, if not completely anticipated, by Nusbaum.

The claims in suit do not embrace a train of mechanism of any particular type for the transmission of control from the power shaft to the pawls and so cannot rest on any differences between the train employed by Schletter and that of earlier devices. As the court below pointed out, if the patent is valid it is either because of the novelty of the conception of employing the Nusbaum device in an attachment for a full-fashioned machine, which Nusbaum had not done, or because of technical difficulties in executing that conception. If there were such difficulties, which could be overcome only by invention, Schletter did not show what they were or define such an invention by the claims before us. He did show in his specifications how to provide, by familiar mechanical means, for one necessary relationship of the attachment to the principal machine—the necessity that the threaded spindle remain stationary while the fashioning stops are moving. For this no invention is claimed, nor well could be in view of the state of the art.

Petitioner relies on the novelty of conception reinforced by an alleged commercial success. Commercial success may be decisive where invention is in doubt, but an insuperable obstacle to the invocation of that doctrine here is our inability, like that of the court below, to say "that an art which knew how to reinforce 'full-fashioned' webs without re-entrant angles, and straight edged webs with such angles, required some uncommon talent merely to conceive of combining the two, for, as we have said, the patent can only stand on the bare conception."

It is significant that the courts which, in *Textile Machine Works* v. *Alfred Hofmann, Inc., supra,* found invention, supported by commercial success, pointed to the novelty not of this conception but of adding to the elements of the Gotham machine the automatic pattern controlled means for reversing the screw spindle. But neither court made mention of the Nusbaum machine which supplied that element. Upon the record before us we cannot say that the commercial success is attributable to novelty of the bare conception of the use of the attachment with full-fashioned knitting machines rather than to the skill with which the patentee devised mechanisms for making the attachment effective, but for which he made no claim, or to the strength of the hands into which the patent came. Compare *Paramount Publix Corporation* v. *American Tri-Ergon Corporation,* ~~102~~ 294 U. S. 464, 474, with *Altoona Publix Theatres, Inc.* v. *American Tri-Ergon Corporation, supra,* 487.

Affirmed.

A true copy.

Test:

Clerk, Supreme Court, U. S.